

FEMALE ENTRANCE CANOPY NO: 2

MAIN ENTRANCE CANOPY NO: 1

ENTRANCE CANOPY NO: 3

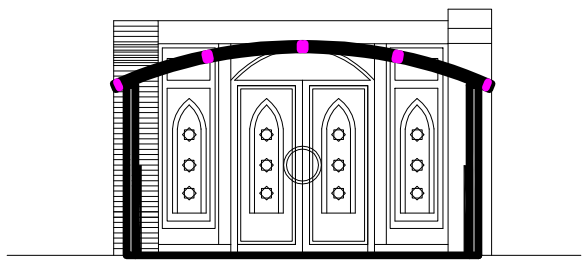

FEMALE ENTRANCE
ENTRANCE
CANOPY NO: 2
1/100

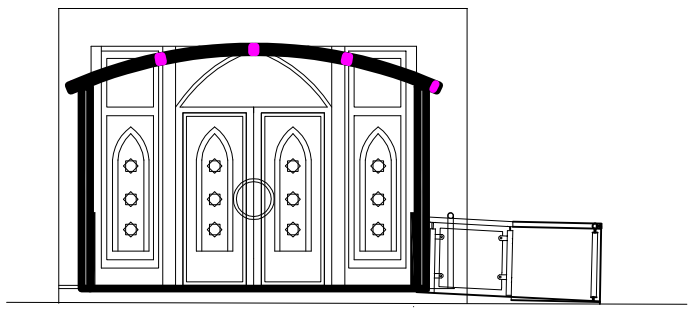

MAIN ENTRANCE
ENTRANCE
CANOPY NO: 1
1/100

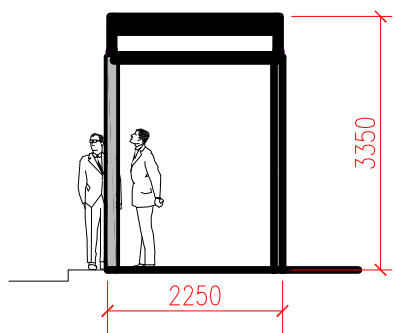

SIDE VIEW OF FEMALE
ENTRANCE CANOPY NO: 2
1/100

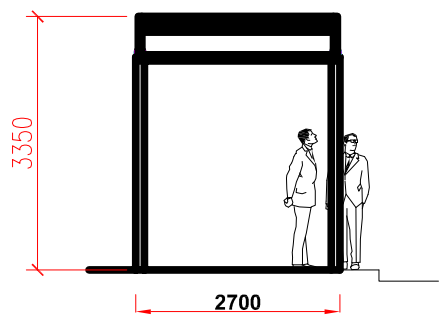

SIDE VIEW OF MAIN ENTRANCE
CANOPY NO: 1 1/100

PROPOSED

N.GEDAL
BA Hons Dip ARCH RIBA
ARCHITECT

REV A - 02/06/2019

CLIENT

Didsbury Mosque
Manchester Islamic Centre
271 Burton Road
M20 2WA

Architects
Najib Gedal Architects
4 Rutters Lane
Hazel Grove
Stockport
SK7 5AY
Tel: 0161-419 - 9757
najibgedalarchitects@hotmail.com

DRAWING TITLE

Proposed Canopies 1&2

DRAWING No BIS 02

SCALE 1:100 @A3
1:200 @A3

DATE 20.05.2018