Arboricultural Constraints Appraisal

in Relation to Proposed Demolition of Existing Building and Erection of a Replacement Building at

King David High School, Eaton Road, Manchester, M8 5DY

Prepared by:

Bowland Tree Consultancy Ltd

November 2018

CONTENTS

1. TREE SURVEY SCHEDULE & BS5837: 2012 TABLE 1
2. TEMPORARY PROTECTIVE FENCING SPECIFICATION
3. TREE CONSTRAINTS PLAN

Contact Details

Bowland Tree Consultancy Ltd
Unit 2
First Floor
11 Cannon Street
Preston
Lancashire
PR1 3NR

T: 01772 437150
E: info@bowlandtreeconsultancy.co.uk

Control sheet

Project No.:	BTC1674
Site:	King David High School, Eaton Road, Manchester, M8 5DY
Client:	King David High School
Council:	Manchester City Council
Survey Date:	7 November 2018
Surveyed by:	Jennie Keighley PhD MSc MArborA
Prepared by:	Jennie Keighley PhD MSc MArborA
Checked by:	Ryan Gledhill FdSc MArborA
Date of Issue:	8 November 2018
Version No:	1
Usage:	For agent to review and overlay with proposals (overlaid plan should then be issued to Bowland Tree Consultancy for review)

TREE SURVEY SCHEDULE FOR ARBORICULTURAL CONSTRAINTS APPRAISAL				
Site: King David High School, Eaton Road, Manchester, M8 5DY		**Surveyor:**	Jennie Keighley PhD MSc MArborA	**Page:** 1 of 1
Client: King David High School		**Survey Date:**	7 November 2018	
		Job Ref:	BTC1674	

No.	Species	Height	Stem Diam.	Branch Spread		Branch & Canopy Clearances	Life Stage	PC	General Observations and Comments	Management Recommendations	ERC	Cat. Grade	RPA (m²)	RPA Radius (m)
T1	Common Lime	22	670	N E S W	5 5 5 5	6-S 5	M	M	▪ Stem approximately 1.4m from wall of existing single storey brick building. ▪ Heavily crown lifted in past, having had all but one of primary branches in lower and mid-crown removed, resulting in substantially reduced mass damping ability. ▪ Numerous unoccluded pruning wounds up stem to a diameter of 200mm. ▪ Epicormic growths arising from many of pruning wounds.	▪	10+	C1	203	8.04
T2	Wych Elm	4.5	100#	N E S W	1.5 4 3 2.5	0.5 0.5	Y	P	▪ Located on neighbouring land and therefore not inspected in detail. ▪ Self-set tree growing at base of palisade boundary fence. ▪ Multi-stemmed from base, but with one dominant stem. ▪ Dominant stem recently topped at a height of 2.5m. ▪ Limited potential for future growth due to conflict with boundary fence.	▪	<10	U	5	1.2
G1	2no. Common Lime	≤ 16	≤ 630	N E S W	≤ 5 ≤ 7 ≤ 6.5 ≤ 6.5	3-NE ≥ 3	SM-EM	M/G	▪ Moderately closely spaced pair. ▪ Northern tree poorly pruned away from portacabins to north, with stubs to a diameter of 200mm and length of 1m left attached, the largest of which is now badly decayed. ▪ Southern tree has floodlight invasively attached to eastern side of stem at a height of 5m.	▪	20+	B1/2	≤ 180	≤ 7.56
G2	2no. Common Lime, 1no. Rowan	≤ 25	≤ 500#	N E S W	≤ 5 ≤ 5 ≤ 5 ≤ 5	5-N ≥ 1.75	EM	M	▪ Located on neighbouring land and therefore not inspected in detail. ▪ Moderately spaced linear group. ▪ Limes have been heavily crown lifted, resulting in high stem to crown ratios and reduced mass damping ability. ▪ Rowan is growing very close to boundary and has crown overhanging site by 5m with relatively low clearance.	▪	10+	C2	≤ 113	≤ 6

Headings and Abbreviations:

No.	Allocated sequential reference number - Tree ('T'), Group ('G'), Woodland ('W') or Hedge ('H') reference number - refer to plan and to numbered tags where applicable
Species:	Common name
Height:	In metres, to nearest half metre – where possible approximately 80% are measured using an electronic clinometer and the remainder estimated against the measured trees. In the case of Groups and Woodlands the measurement listed is that of the highest tree
Stem Diam.:	Stem diameter in millimetres, to nearest 10mm - measured and calculated as per Annex C of BS5837:2012. MS = multi-stemmed, TS = twin-stemmed
Branch Spread:	Crown radius measured (or estimated where considered appropriate) from the four cardinal points (north, east, south and west) to give an accurate visual representation of the crown
Branch & Canopy Clearances:	Existing height above ground level, in metres, of first significant branch and direction of growth (e.g. 2.5-N) and of canopy at lowest point – to inform on crown to height ratio, potential for shading, etc.
Life Stage:	Estimated age class - Y = young, SM = semi-mature, EM = early-mature, M = mature, PM = post-mature
PC:	Physiological Condition - a measure of the tree'(s)' overall vitality, i.e. D = Dead, MD = Moribund, P = Poor, M = Moderate, G = Good
General Observations and Comments:	Comments relating to the tree'(s)' overall condition and any other pertinent factors including structural defects, current and potential direct structural damage, physiological decline, poor form, etc.
Management Recommendations:	Either Preliminary or In Consideration of the Proposal - In the case of Arboricultural Constraints Surveys the recommended management works only take exiting site and tree circumstances and conditions into account and not proposed developments. Arboricultural Impact Assessment and Method Statement related Surveys take the proposed development into consideration with recommendations made accordingly. More than one option may be given if considered appropriate
ERC:	Estimated Remaining Contribution - in years as per BS5837:2012 (i.e. <10, 10+, 20+, 40+)
Cat. Grade:	Category Grading - tree retention value listed as U, A, B or C - in accordance with BS5837:2012 Table 1
RPA m²:	Root Protection Area in m² - calculated area around the tree that must be appropriately protected throughout the development process in order avoid root damage
RPA Radius (m):	Root Protection Area Radius - in metres measured from the centre of the stem to the line of tree protection
# (Estimated Dimensions):	Where trees are located off-site, or are inaccessible for any other reason, and accurate measurements or other information cannot be taken then the information provided is estimated and is duly suffixed with a "#" symbol

Bowland Tree Consultancy Ltd

BS5837:2012 Table 1 – Cascade Chart for Tree Quality Assessment

Category and definition	Criteria (including subcategories where appropriate)			Identification on plan
Trees unsuitable for retention (see Note)				
Category U Those in such a condition that they cannot realistically be retained as living trees in the context of the current land use for longer than 10 years	▪ Trees that have a serious, irremediable, structural defect, such that their early loss is expected due to collapse, including those that will become unviable after removal of other category U trees (e.g. where, for whatever reason, the loss of companion shelter cannot be mitigated by pruning) ▪ Trees that are dead or are showing signs of significant, immediate, and irreversible overall decline ▪ Trees infected with pathogens of significance to the health and/or safety of other trees nearby, or very low quality trees suppressing adjacent trees of better quality *Note: Category U trees can have existing or potential conservation value which it might be desirable to preserve; see BS5837:2012 paragraph 4.5.7.*			Red
	1. Mainly arboricultural qualities	**2. Mainly landscape qualities**	**3. Mainly cultural values, including conservation**	
Trees to be considered for retention				
Category A **Trees of high quality** with an estimated remaining life expectancy of at least 40 years	Trees that are particularly good examples of their species, especially if rare or unusual; or those that are essential components of groups or formal or semi-formal arboricultural features (e.g. the dominant and/or principal trees within an avenue)	Trees, groups or woodlands of particular visual importance as arboricultural and/or landscape features	Trees, groups or woodlands of significant conservation, historical, commemorative or other value (e.g. veteran trees or wood-pasture)	Green
Category B Those of moderate quality and value: those in such a condition as to make a significant contribution. A minimum of 20 years is suggested.	Trees that might be included in the high category, but are downgraded because of impaired condition. Examples include the presence of remediable defects including unsympathetic past management and minor storm damage	Trees present in numbers, usually as groups or woodlands, so they form distinct landscape features which attract a higher collective rating than they might as individuals. But which are not, individually, essential components of formal or semi-formal arboricultural features. For example, trees of moderate quality within an avenue that includes better, A category specimens. Or trees which are internal to the site, therefore individually having little visual impact on the wider locality	Trees with clearly identifiable conservation or other cultural benefits	Blue
Category C Those trees of low quality and value: currently in adequate condition to remain until new planting could be established - a minimum of 10 years is suggested - or young trees with a stem diameter below 150 mm	Trees not qualifying in higher categories	Trees present in groups or woodlands, but without this conferring on them significantly greater landscape value, and/or trees offering low or only temporary screening benefit	Trees with very limited conservation or other cultural benefits	Grey
	Note – Whilst C category trees will usually not be retained where they would impose a significant constraint on development, young trees with a stem diameter of less than 150mm should be considered for relocation			

DISCLAIMER

Survey Limitations: Unless otherwise stated all trees are surveyed from ground level using non-invasive techniques. The disclosure of hidden crown and stem defects, in particular where they may be above a reachable height or where trees are ivy clad or in areas of ground vegetation, cannot therefore be expected. All obvious defects, however, are reported. Detailed tree safety appraisals are only carried out under specific written instructions. Comments upon evident tree safety relate to the condition of said tree at the time of the survey only.

Unless otherwise stated all trees should be re-inspected annually in order to appraise their on-going mechanical integrity and physiological condition. It should, however, be recognised that tree condition is subject to change, for example due to the effects of disease, decay, high winds, development works, etc. Changes in land use or site conditions (e.g. development that increases access frequency) and the occurrence of severe weather incidents are also significant considerations with regards tree structural integrity and trees should therefore be re-assessed in the context of such changes and/or incidents and inspected at intervals relative to identified and varying site conditions and associated risks.

Where trees are located wholly or partially on neighbouring private third-party land then said land is not accessed and our inspection is therefore restricted to what can reasonably be seen from within the site. Stem diameters of trees located on such land are estimated. Any subsequent comments and judgments made in respect of such trees are based on these restrictions and are our preliminary opinion only. Recommendations for works to neighbouring third-party trees are only made where a potentially unacceptable risk to persons and/or property has been identified during our survey. Where significant structural defects of third-party trees are identified and associated management works are considered essential to negate any risk of harm and/or damage then we will first attempt to inform the site occupier of the issues and, if not possible, then inform the relevant Council. Where a more detailed assessment is considered necessary then appropriate recommendations are set out in the Tree Survey Schedule.

Where tree stem locations are not included on the plan(s) provided then they are plotted at the time of the survey using, where appropriate and/or practicable, a combination of measurement triangulation and GPS co-ordination. Where this is not possible then locations are estimated. Restrictions in these respects are detailed in the report.

The tree survey and any report information provided is intended as a guide to identify key tree related constraints to site development only. As such, the potential influence of trees upon existing or proposed buildings or other structures resulting from the effects of their roots abstracting water from shrinkable load-bearing soils is not considered herein. The tree survey information in its current form should not therefore be considered sufficient to determine appropriate foundation depths for new buildings. Accordingly, an updated survey, with reference to the current NHBC Standards Chapter 4.2 - Building Near Trees, must therefore be prepared for the specific purpose of informing suitable foundation depths subsequent to planning approval being granted. The advice of a structural engineer must also be sought with regard to appropriate foundation depths for new buildings.

Copyright & Non-Disclosure Notice: The content and layout of this report are subject to copyright owned by Bowland Tree Consultancy Ltd, save to the extent that copyright has been legally assigned to us by another party or is used by Bowland Tree Consultancy Ltd under license. This report may not be copied or used without our prior written agreement for any purpose other than those indicated.

Third Parties: Any disclosure of this document to a third party is subject to this disclaimer. The report was prepared by Bowland Tree Consultancy Ltd at the instruction of and for use by our client, as named. This report does not in any way constitute advice to any third party who is able to access it by any means. Bowland Tree Consultancy Ltd excludes to the fullest extent lawfully permitted all liability whatsoever for any loss or damage arising from reliance on the contents of this report.

Statutory Tree Protection: It is the client's responsibility to check for the presence of any statutory tree protection measures, such as the site's location within a Conservation Area and/or the presence of any Tree Preservation Orders, directly with the applicable Council's planning department prior to scheduling or carrying out any tree works. In turn, it is also the client's responsibility to check for the need for a felling licence with the Forestry Commission prior to scheduling or carrying out any tree works. Bowland Tree Consultancy Ltd cannot be held responsible for any decisions made by the client to prune or remove trees where any such statutory protection exists.

- TEMPORARY PROTECTIVE FENCING & GROUND PROTECTION SPECIFICATION -

Construction Exclusion Zones (CEZs), shall be enclosed by **Temporary Protective Fencing** and/or, where necessary, **Temporary Ground Protection Measures**. The fencing/ground protection Type(s), locations, and extents shall be agreed, in writing, with the Local Planning Authority (LPA). In turn, the **Temporary Protective Fencing** and/or **Temporary Ground Protection Measures** shall:

1. be constructed as in accordance with the Type 1, Type 2 or Type 3 'Temporary Protective Fencing Construction' sections and, where applicable the 'Temporary Ground Protection Measures' section, as detailed herein and agreed, in advance with the LPA;
2. be retained in place throughout the development process until completion of the project, and only removed following receipt of written permission from the LPA;
3. be sited in the area(s) defined by the Root Protection Areas on the associated Tree Impact Plan, or as the CEZs on the Tree Protection Plan;
4. be erected prior to any construction, demolition or excavation works and remain in place for the duration of the project;
5. preclude any delivery of site accommodation and/or materials and/or plant machinery;
6. preclude all construction related activity, with the sole exception of specified arboricultural works and any other works to be carried out under supervision that have been agreed by all parties;
7. preclude the storage of all development related materials and substances including fuels, oils, additives, cement and/or any other deleterious substance; and
8. be affixed with a 600mm x 300mm warning sign reading "TREE PROTECTION AREA KEEP OUT" (see Figure 1, below), at every 10.0 metre length of protective fencing.
9. Important: Any incursion into CEZs must be by prior arrangement, following consultation with the LPA.

Figure 1: CEZ Warning Sign

– TREE PROTECTION AREA –
KEEP OUT!

(TOWN & COUNTRY PLANNING ACT 1990)
THE TREES ENCLOSED BY THIS FENCE ARE PROTECTED BY PLANNING CONDITIONS AND/OR SUBJECTS OF A 'TREE PRESERVATION ORDER', THE CONTRAVENTION OF WHICH MAY LEAD TO CRIMINAL PROSECUTION

THE FOLLOWING MUST BE OBSERVED BY ALL PERSONNEL:

- THE PROTECTIVE FENCING MUST NOT BE MOVED
- NO PERSON SHALL ENTER THE CONSTRUCTION EXCLUSION ZONE
- NO MACHINE, PLANT OR VEHICLES SHALL ENTER THE EXCLUSION ZONE
- NO MATERIALS SHALL BE STORED IN THE EXCLUSION ZONE
- NO SPOIL SHALL BE DEPOSITED IN THE EXCLUSION ZONE
- NO EXCAVATION SHALL OCCUR IN THE EXCLUSION ZONE
- NO FIRES SHALL BE LIT IN THE EXCLUSION ZONE

ANY INCURSION INTO THE EXCLUSION ZONE MUST BE WITH THE WRITTEN PERMISSION OF THE LOCAL PLANNING AUTHORITY

Type 1 (i.e. 'Default') Temporary Protective Fencing Construction (see Figure 2, below)

1. Temporary protective fencing panels shall be weldmesh "Heras" panels of at least 2.0 metres in height.
2. The panels shall butt together and be securely fixed to a scaffold framework, as per points 3 to 5 of Figure 2, overleaf.
3. The scaffold framework shall comprise of upright poles of at least 3.0 metres in length driven no less than 0.6 metres into the ground at maximum 3.0 metre centres with horizontal and diagonal poles fixed to the uprights, as per points 4 to 5.
4. The two horizontal rail poles shall be attached to the uprights at heights of 0.6 and 1.8 metres with 3 no. clamps to each joint.
5. The diagonal scaffold pole struts be clamped to the top rail of the scaffold framework at a 45º angle and extend back into the CEZ and clamped to a 0.7 metre length of scaffold tube that shall be driven no less than 0.5m into the ground.
6. No fixing shall be made to any tree and all possible precautions shall be taken to prevent damage to tree roots when locating posts.
7. A 600mm x 300mm warning sign reading "TREE PROTECTION AREA KEEP OUT" (see Figure 1) shall be fixed to every 10.0 metre length of protective fencing.
8. On completion of erection, and prior to any demolition or construction works, site preparation, excavation or delivery of plant and materials, the Consulting Arboriculturist or the LPA Tree Officer, as agreed, shall inspect the Temporary Protective Fencing.

Figure 2: BS5837:2012 Default specification for protective barrier

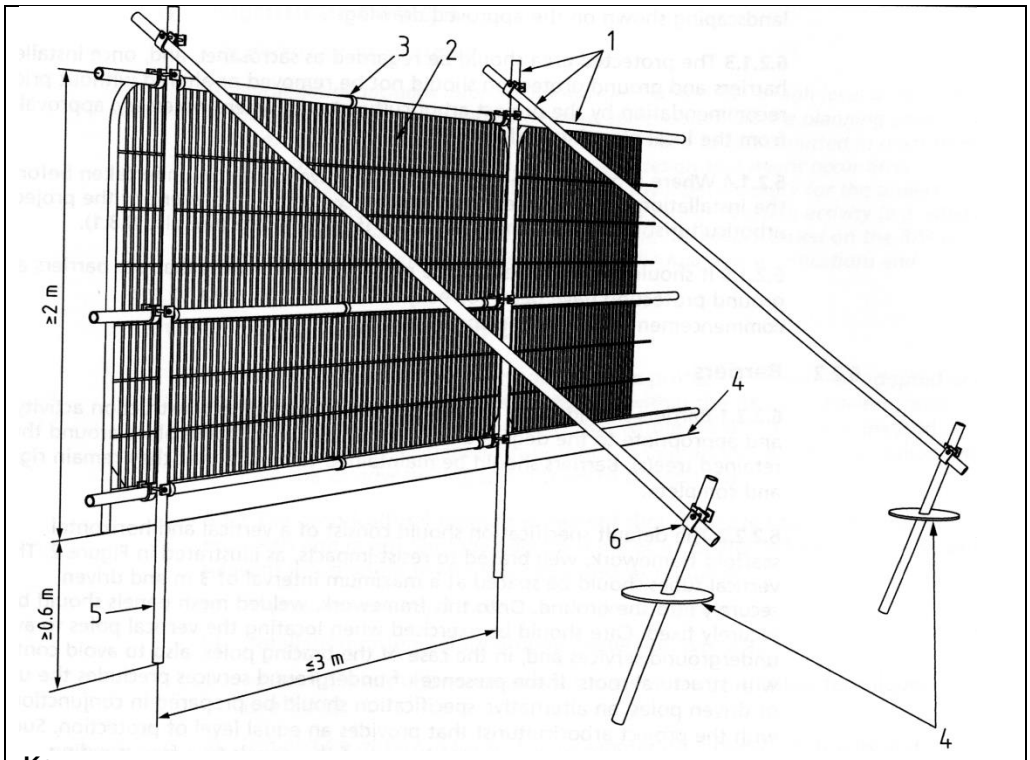

Key

1. Standard scaffold poles.
2. Heavy gauge 2 metre tall galvanised tube and welded mesh infill panels
3. Panels secured to uprights and cross members with wires ties
4. Ground level
5. Uprights driven into the ground until secure (minimum depth 0.6 metres)
6. Standard scaffold clamps

Type 2 Temporary Protective Fencing Construction (see Figure 3(a), below)

1. Temporary protective fencing panels shall be weldmesh "Heras" panels of at least 2.0 metres in height.
2. The panels shall stand on rubber or concrete feet.
3. The panels shall butt together, and be joined together using a minimum of two anti-tamper couplers, installed so that they can only be removed from inside the fence.
4. The distance between the fence couplers shall be at least 1.0 metre, and shall be uniform throughout the fence.
5. The panels shall be supported on the inner side by stabiliser struts, which shall be clamped to the scaffold framework at a 45º angle and extend back into the CEZ and shall be attached to a base plate, which shall be secured to the ground with pins (Figure 3a).
6. No fixing shall be made to any tree and all possible precautions shall be taken to prevent damage to tree roots when locating posts.
7. A 600mm x 300mm warning sign reading "TREE PROTECTION AREA KEEP OUT" (see Figure 1) shall be fixed to every 10.0 metre length of protective fencing.
8. On completion of erection, and prior to any demolition or construction works, site preparation, excavation or delivery of plant and materials, the Consulting Arboriculturist or the LPA Tree Officer, as agreed, shall inspect the Temporary Protective Fencing.

Figure 3(a): Type 2 Fencing (BS5837:2012 above-ground strut stabilising system with ground pins)

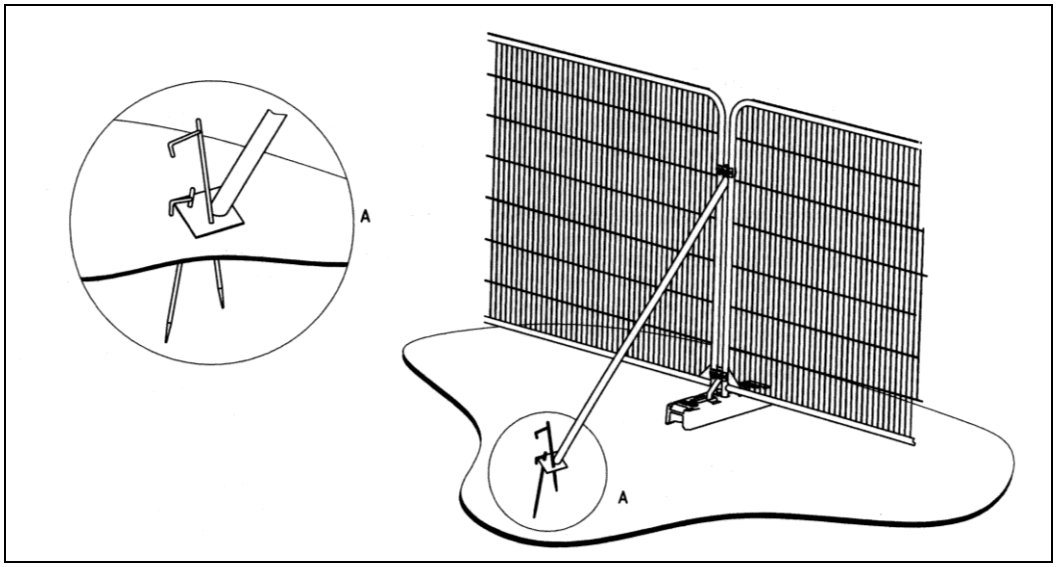

Type 3 Temporary Protective Fencing Construction (see Figure 3(b), overleaf)

1. Temporary protective fencing panels shall be weldmesh "Heras" panels of at least 2.0 metres in height.
2. The panels shall stand on rubber or concrete feet.
3. The panels shall butt together, and be joined together using a minimum of two anti-tamper couplers, installed so that they can only be removed from inside the fence.
4. The distance between the fence couplers shall be at least 1.0 metre, and shall be uniform throughout the fence.
5. The panels shall be supported on the inner side by stabiliser struts, which shall be clamped to the scaffold framework at a 45º angle and extend back into the CEZ and shall be attached to a block tray base (Figure 3b).
6. No fixing shall be made to any tree and all possible precautions shall be taken to prevent damage to tree roots when locating posts.
7. A 600mm x 300mm warning sign reading "TREE PROTECTION AREA KEEP OUT" (see Figure 1) shall be fixed to every 10.0 metre length of protective fencing.
8. On completion of erection, and prior to any demolition or construction works, site preparation, excavation or delivery of plant and materials, the Consulting Arboriculturist or the LPA Tree Officer, as agreed, shall inspect the Temporary Protective Fencing.

Figure 3(b): Type 3 Fencing (BS5837:2012 above-ground stabilising system with strut on block tray)

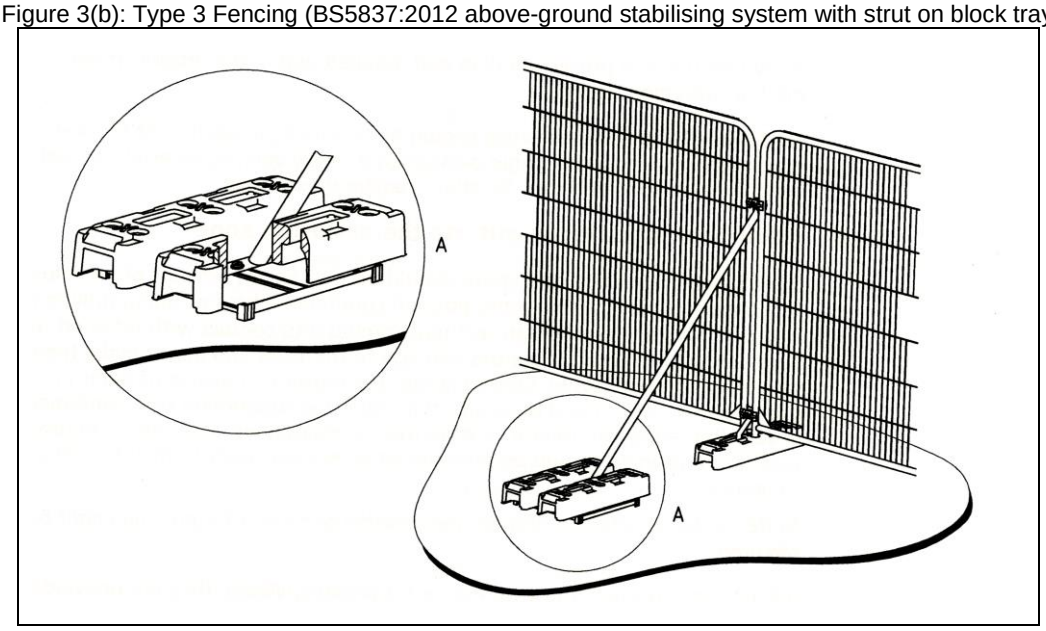

Temporary Ground Protection

1. Any necessary Temporary Ground Protection areas shall conform to Figure 4, below, unless otherwise agreed with the LPA.
2. The Ground Protection Area shall be left undisturbed and covered by a semi-permeable geotextile membrane which shall, in turn, be covered by a compressible layer consisting of a material such as woodchip.
3. Side-butting scaffold boards shall then be fitted to cover the Ground Protection Area.
4. On completion of installation, and prior to any demolition or construction works, site preparation, excavation or delivery of plant and materials, the Consulting Arboriculturist or the LPA Tree Officer, as agreed, shall inspect the Temporary Ground Protection.
5. The Temporary Ground Protection shall remain in place until completion of the project and only removed following receipt of written permission from the LPA.

Figure 4: Temporary Ground Protection – Recommended Construction

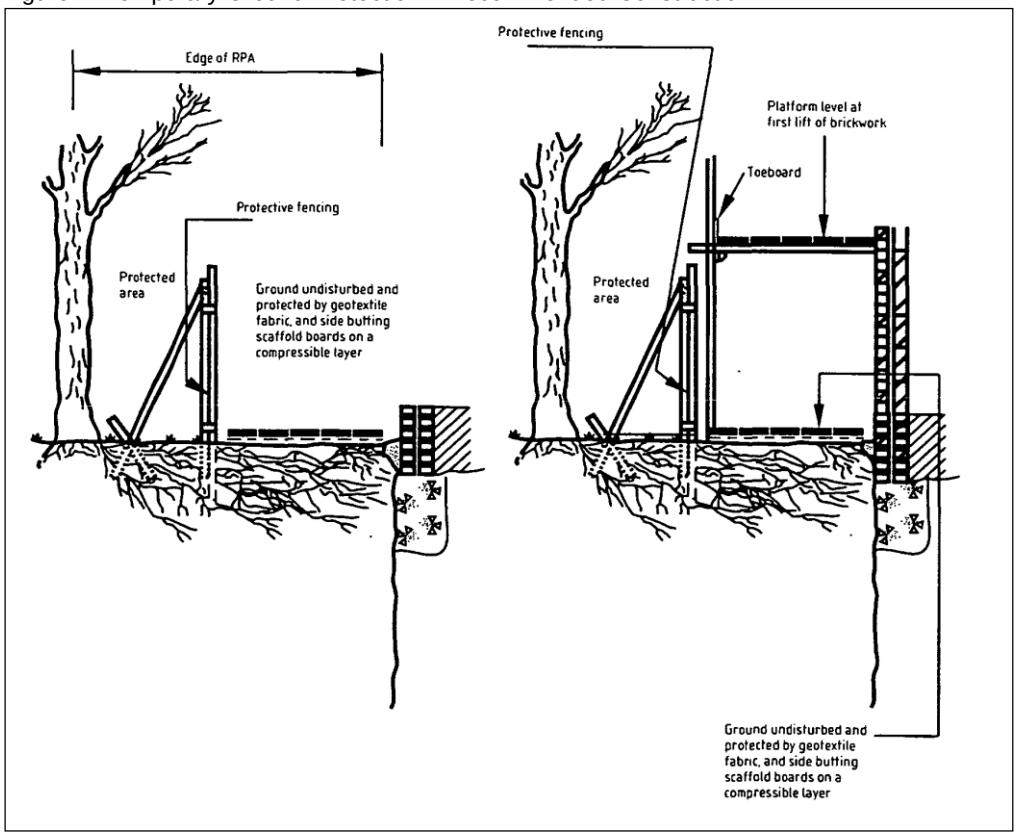

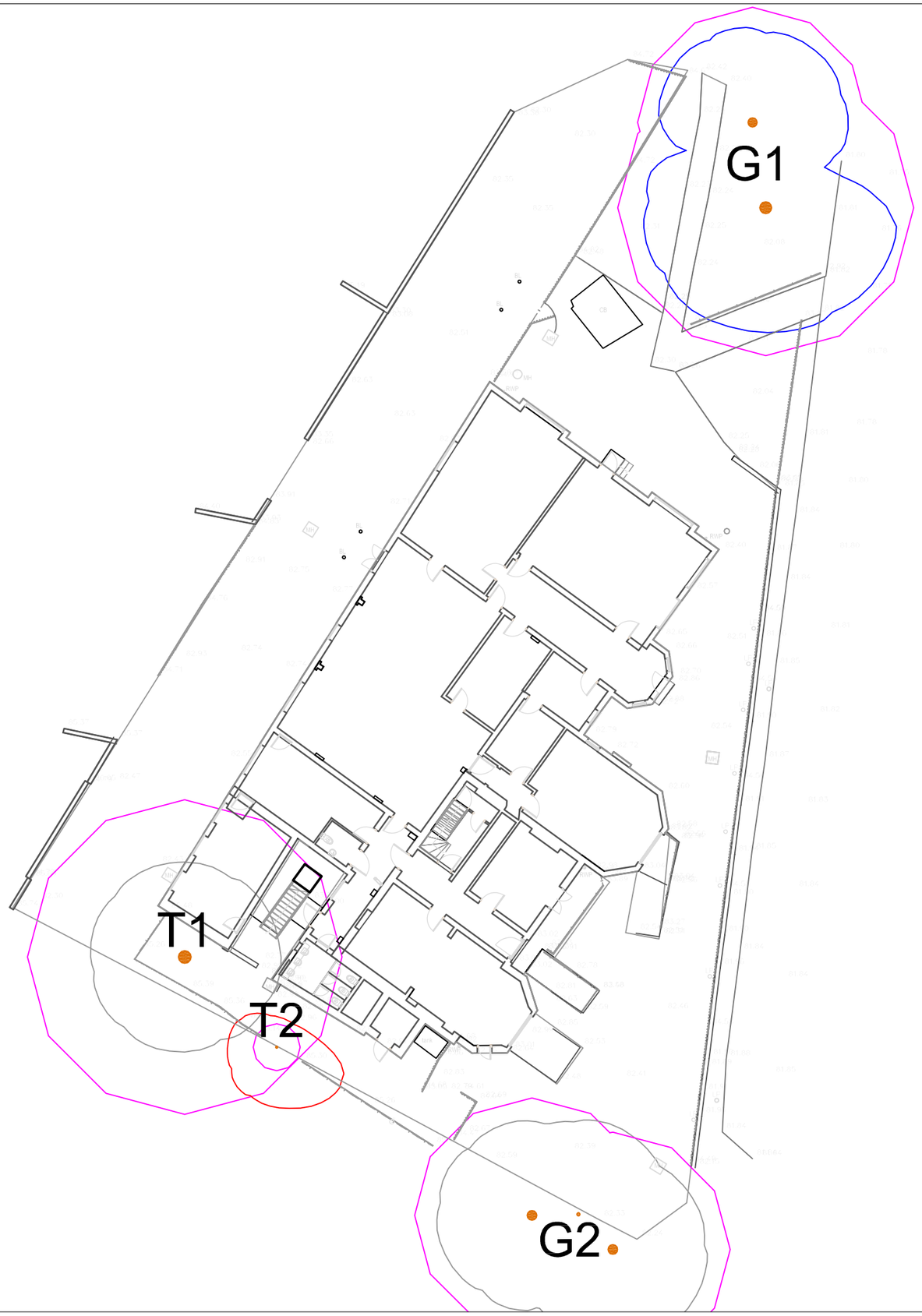

Important: The original version of this plan was produced in colour, which is essential to the plan's interpretation and usability. As such, a monochrome copy should not be relied upon

KEY

T = Individual Tree
G = Group of Trees

Please refer to associated Tree Survey Schedule for specific details in respect of items below:

Tree Categorisations:

Those to be Considered for Retention:

Category 'A' Tree/Group
Those of a High Quality with an Estimated Remaining Life Expectancy of at Least 40 Years

Category 'B' Tree/Group
Those of a Moderate Quality with an Estimated Remaining Life Expectancy of at Least 20 Years

Category 'C' Tree/Group
Those of Low Quality with an Estimated Remaining Life Expectancy of at Least 10 Years, or Young Trees

Those Considered Unsuitable for Retention:

Category 'U' Tree/Group
Those in Such a Condition that they Cannot Realistically be Retained as Living Trees in the Context of the Current Land Use for Longer Than 10 Years

Note: The stem locations of individual tree T2 and the trees in group G2 were not included on the topographical based site plan provided, and their locations were subsequently plotted by the arboricultural surveyor at the time of the survey using GPS siting and measurement from existing site features. As such, the plotted locations of these trees cannot therefore be considered to be wholly accurate

Root Protection Areas (RPAs):

RPAs
Area(s) of Ground Around Trees that Should be Protected Throughout Development Works with Protective Fencing to form a Construction Exclusion Zone - see Appended Fencing Specification

Project:
KING DAVID HIGH SCHOOL
EATON ROAD
MANCHESTER
M8 5DY

Client:
KING DAVID HIGH SCHOOL

Title:
TREE CONSTRAINTS PLAN
in Relation to Proposed Demolition of Existing Building and Erection of Replacement Building

Scale:	1:250@A3
Date:	November 2018
Drawn by:	JK
Checked by:	RG

Bowland Tree Consultancy Ltd
e: info@bowlandtreeconsultancy.co.uk
t: 01772 437150

Ref: BTC1674-TCP Rev: