

EXISTING SIDE ELEVATION
scale 1:100

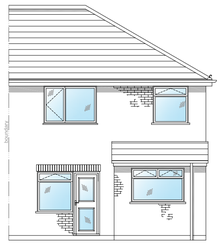

EXISTING REAR ELEVATION
scale 1:100

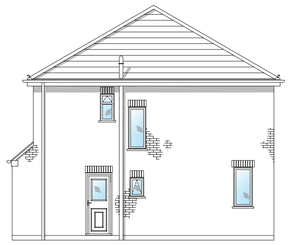

EXISTING OPP' SIDE ELEVATION
scale 1:100

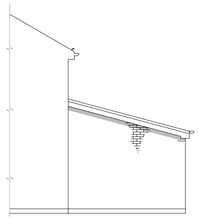

PROPOSED SIDE ELEVATION
scale 1:100



PROPOSED REAR ELEVATION
scale 1:100

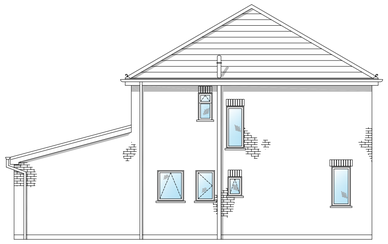

PROPOSED OPP' SIDE ELEVATION
scale 1:100

Install 50x170 SC3 rafters at 400mm ctrs. to be secured top & bottom using truss clips
Approved reinforced breathable roofing felt (Tyvek Supro) to BS 747:1961 draped between rafters with 150mm min, laps secured with clout nails, Install 120mm deep Celotex XR4000 between rafters leaving min 30mm gap for drape of felt.
Provide a further 25mm thick layer of Celotex TB4000 under rafters, tape joints to create vapour control layer and air leakage barrier to underside of rafters, finish underside with 12.5mm Knauf Wallboard or 15mm plaster and skim.

WALL CONSTRUCTION:
Cavity wall comprising of: 103mm facing bwk. to match existing, 100mm cavity filled with Crown DriTherm34 cavity wall insulation board; stainless steel wall ties (5 No. per m² & at staggered ctrs.- double up wall ties around all opening reveals); 100mm Thermalite Turbo concrete block inner skin; dense conc. foundation blocks or common bwk. below g.l. with fine conc. cavity fill terminating 225mm below dpc; Hiload pitch polymer dpc. min 150mm above g.l. for both skins; Lap & seal inner skin dpc to floor dpm. 100 x 75mm wall plates tied to inner skin with 38 x 5mm galv. steel straps spanning 600mm of wall & at 2m ctrs. Galv. steel lintels by Keystone Lintels Ltd. With cavity tray dpc's over & external weep holes New brickwork to be bonded to old using wall ties or similar approved method. Intersecting walls to create continious cavities.
All openings in external cavity wall to have vertical dpc's; cavity wall will be closed around all openings & at plate level with special PVCu insulated cavity closures by Thermabate or similar & approved to prevent cold bridging; ensure cavity wall insulation board terminates 150mm below finished floor level; ensure that no mortar snots or other debris fall between cavity board to bridge skins of wall. Finish internally with 12.5mm plaster and skim. Ensure cavity wall insulation abuts roof insulation to reduce cold bridging

GROUND FLOOR CONSTRUCTION
Laid level with existing using tiles or ashfalt finish on 150mm thickness concrete on polythene separation layer on 100mm thick Celotex GA4000 insulation on, 1200 gauge Visqueen damp proof membrane on 50mm sandblinding, finished fully level & smooth; 150mm layers of clean & sulphate free consolidated hard-core to a maximum depth of 600mm.
All new hard-core must be clean & free of all wood, vegetation etc. Second-hand hard-core shall not be permitted.
NOTE 1:- Should new floor cover existing air bricks for sub-floor ventilation, then the existing air bricks are to be ducted to new air bricks on new external wall to maintain cross ventilation.

NOTE 2:- Provide perimeter insulation to exposed walls by installing 20mm Kingspan Thermafloor TF70 zero ODP perimeter insulation upstand insulation strips for the depth of the screed at the abutment of the screed to wall junctions.

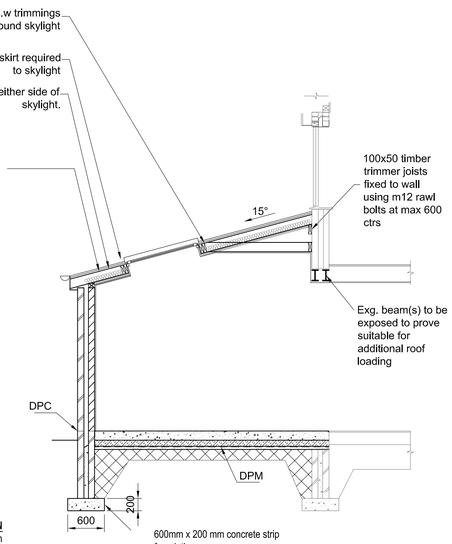

SECTION A-A
scale 1:50

1. Do not scale the drawings.
2. Figured dimensions only are to be taken from the drawings. All dimensions & angles are to be checked on site prior to any work. If in doubt ask.
3. The drawings are metric drawings & all dimensions are in millimetres (unless otherwise stated).
4. Report any discrepancies to Pro-TECH immediately.
5. All drawings are to be read in conjunction with other related information &/or relevant Consultants drawings where applicable.
6. This Specification & the design drawings are copyright & must not be copied without the written consent of Pro-Tech.

7. Electrics: Lights and sockets to clients specifications and I.E.T.Regs. All electrical work required to meet the requirements of Approved Document Part P (Electrical Safety) and must be designed, installed, inspected and tested by a person competent to do so. Prior to completion, the Building Control Consultant needs to be satisfied that Part P has been complied with. This may require an appropriate BS7671 electrical installation certificate to be issued for the work by a person competent to do so. 75% of all new light fittings to be energy efficient.

8. Timber: All timber to be stress graded and stamped, kiln dried (KD).

9. Windows/Ventilation: New windows to achieve minimum 'u' values of 1.6 W/m²k with minimum 20mm gap between panes in timber or PVCu sealed units and have maximum total area 25% of total floor area. Ventilation provided by opening lights of 1/20th minimum floor area and minimum 8000mm² trickle vent in window head. Lintels over windows/doors to be Keystone type requiring 150mm end bearing unless noted otherwise and have half hour fire protection using 2 No. layers of 12.5mm plasterboard and plaster skim finish. Keystone lintels filled, full length, with polystyrene insulation. Draught proof stripping to fitted to all opening windows and any loft hatch. All glazing in critical locations on internal and external walls must to conform to BS EN 12150, protection against impact, i.e glazing below 800mm and up to 1500mm in doors extending 300mm horizontally each side.

10. Roof: Tiles to be Mendip Interlocking tiles with 100mm headlap to match existing as closely as possible and to suit a 15° pitch on 50mm x 25mm treated soft wood battens, fixed with wire nails. Approved reinforced breathable roofing felt (Tyvek Supro) to BS 747:1961 draped between rafters with 150mm min. laps secured with clout nails, on timber rafters fitted to 100mm x 75mm timber wall plates using pressed steel brackets. Wall plates fixed to walls at 1500mm centres using 30mm x 5mm mild steel straps spanning 600mm of wall, mild steel straps to gable wall to be fixed across first 3 rafters at max 2000mm ctrs. All ridge and hip tiles are to be mechanically fixed to the roof. Fascia boards to match with existing. Ceilings to be 12.5mm plasterboard with plaster finish. All flashings to have a minimum 150mm upstand using code 4 lead flashing. Provide lead flashing where new roof abuts walls (stepped if required). Provide cavity trays where roof abuts wall.

11. Drainage: 115mm PVC guttering to 64mm dia. PVC downspouts as shown to B.I.G's to be connected to existing drainage to be agreed by building control officer. Drains beneath proposed building to be incased in 200mm concrete, with flexible joints incorporated in new concrete to suit ground conditions and to the satisfaction of the Building Control Officer. Walls to bridge drains using reinforced concrete lintels leaving a 50mm clear gap below filled with approved compressible sealant, masked over at both sides of wall with rigid none degradable sheet material. Sanitary ware to be fitted with 75mm deep seal traps with rodable access to be connected to soil stacks or B.I.G via 40mm dia p.v.c piping. To prevent cross flow, connections to SVP must not be directly opposite. Any bath is to be limited to 48°C via an inline blending valve which is to be compatible with hot and cold sources.

12. Kitchen Ventilation
The requirement will be satisfied if there is both:
(i) Mechanical extract ventilation for rapid ventilation, rated capable of extracting at a rate not less than 60 litres per second (or incorprpated within a cooker hood and capable of extracting at a rate of 30 litres per second), which may be operated intermittently, for instance during cooking;
and
(ii) Background ventilation, either;
(a) by a controllable and secure ventilation opening (or openings) having a total area not less than 4000sq. mm, located so that to avoid drafts, eg. a trickle ventilator, or
(b) by the mechanical ventilation being in addition, capable of operating continuously at a nominally one air-change per hour.

Heating:
New rooms to be heated using rads fitted with thermostatic radiator valves. Fed from exg. boiler
Any alterations to heating /hot water system to be carried out by Gas Safe registered plumber. Any new boiler to be condensing boiler with balanced flue and full controls should be incorporated.

Box lintels:
Box/K-100 Lintels by Keystone or similar approved beams requiring 150mm end bearing, to be given ½ hour fire protection via 2 layers of 12.5mm plasterboard.
Box lintels to have a minimum of one course of blockwork or 2 courses of brickwork between lintel and joists to prevent point loading from joists.

Escape Window(s):
To have an unobstructed opening of at least 0.33m²
and at least 450mm (w) x 735mm (h)
The bottom of the opening should be not more than 1100mm and not less than 800mm above floor level.

EXISTING GROUND FLOOR PLAN
scale 1:50

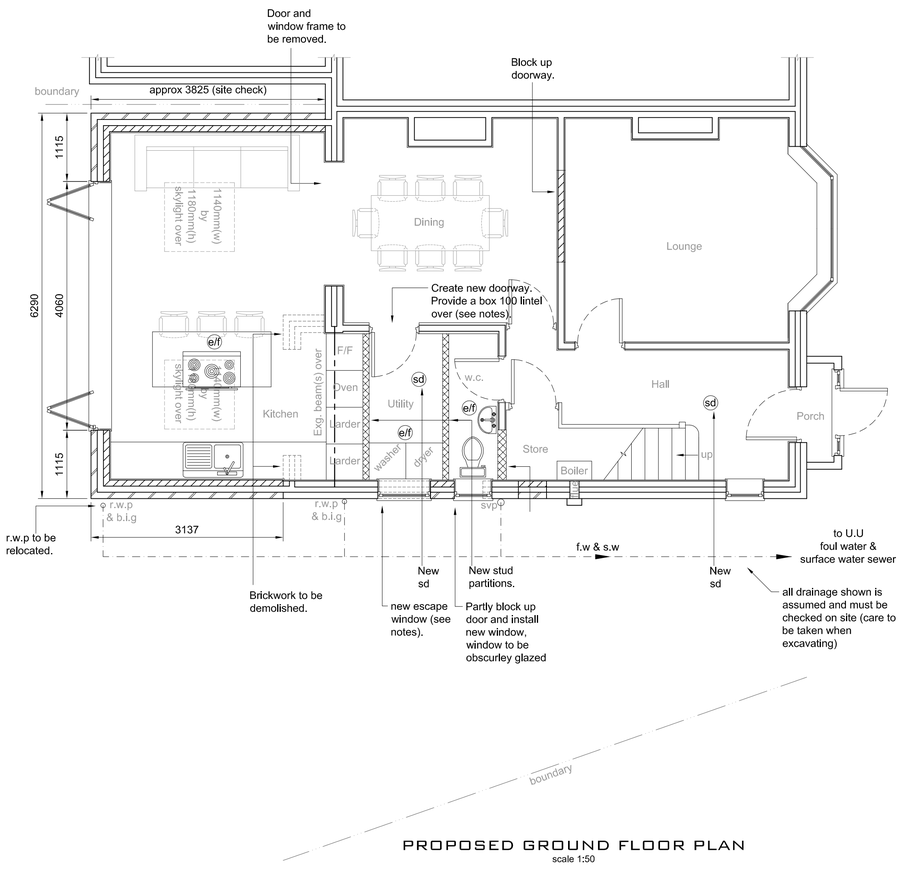

PROPOSED GROUND FLOOR PLAN
scale 1:50

KEY

Foul water & Surface water drains	f.w & s.w
Rain water pipe	r.w.p
Back inlet gully	b.i.g
Soil vent pipe	s.v.p
Soil stack	s.s
Manhole	MH
Inspection chamber	i.c
Mechanical extractor fans, capable of 15 ltrs/sec flow rate bathrooms; 30 ltrs/sec flow rate utility rooms; 6ltrs/sec flow rate w.c; with 15 mins overrun. Leave 10mm gap below door. Only install an e/f if appliance in the same room is a sealed unit	e/f
Self contained mains operated interlinked smoke alarms fixed to each floor level in main circulation areas.	sd
Structural Engineer	S.E
Timber stud wall, provide sound deadening quilt to bedrooms finished with 15mm plasterboard & skim	
Blockwork built on suitable foundations	
Facing brickwork	
rodding eye	r.e

m 0 1 2 3 4 5 m 1:50
m 0 1 2 3 4 5 6 7 8 9 10 m 1:100
mm 0 10 20 30 40 50 60 70 80 90 100 mm 1:1

DWG No.	M23 1PF/20/01
TITLE	PLANS, ELEVATIONS & SECTIONS
PROJECT	Proposed Development to 20 Biddall Drive Manchester M23 1PF
CLIENT	Mrs. D. Lawton
DATE	01/08/2019
SCALE AT A1	AS SHOWN

PRO-TECH ARCHITECTURE
WWW.PRO-TECHARCHITECTURE.CO.UK
CONTACT : LEE ROWLEY B.ENG.(HONS)
0151-420-7895
07967836028
20 ELSTREE COURT
WIDNES. WA8 3EP
INFO@PRO-TECHARCHITECTURE.CO.UK
FOLLOW US ON FACEBOOK @PROTECHARCHITECTURELTD