Arboricultural
Impact Assessment

with

Arboricultural Method Statement
of
Tree Protection Measures

121 Palatine Road
Didsbury
Manchester

GODWINS ARBORICULTURAL LIMITED
www.godwins.co.uk

SUMMARY

Twelve individual trees, four groups of trees and three hedges were recorded. In accordance with *BS5837:2012 Trees in relation to design, demolition and construction* one individual tree was recorded as retention category 'A'; four individual trees and one group of trees were recorded as retention category 'B'; and a mixture of six individual trees, three groups of trees and three hedges were recorded as retention category 'C'.

The trees were generally found to be in a good to fair condition, however, one individual tree (**T7**) was classified as retention category 'U' (unsuitable for retention).

It is understood that the site does not contain any Tree Preservation Orders, but it is located within the Blackburn Park Conservation Area.

The proposed development directly impacts upon several trees. These trees shall require removal due to their close proximity to construction activity. All of the trees proposed for removal are considered to be low quality ('C' category) specimens, several of which are self-seeded.

It is recommended that the proposed tree removal be mitigated as part of a post development planting scheme of well-structured new trees that will add to the quality of the area and help integrate the proposed development into the surrounding landscape.

The retained trees will be protected to British Standard *BS5837:2012 Trees in relation to design, demolition and construction* to ensure that they remain in a healthy condition during and post development. The *Tree Protection Plan* to the rear of this report highlights the recommended tree protection measures.

Any arboricultural work undertaken should be done so by a competent arborist in line with British Standard *BS3998:2010 Tree Work*, and after permission has been granted to do so by the local planning authority.

CONTENTS

1. Introduction 1

1.1. Project outline 1

1.2. Scope of this report 1

1.3. Data collection 1

2. Arboricultural Constraints 2

2.1. Tree retention categories 2

2.2. Tree age class and condition 2

2.3. Root Protection Areas 3

2.4. Tree protection status 3

3. Arboricultural Impact Assessment 4

3.1. The proposed development 4

3.2. Proposed tree removal and mitigation measures 4

3.3. Proposed tree pruning works 4

3.4. Site construction traffic 4

3.5. RPA beyond the protective barriers 5

3.6. Excavations within the RPA 5

3.7. Post development impacts 5

4. Method Statement of Tree Protection Measures 6

4.1. Tree works prior to development 6

4.2. Tree protection barriers 6

4.3. Services within the RPA 6

4.4. Excavations within the RPA 7

Drawing 1. Tree Constraints Plan 9

Drawing 2. Tree Protection Plan 10

Appendix 1. Tree Schedule 11

Appendix 2. Explanatory Notes 12

Appendix 3. Report Limitations & General Guidelines 15

Appendix 4. Protective Barrier Construction 17

1. Introduction

1.1. Project outline

1.1.1. This report has been produced in accordance with *British Standard BS5837: 2012 Trees in relation to design, demolition and construction* to achieve a harmonious and sustainable relationship where tree retention or planting is proposed in conjunction with nearby construction (site-based operations with the potential to affect existing trees).

1.2. Scope of this report

1.2.1. This report has been produced to comply with planning requirements where trees are to be considered as part of a proposed development. To achieve this, arboricultural constraints have been identified and a detailed plan (*Tree Constraints Plan*) has been produced showing the location, root protection areas and retention category of trees within the site.

1.2.2. In addition, this report provides an *Arboricultural Impact Assessment* that evaluates the direct and indirect effects of the proposed development, and where necessary makes recommendations for mitigation measures. This report also includes an *Arboricultural Method Statement of Tree Protection Measures* and a *Tree Protection Plan*, which demonstrate how the retained trees will be protected during construction, and where tree protection measures are to be implemented.

1.2.3. Recommendations for tree works within this report are specific to the construction of the proposed development. This report does not form part of a tree safety inspection or tree management strategy. To manage the safety and risk from trees it is advised that trees are inspected in detail for this purpose by an arboriculturist using a suitable risk management strategy.

1.3. Data collection

1.3.1. A ground level inspection was undertaken by Godwins Arboricultural Limited on 28th October 2019. As recommended by *BS5837*, the position of all trees within the site with a stem diameter of 75 mm or more, measured at 1.5 m above highest adjacent ground level are recorded. The position of trees with an estimated stem diameter of 75 mm or more that overhang the site or are located beyond the site boundaries within a distance of up to 12 times their estimated stem diameter were also recorded. For individual trees the crown spread taken at four cardinal points; for tree groups the overall extent of the canopy was recorded.

1.3.2. Tree positions were plotted using a topographical plan supplied by the client, which is the basis for which the *Tree Constraints Plan* has been prepared.

2. Arboricultural Constraints

2.1. Tree retention categories

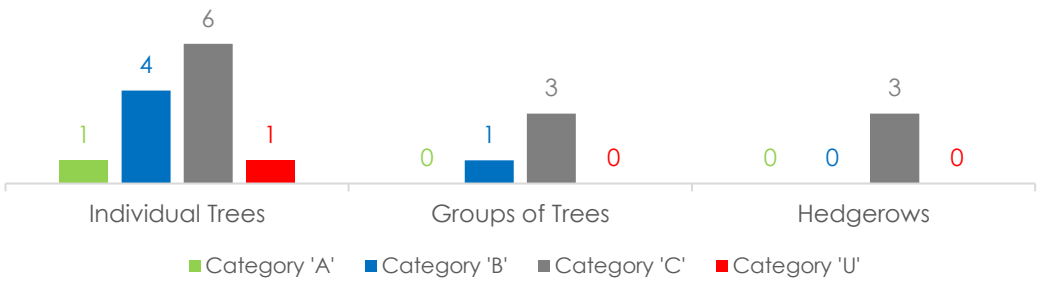

2.1.1. Twelve individual trees, four groups of trees and three hedges were recorded. In accordance with *BS5837:2012 Trees in relation to design, demolition and construction* one individual tree was recorded as retention category 'A'; four individual trees and one group of trees were recorded as retention category 'B'; and a mixture of six individual trees, three groups of trees and three hedges were recorded as retention category 'C'.

2.1.2. The trees were generally found to be in a good to fair condition, however, one individual tree (**T7**) was classified as retention category 'U' (unsuitable for retention).

2.2. Tree age class and condition

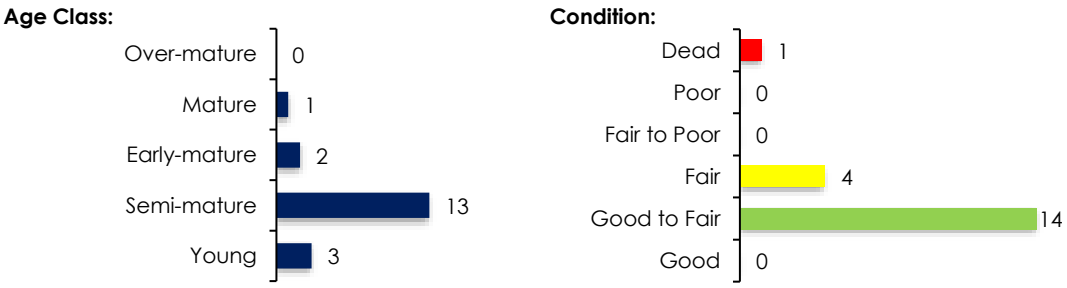

(Includes groups and hedgerows as a single entity.)

2.2.1. Please see *Appendix 1* for the detailed list on existing species, age class, dimensions and condition of trees within the site, and *Appendix 2* for an explanation of retention category criteria. Tree locations can be seen on the *Tree Constraints Plan* at the rear of this report (*Drawing 1*).

2.2.2. The inspection of several trees was restricted as detailed at *Appendix 1*. However, sufficient tree related data was collected to fulfil the requirements detailed within the scope of this report.

2.3. Root Protection Areas

2.3.1. The tree Root Protection Area (RPA) is a layout design tool indicating the area around a tree that, along with the tree stem and branches, must be considered during development. The protection of the roots and soil structure within the RPA should be treated as a priority. The RPA of each tree or group is marked on the *Tree Constraints Plan* at the rear of this report.

2.4. Tree protection status

2.4.1. A statutory tree protection enquiry was made with Manchester City Council on 31st October 2019. It is understood that the site does not contain any Tree Preservation Orders, but it is located within the Blackburn Park Conservation Area.

2.4.2. **It is essential that no works are undertaken to any trees within the site, including works to category 'U' trees, prior to consideration and consent of the proposed works under full planning approval by the local planning authority regardless of whether the trees are currently protected or not.**

3. Arboricultural Impact Assessment

3.1. The proposed development

3.1.1. Disabled car parking with an access ramp is proposed to the front of the site; and eight car parking spaces with bin store and landscaping is proposed to the rear of the site. The proposed layout drawing can be seen within the *Tree Protection Plan* to the rear of this report. This drawing has been used to assess the potential direct and indirect arboricultural impacts.

3.2. Proposed tree removal and mitigation measures

3.2.1. The proposed development directly impacts upon several trees. These trees shall require removal due to their close proximity to construction activity. Please see the table below for the proposed tree removal details.

	Category 'A'	Category 'B'	Category 'C'
Trees to be removed to enable the construction of the proposed development	None	None	None

3.2.2. All of the trees proposed for removal are considered to be low quality ('C' category) specimens, several of which are self-seeded.

3.2.3. It is recommended that the proposed tree removal be mitigated as part of a post development planting scheme of well-structured new trees that will add to the quality of the area and help integrate the proposed development into the surrounding landscape.

3.3. Proposed tree pruning works

3.3.1. No pruning works shall be required to enable the construction of the proposed development. The crown height of the trees would be enough to accommodate the proposed building without the need for pruning works.

3.3.2. Several trees may benefit from general arboricultural works as part of a practical post-development arboricultural management strategy; however, these works are not covered within the scope of this report.

3.4. Site construction traffic

3.4.1. To protect the trees from construction site traffic the remaining trees should be protected by a temporary protective barrier (see *Section 4.2*), put in place prior to any construction activity. The barrier will ensure that the trees remain in a healthy condition during and after development.

3.4.2. Several of the retained trees are located beyond topographical site features, existing boundary fencing/walls and away from the proposed development area. As such, these trees shall not require protection via temporary protective barriers as they are already provided protection due to their inaccessible location that is remote from the proposed construction activity.

3.5. RPA beyond the protective barriers

3.5.1. Sections of RPA from trees **T6**, **T8**, **T12** and **T16** extend beyond the protective barrier and existing boundary wall and into the proposed working area. However, it should be noted that these RPAs are currently located beneath an existing tarmac hard surface that would act to protect the RPAs from construction activity. In addition, the RPA of tree **T2** is located within a ground level change and the adjacent retaining wall is likely to restrict the growth of roots within the proposed development area. As such the proposed works would not put the trees under any increase pressure during construction, as the existing surface would prevent soil compaction and contamination during the demolition and construction phase.

3.6. Excavations within the RPA

3.6.1. Consideration has been given to the positioning of the proposed access ramp at the front of the site in relation to the roots of the adjacent tree (**T2**). On this basis the ramp has been positioned so that minimal RPA would potentially be disturbed during construction.

3.6.2. There is also the potential for disturbance to the RPA of trees T8, **T12** and **T16**. The RPA of **T8** theoretically lies beneath the proposed access ramp to the rear of the site, however, this RPA is currently located beneath an existing tarmac hard surface that is likely to restrict the spread of roots into this area. The proposed bins store to the rear of the site will require minor excavations within the RPA of trees **T12** and **T16**. As a precautionary measure, it is recommended that excavations within the RPA of trees **T2**, **T8**, **T12** and **T16** are undertaken using techniques sympathetic to tree roots.

3.7. Post development impacts

3.7.1. No soil samples were taken during the site visit. It is recommended that soil assessment is undertaken by a competent person to determine whether the soil is shrinkable, and that foundation design is undertaken in line with detailed guidance given in the National House Building Council (NHBC) publication *Building near trees, Chapter 4.2*.

3.7.2. It is essential that consideration is also given by a suitably qualified professional to how the proposed tree removal may affect soil conditions and the stability of any future foundations.

4. Method Statement of Tree Protection Measures

4.1. Tree works prior to development

4.1.1. Care should be taken to ensure during tree removal or remedial work that damage to the retained trees and disturbance to the RPA is avoided. All tree works, as described in *Appendix 1*, should be carried out in accordance with *BS 3998: 2010 Recommendations for tree work*, and after permission has been granted to do so by the local planning authority. It is essential that those appointed to undertake any tree works carry out adequate checks to ensure that no statutory laws are contravened during tree work operations.

4.2. Tree protection barriers

4.2.1. Once the tree works have been completed, all trees that may be affected by construction activity and are being retained on site should be protected by barriers before any materials or machinery are brought onto the site, and before any demolition, development or stripping of soil commences. No hardcore, rubble or soil from groundworks should be located within the protective barriers. It should be confirmed by an arboriculturist or the local authority that the barriers have been correctly set out on site, prior to the commencement of any other operations.

4.2.2. The protected area should be regarded as off limits, and once installed barriers should not be removed or altered without prior recommendation by an arboriculturist and, where necessary, approval from the local planning authority.

4.2.3. Please see *Appendix 4* for suggested barrier construction detail. It is recommended that in this instance the protective barrier shown in *Figure 1* would be appropriate. The suggested location for protective fencing is shown on the *Tree Protection Plan* (*Drawing 2*).

4.2.4. Only when the development phase is complete and the site machinery has been removed, the local planning authority should be invited to inspect the site to give approval for the removal of the tree protection measures.

4.3. Services within the RPA

4.3.1. Wherever possible, under-ground services should be routed outside of the RPA of retained trees, and plans showing the proposed routeing should be drawn up. Where excavations may be required hand-held tools might be acceptable for shallow service runs.

4.4. Excavations within the RPA

4.4.1. Excavations within the RPA of **T2**, **T8**, **T12** and **T16** *must* be undertaken by hand, down to a depth of 600mm, to establish the presence of roots. Any tree roots exposed within the RPA must be left as intact as careful digging with hand tools will allow, avoiding the use of heavy machinery within the RPA.

4.4.2. During excavations roots smaller than 25mm diameter may be pruned back, making a clean cut with a suitable sharp tool (e.g. bypass secateurs or handsaw), except where they occur in clumps. Roots occurring in clumps or of 25mm diameter and over should be severed only following consultation with an arboriculturist; as such roots might be essential to the tree's health and stability.

4.4.3. Any roots exposed during excavations should immediately be wrapped or covered in damp hessian to prevent desiccation and to protect them from rapid temperature changes. Any wrapping should be removed prior to backfilling, which should take place as soon as possible. Prior to backfilling, retained roots should be surrounded with topsoil or un-compacted sharp sand (builders' sand should not be used because of its high salt content, which is toxic to tree roots), or other loose inert granular fill, before soil or other suitable material is replaced.

Client: CLIC Sargent
Project No: AIA.13081
Issue: 01

Date Issued: 5th November 2019
Status: FINAL

Signed for on behalf of Godwins Arboricultural Limited:

R Godwin

Robert Godwin MSc MArborA.
Arboriculturist

Contact Details:

Godwins Arboricultural Limited
Digital World Centre
1 Lowry Plaza, The Quays
Salford
Manchester
M50 3UB

www.godwins.co.uk
info@godwins.co.uk
0800 030 4045

Drawing 1. Tree Constraints Plan

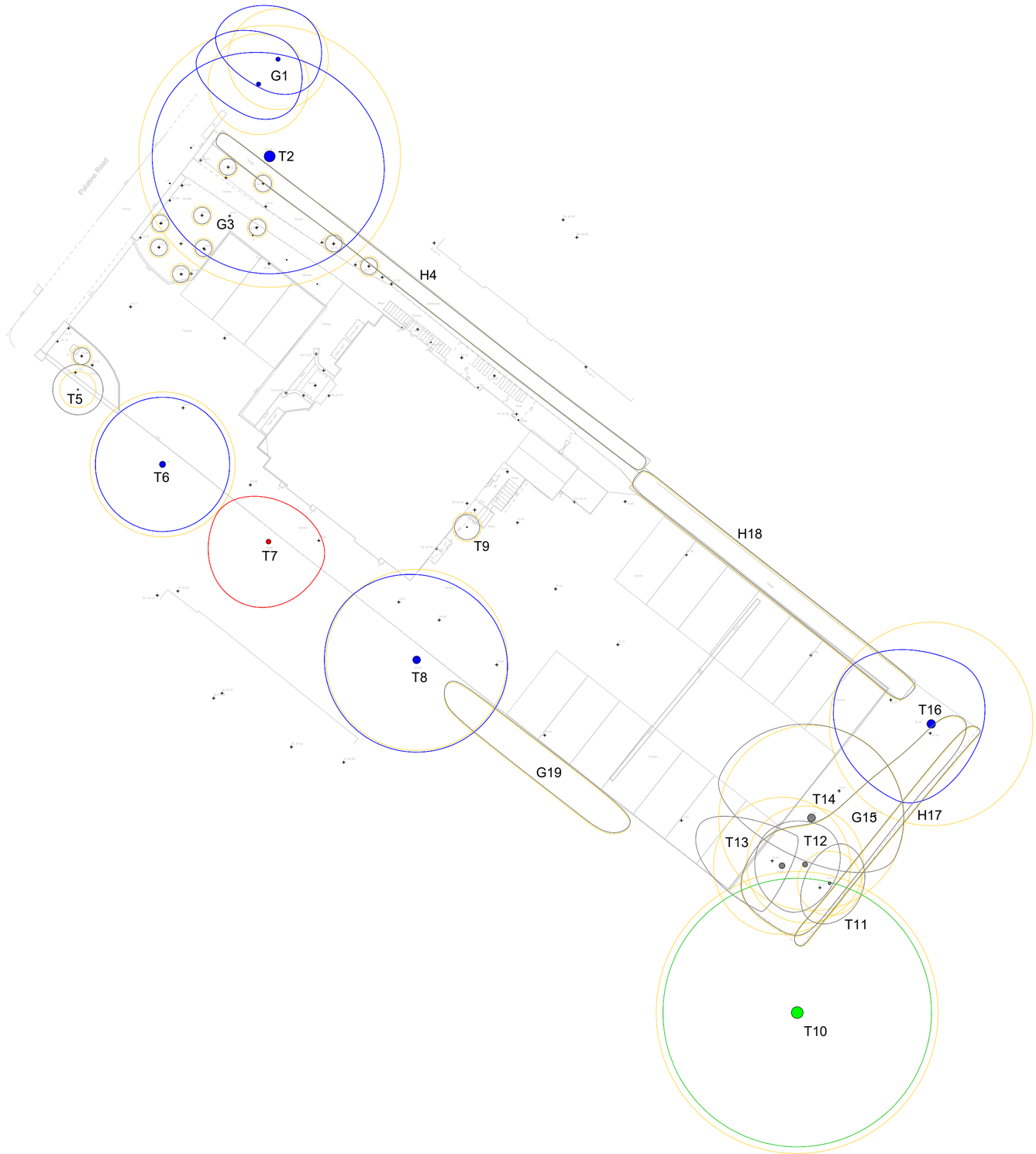

T	G	H	W	S
INDIVIDUAL TREE	GROUP OF TREES	HEDGEROW	WOODLAND GROUP	SHRUB

EXISTING LAYOUT

TREE QUALITY ASSESSMENT CATEGORY

	CATEGORY 'A' **HIGH QUALITY**
	CATEGORY 'B' **MODERATE QUALITY**
	CATEGORY 'C' **LOW QUALITY**
	CATEGORY 'U' **UNSUITABLE FOR RETENTION**

Based on British Standard 5837:2012 Table 1.
Please refer to Appendix 2 of the arboricultural report for more detailed category definitions.

ROOT PROTECTION AREA (RPA)

The Root Protection Area (RPA) is a layout design tool highlighting the underground tree constraints. Along with the tree stem and branches the RPA must be considered prior to and during development.

Written consent must be obtained from Godwins Arboricultural Limited before copying or using the data within this drawing other than for the purpose it was originally supplied.
Do not scale from this drawing.

GODWINS ARBORICULTURAL LIMITED
www.godwins.co.uk Tel: 0800 030 4045 info@godwins.co.uk
Digital World Centre, 1 Lowry Plaza, The Quays, Salford, M50 3UB.

PROJECT TITLE: 121 Palatine Road, Didsbury		
DRAWING TITLE: TREE CONSTRAINTS PLAN	**SCALE:** 1:200 @ A2	**ISSUE DATE:** 31/10/19
DRAWING NUMBER: TCP.13081	**REVISION:** .01	**DRAWN BY:** RG

Drawing 2. Tree Protection Plan

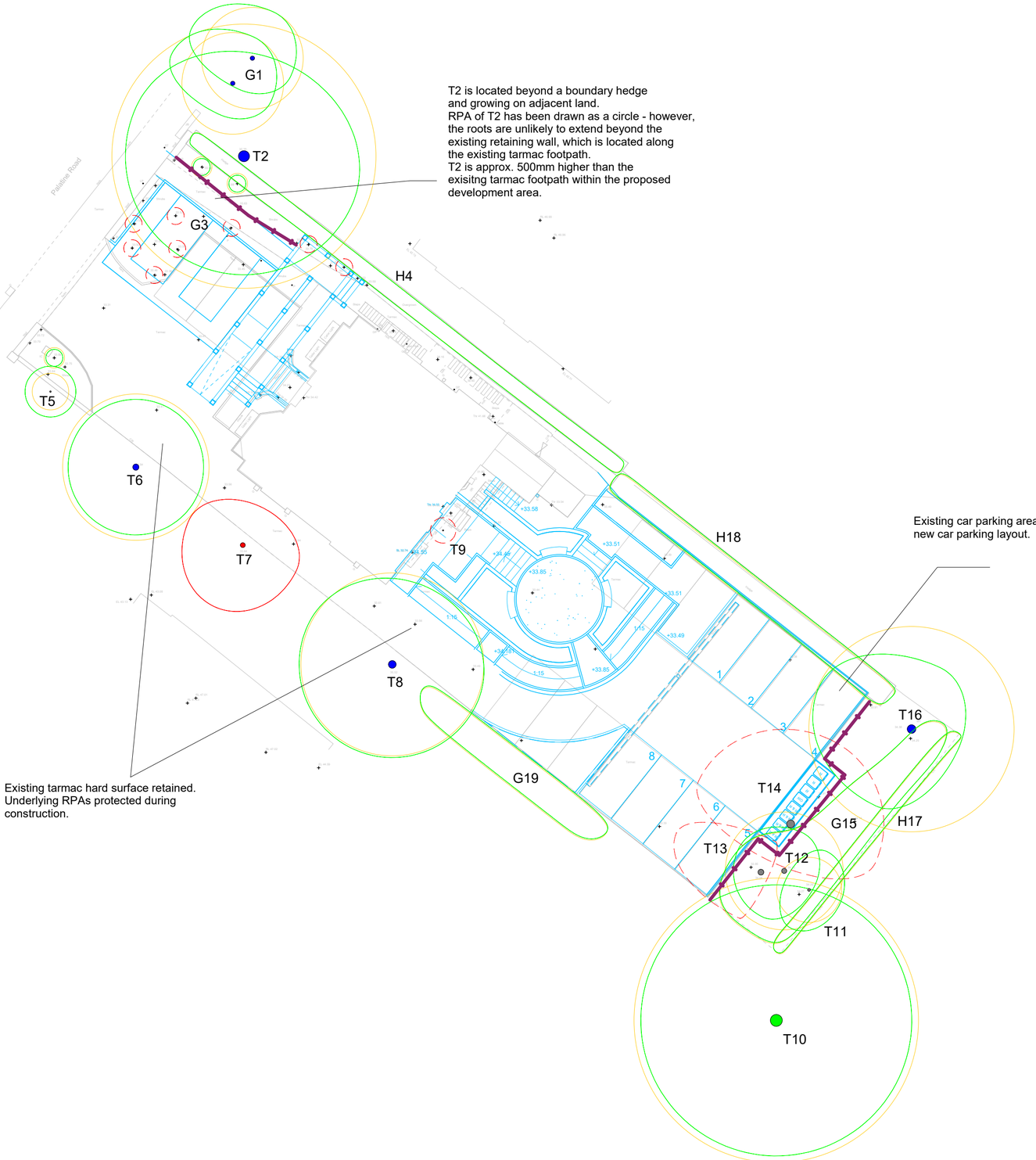

T	G	H	W	S
INDIVIDUAL TREE	GROUP OF TREES	HEDGEROW	WOODLAND GROUP	SHRUB

EXISTING LAYOUT

PROPOSED LAYOUT

PROPOSED TREE WORKS

TREE PROPOSED FOR RETENTION

TREE PROPOSED FOR PRUNING

FOR ARBORICULTURAL REASONS:
None
TO ENABLE DEVELOPMENT:
None

TREE PROPOSED FOR REMOVAL (ARBORICULTURAL REASONS)

T7

TREE PROPOSED FOR REMOVAL (TO ENABLE DEVELOPMENT)

G3 (8x trees), T9, T13, T14 & G15 (section)

Please refer to Appendix 1 of the Arboricultural Impact Assessment for details on tree condition and proposed works.

ROOT PROTECTION AREA (RPA)

The Root Protection Area (RPA) is a layout design tool highlighting the underground tree constraints. Along with the tree stem and branches the RPA must be considered prior to and during development.

TREE PROTECTION MEASURES

TEMPORARY PROTECTIVE BARRIER
Refer to Appendix 4 of the Arboricultural Impact Assessment for specification details.

Written consent must be obtained from Godwins Arboricultural Limited before copying or using the data within this drawing other than for the purpose it was originally supplied.
Do not scale from this drawing.

GODWINS ARBORICULTURAL LIMITED
www.godwins.co.uk Tel: 0800 030 4045 info@godwins.co.uk
Digital World Centre, 1 Lowry Plaza, The Quays, Salford, M50 3UB.

PROJECT TITLE: 121 Palatine Road, Didsbury		
DRAWING TITLE: TREE PROTECTION PLAN	**SCALE:** 1:200 @ A2	**ISSUE DATE:** 05/11/19
DRAWING NUMBER: TPP.13081	**REVISION:** .01	**DRAWN BY:** RG

Appendix 1. Tree Schedule

Tree No.	Species	Age	Stems at 1.5m	Stem Dia (mm)	Height (Crown Hgt) (m)	FSB (D) (m)	Branch Spread (m) N	E	S	W	Observations	Cond	Life Exp	Tree Work Recommendations	Root Protection Area (RPA) Radius (m)	Area (m^2)	Retention Category
G 1	Tilia X europaea (Common Lime)	Semi-mature	1	250	11(4)	5(S)	3	2.5	2	4	Occasional pruning wounds. Limited inspection - situated on adjacent land. Asymmetrical crowns. Tree RPA located within ground level change.	Good to Fair	40+	No action required.	3.0	28.3	B
T 2	Acer pseudoplatanus (Sycamore)	Early-mature	1	650	17(6)	6(S)	6	7	7	7	Balanced crown. Multiple pruning wounds. Limited inspection - situated on adjacent land. Tree RPA located within ground level change & hard surface area.	Good to Fair	40+	No action required.	7.8	191.2	B
G 3	Taxus baccata (Yew), Cupressus sp. (Cypress), Ilex aquifolium (Holly)	Young	1	50	2.5(0)	0(N)	0.5	0.5	0.5	0.5	Maintained.	Good to Fair	40+	Remove 8x trees to enable the construction of the proposed development.	0.6	1.1	C
H 4	Ligustrum ovalifolium (Privet)	Semi-mature	3	25	1.5(0)	0(N)	0.5	0.5	0.5	0.5	Linear boundary hedge. Maintained.	Good to Fair	40+	No action required.	0.5	0.9	C
T 5	Fagus sylvatica (Beech)	Young	1	90	5(2.5)	2.5(N)	1.5	1.5	1.5	1.5	Self-seeded specimen. Limited inspection - situated on adjacent land. Tree RPA located within ground level change. Tree RPA located within hard surface area.	Good to Fair	40+	No action required.	1.1	3.7	C
T 6	Taxus baccata (Yew)	Semi-mature	1	360	9.5(3.5)	3.5(N)	4	4	4	4	Asymmetrical crown. Occasional pruning wounds. Limited inspection - situated on adjacent land. Tree RPA located within hard surface area.	Good to Fair	40+	No action required.	4.3	58.6	B
T 7	Ulmus sp. (Elm)	Semi-mature	2	200	10(4.5)	4.5(N)	2.5	3.5	4	3.5	Asymmetrical crown. Twin-stemmed from ground level. Dead. Limited inspection - situated on adjacent land.	Dead	<10	Remove for arboricultural reasons.	3.4	36.3	U
T 8	Aesculus hippocastanum (Horse Chestnut)	Early-mature	1	450	12.5(5.5)	5.5(N)	5.5	5.5	5.5	5.5	Balanced crown. Multiple pruning wounds. Limited inspection - situated on adjacent land. Tree RPA located within hard surface area.	Good to Fair	40+	No action required.	5.4	91.6	B
T 9	Ilex aquifolium (Holly)	Young	2	50	1.2(0.5)	0.5(E)	0.75	0.75	0.75	0.75	Maintained.	Good to Fair	40+	Remove to enable the construction of the proposed development.	0.9	2.3	C
T 10	Fagus sylvatica (Beech)	Mature	1	700	18(9)	9(W)	8	8	8	8	Balanced crown. Occasional pruning wounds. Limited inspection - dense undergrowth. Limited inspection - situated on adjacent land.	Good to Fair	40+	No action required.	8.4	221.7	A

Tree No.	Species	Age	Stems at 1.5m	Stem Dia (mm)	Height (Crown Hgt) (m)	FSB (D) (m)	Branch Spread (m) N	E	S	W	Observations	Cond	Life Exp	Tree Work Recommendations	Root Protection Area (RPA) Radius (m)	Area (m^2)	Retention Category
T 11	Acer pseudoplatanus (Sycamore)	Semi-mature	1	160	7(3.5)	3.5(W)	2.5	2	2.5	1.5	Limited inspection - dense undergrowth. Crown suppressed by adjacent trees.	Fair	40+	No action required.	1.9	11.6	C
T 12	Acer pseudoplatanus (Sycamore)	Semi-mature	1	290	14(7)	7(W)	2.5	2	3	3	Unbalanced crown. Multiple pruning wounds. Self-seeded specimen. Tree RPA located within hard surface area.	Fair	40+	No action required.	3.5	38.1	C
T 13	Acer pseudoplatanus (Sycamore)	Semi-mature	1	340	14(5)	2.5(W)	2	0.5	3	5.5	Unbalanced crown. Multiple pruning wounds. Self-seeded specimen. Tree RPA located within hard surface area.	Fair	40+	Remove to enable the construction of the proposed development.	4.1	52.3	C
T 14	Acer pseudoplatanus (Sycamore)	Semi-mature	1	460	14(5)	4(W)	5.5	5.5	2.5	6	Unbalanced crown. Multiple pruning wounds. Self-seeded specimen. Stem - bark wound. Tree RPA located within hard surface area.	Fair	40+	Remove to enable the construction of the proposed development.	5.5	95.7	C
G 15	Ligustrum ovalifolium (Privet), Aucuba sp.	Semi-mature	3	35	2.5(0)	0(W)	0.5	0.5	0.5	0.5	Multi-stemmed from ground level. Limited inspection - dense undergrowth. Individuals crowns restricted by group.	Good to Fair	20+	Remove section to enable the construction of the proposed development.	0.7	1.7	C
T 16	Taxus baccata (Yew)	Semi-mature	6	150 300 200 200 200 150	9(2.5)	2.5(W)	4	2.5	5	6	Multiple pruning wounds. Multi-stemmed from ground level. Limited inspection - dense undergrowth. Tree RPA located within ground level change & hard surface area.	Good to Fair	40+	No action required.	6.1	115.4	B
H 17	Ligustrum ovalifolium (Privet)	Semi-mature	3	25	2.5(0)	0(W)	0.5	0.5	0.5	0.5	Linear boundary hedge. Maintained.	Good to Fair	40+	No action required.	0.5	0.9	C
H 18	Cupressus sp. (Cypress)	Semi-mature	1	90	4(0)	0(S)	0.75	0.75	0.75	0.75	Linear boundary hedge. Maintained. Tree RPA located within ground level change. Tree RPA located within hard surface area.	Good to Fair	40+	No action required.	1.1	3.7	C
G 19	Buddleia, Hazel & Fosythia	Semi-mature	3	50	4(1)	1(N)	1	1	1	1	Maintained linear boundary hedge, situated on adjacent land. RPA located within hard surface area.	Good to Fair	40+	No action required.	1.0	3.4	C

Appendix 2. Explanatory Notes

A2.1. Tree statistics and measurements

Survey record	Description
Tree No.	Unique tree reference number. (T) = Individual tree, (G) = Group of trees or woodland that form cohesive arboricultural features, (H) = Hedgerows and substantial internal or boundary hedges.
Species	Species listed by scientific name, with (common name).
Age	Life stage – Young, Semi-mature, Early-mature, Mature, Over-mature and Veteran.
Stem Count	Number of stems recorded at 1.5m above ground level.
Stem Diameter	Stem diameter recorded in millimetres at 1.5 meters above ground. Where the tree is multiple stemmed, each stem has been recorded.
Height (Crown Height)	Height of the tree in metres – to the closest 0.5m. Average canopy height in brackets, e.g. 10(3).
First Significant Branch	Existing height above ground level of first significant branch and direction of growth, e.g. 3(N)
Branch Spread	Branch spread, taken as a minimum at the four cardinal points – North, East, South and West.
Observations	General observations, particularly of structural and/or physiological condition (e.g. the presence of any decay, physical defect or historic pruning).
Cond	Condition of the tree recorded as Good, Good to Fair, Fair, Fair to Poor, Poor or Dead.
Life Exp	Life Expectancy - classed as less than 10 years, 10 plus years, 20 plus years, or more than 40 years.
Tree Work Recommendations	Recommended tree works – specifically those made to enable the proposed development, or to reduce significant risk of harm. The term 'No action required' does not mean that general post development arboricultural management works are not required.
RPA Radius	Radius of the root protection area, when plotted as a circle centred on the base of the stem.
RPA Area	Total area of RPA in metres squared, e.g. 100m^2.
Retention Category	See below – A2.2.

A2.2. Tree retention categories

Retention category and definition	Criteria
U (marked in red on the Tree Constraints Plan) = trees for removal.	Trees in such a condition that they cannot realistically be retained as living trees in the context of the current land use for longer than 10 years.
A (marked green on the Tree Constraints Plan) = Trees of high quality	Trees of high quality with an estimated remaining life expectancy of at least 40 years.
B (marked in blue on the Tree Constraints Plan) = Trees of moderate quality	Trees of moderate quality with an estimated remaining life expectancy of at least 20 years.
C (marked in grey on the Tree Constraints Plan) = Trees of low quality	Trees of low quality with an estimated remaining life expectancy of at least 10 years, or young trees with a stem diameter below 150mm.

Appendix 3. Report Limitations & General Guidelines

A3.1 Where the inspection of trees was limited (*see Appendix 1*), the 'Tree statistics and measurements' (*Appendix 2.1*) are estimated, and observations, condition and life expectancy are based on an inspection from the available vantage point.

A3.2 It is recommended that qualified and experienced companies are sought when appointing tree work contractors and they should be approved under the Arboricultural Association Approved Contractors scheme. It is essential that all appointed tree work contractors have adequate Public Liability, Products Liability and Employers Liability Insurance. All tree works must conform to the current BS 3998 *"Recommendations for Tree Work"*.

A3.3 Godwin's Arboricultural Ltd will not accept liability for works undertaken by third party companies. All necessary checks must be made by the appointed tree work contractor prior to undertaking any works to ensure that no statutory tree protection measures or relevant laws are contravened.

A3.4 The validity, accuracy and findings of this report are directly related to the accuracy of the information made available prior to and during the inspection process. No checking of independent third party data will be undertaken. Godwin's Arboricultural Ltd will not be responsible for the recommendations within this report where essential data are not made available, or are inaccurate.

A3.5 The assessment and works recommendations relate to conditions found at the time of our inspection. Any significant alteration to the site post our site inspection but pre submission for planning that may affect the trees present, or have a bearing on the planning implications (including level changes, hydrological changes, storms, extreme climatic events or site works) will necessitate a re-assessment of the trees and the site.

A3.6 This report has been carried out in order to inform the planning process, and not to assess the potential hazards and risks posed by trees. Where clear and obvious hazards have been observed to accessible trees, these have been addressed in the works recommendations. Where inspections were limited by restrictions such as stem ivy, understory vegetation, limited access, epicormic growth or being located on adjacent land, any form of tree condition assessment was restricted. A full assessment of the levels of risk posed by trees can only be informed by considering site use together with assessing any hazards present within a tree.

A3.7 Trees are dynamic structures that continue to develop and decline; in addition, changes in site use are likely to occur during and as a result from the proposed development. On this basis, regular tree risk assessments are advised.

A3.8 Godwin's Arboricultural Ltd plans are to scale whenever possible but care should be taken when measuring from a plan without first checking the original data.

Appendix 4. Protective Barrier Construction

A4.1 The default specification for protective barriers should consist of a vertical and horizontal scaffold framework, well braced to resist impacts, as illustrated below. The vertical tubes should be spaced at a *maximum* interval of 3 m and driven securely into the ground. Onto this framework, welded mesh panels should be securely fixed. Care should be exercised when locating the vertical poles to avoid underground services and, in the case of the bracing poles, also to avoid contact with structural roots.

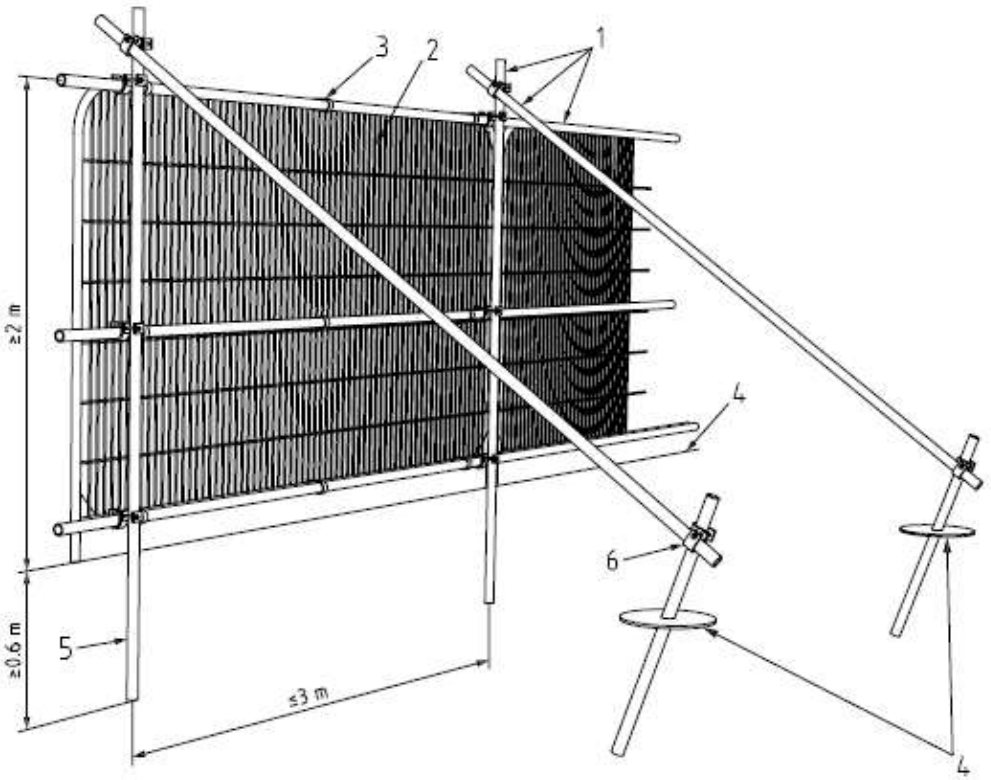

Key

1 Standard scaffold poles
2 Heavy gauge 2 m tall galvanized tube and welded mesh infill panels
3 Panels secured to uprights and cross-members with wire ties
4 Ground level
5 Uprights driven into the ground until secure (minimum depth 0.6 m)
6 Standard scaffold clamps

Figure 1. Default protective fencing barrier as detailed in *BS 5837: 2012*.

A4.2 Where the site circumstances and associated risk of damaging incursion into the RPA do not necessitate the default level of protection, an alternative specification may be adopted. This system includes 2 m tall welded mesh panels on rubber or concrete feet, secure enough to provide an adequate level of protection from cars, vans, pedestrians and manually operated plant. In such cases, the fence panels should be joined together using a minimum of two anti-tamper couplers, installed so that they can only be removed from inside the fence. The distance between the fence couplers should be at least 1 m and should be uniform throughout the fence. The panels should be supported on the inner side by stabilizer struts, which should normally be attached to a base plate secured with ground pins (Figure 2a). Where the fencing is to be erected on retained hard surfacing or it is otherwise unfeasible to use ground pins, e.g. due to the presence of underground services, the stabilizer struts should be mounted on a block tray (Figure 2b).

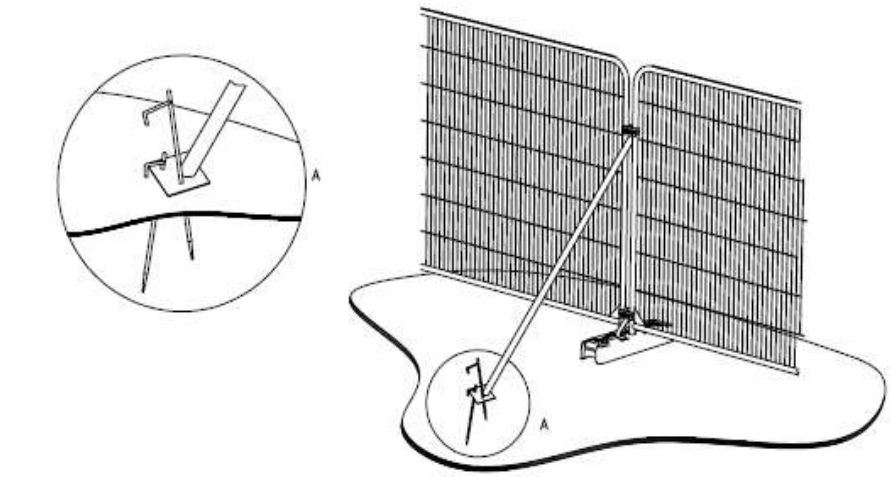

a) Stabilizer strut with base plate secured with ground pins

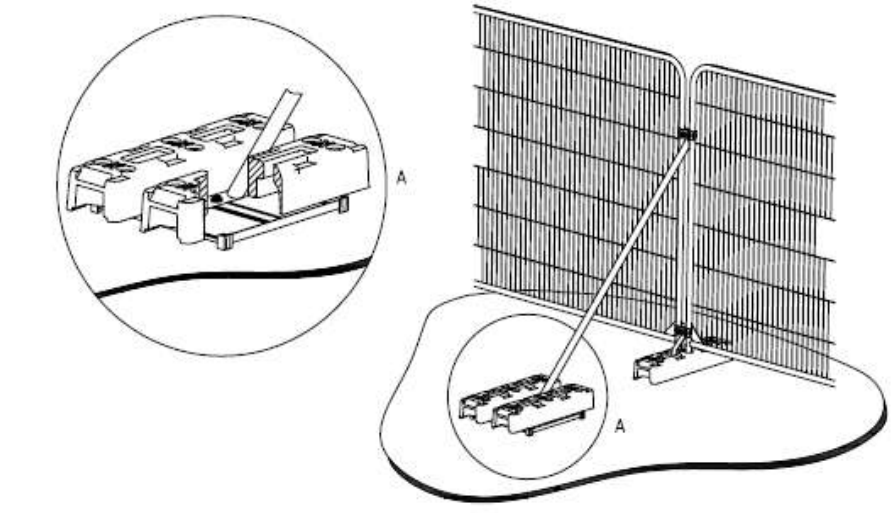

b) Stabilizer strut mounted on block tray

Figure 2. Examples of above-ground stabilizing systems

Godwins Arboricultural Limited © 2019
Tree Surveys and **Tree Reports**

info@godwins.co.uk | www.godwins.co.uk