Microlift

50 & 100kg Service Lifts

The widest, most versatile range of high quality goods and service lifts

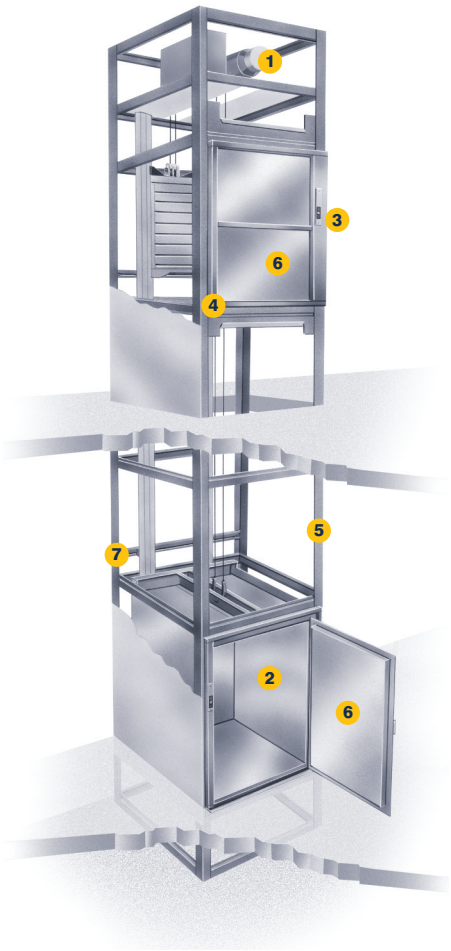

1. Quiet and efficient motor
2. Easy-clean finish
3. Robust push-buttons, fully automatic control
4. Interlocked entrances for extra safety
5. Galvanised framework for long life
6. 'Rise and fall' shutters, or hinged doors for ease of access
7. Structure supported frame

Options:

- Low Headroom – Provides significant reduction in the headroom required at the top floor via the option of either side- or bottom-mounted drive.
- Double Decker – model offers two cars in one lift

Our lifts make light work of moving loads of virtually every shape, weight or size. They protect you and your staff from the stresses and strains of manual handling. Installing a goods or service lift means you distribute goods quickly, efficiently and safely between any number of floors.

Wide range

Five 50kg and two 100kg stock models cater for every lifting requirement – from food, laundry and documents to beer crates and barrels, small trolleys and industrial equipment.

Quick, simple installation

The lift operates inside a rapidly-erected, structure supported frame which is easy to install and requires minimal builder's work. No separate motor room or load-bearing shaft is needed, which helps to keep costs down.

Available from stock*

All standard models are normally available from stock, which means that a lift can be installed and working within a few days, depending on the building work. Please contact us for further information.

Proven quality & reliability

Over 60,000 installations throughout the world are convincing proof of the product's engineering quality and reliability.

Choice of finishes

The finish of the lift car and rise and fall shutters can be tough grey baked enamel or stainless steel.

* Combi and bespoke models available on request

50C LH

50 & 100kg Double Decker

Technical specifications

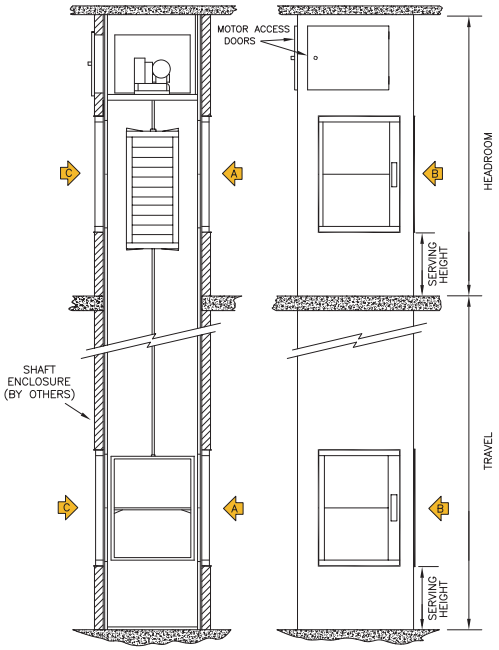

TYPICAL SECTION THROUGH 'C' AND 'A' ENTRANCES

TYPICAL FRONT ELEVATION FROM 'C' FACE

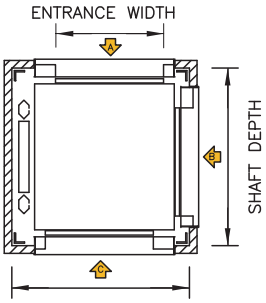

SECTION THROUGH ENTRANCES

Choice of entrance arrangements

Up to three way entry on most models. The sectional plans above show the many arrangements available with the Microlift.

TECHNICAL DATA – STANDARD RANGE:

Model	Capacity	Car Dimensions (w x d x h)	Entrance (w x h)	Serving Height (variable)	Shaft (w x h)	Pit Depth	Headroom
DD50	50kg	510 × 320 × 800	320 × 770	800	725 × 520	-	2600
50A$^{\Delta}$	50kg	545 × 420 × 800	420 × 770	800	820 × 640	-	2600
50B$^{\Delta}$	50kg	520 × 520 × 800	420 × 770	800	800 × 800	-	2600
50C$^{\Delta}$	50kg	620 × 620 × 800	520 × 770	800	900 × 900	-	2600
50C LH	50kg	620 × 620 × 800	520 × 770	800	900 × 900	-	2200
100A** *with rise and fall shutters*	100kg	720 × 720 × 1000	620 × 970	800	1000 × 1000	-	2800
100A** *with hinged doors*	100kg	720 × 720 × 1000	620 x 1000‡	FLOOR	1000 × 1000	350*	2000
100B** *with rise and fall shutters*	100kg	820 × 820 × 1200	720 × 1170	800	1100 × 1100	-	3000
100B** *with hinged doors*	100kg	820 × 820 × 1200	720 x 1200‡	FLOOR	1100 × 1100	350*	2200

TECHNICAL DATA – DOUBLE DECKER:

Model	Capacity	Car Dimensions (w x d x h)	Entrance (w x h)	Serving Height (variable)	Shaft (w x h)	Pit Depth	Headroom
50B DD	100kg	520 × 520 × 800 per car	420 × 770	(a) 1010 (b) Floor	800 × 800	350	3000
50C DD	100kg	620 × 620 × 800 per car	520 × 770	(a) 1010 (b) Floor	900 × 900	350	3000
100A DD	100kg	720 × 720 × 800 per car	620 × 770	(a) 1010 (b) Floor	1000 × 1000	350	3000
100B DD	100kg	820 × 820 × 800 per car	720 × 770	(a) 1010 (b) Floor	1100 × 1100	350	3000

TECHNICAL DATA – BOTTOM DRIVE:

Model	Capacity	Car Dimensions (w x d x h)	Entrance (w x h)	Serving Height (variable)	Shaft (w x h)	Pit Depth	Headroom
DD50 BD	50kg	510 × 320 × 800	320 × 770	800	725 × 520	-	2250
50A BD	50kg	545 × 420 × 800	420 × 770	800	820 × 640	-	2250†
50B BD	50kg	520 × 520 × 800	420 × 770	800	830 × 800	-	2250†
50C BD	50kg	620 × 620 × 800	520 × 770	800	930 × 900	-	2250†
100A BD	100kg	720 × 720 × 800	620 × 770	800	1030 × 1000	-	2250†
100B BD	100kg	820 × 820 × 800	720 × 770	800	1130 × 1100	-	2250†

Notes:

All dimensions are nominal and in mm.

Some of the dimensions can be varied to suit individual requirements by modification of stock models or by special manufacture – please contact us for details.

Entrances

Top Drive
50kg – entrances available on three sides (A, B & C) on all models with the following exceptions:
Entrance position 'B' is not available on the DD50 model, but can be provided on the 50A model with a reduced entrance width of 320mm;
Entrances are available on two sides (A, B or C) on all floors on the 50C LH model.

100kg – entrances are available on three sides (A, B & C) on all floors.

Double Decker
Entrances are available on two sides (A, B or C) on all floors.

Bottom Drive
Entrances are available on two sides (A, B or C) on all models with the exception of the DD50 BD which is available with the entrance position 'C' only.

(a) Top Car (b) Bottom Car

* For 100kg lifts with hinged door option, if floor level serving height is required then a pit will be necessary. A reduction in the pit depth is possible – please contact us for details.

$^{\Delta}$ Can be uprated to 100kg

** Can be uprated to 150kg

† If adjacent openings are required, increase headroom dimension by 200mm.

‡ These dimensions are without the recommended car entrance protection. With through or adjacent entrance configurations this must be fitted reducing car and clear entrance dimensions. Please contact us for details.

Key to model codes

LH – Low Headroom

DD – Double Decker

BD – Bottom Drive

Brief specification

Builder's work:

Preliminaries
The lift can be installed by our fitters in just a few days with the minimum disruption to premises. Preliminary builder's work is straightforward. All that is normally required prior to installation is an appropriately-sized opening in each floor, a flat level base capable of supporting downward deadloads and an electrical power supply.

We can provide your builder with exact builder's work details and drawings for your installation and, where necessary, liaise directly with the builder to ensure the whole operation runs smoothly.

After the installation
Your builder will need to provide an enclosure around the lift to protect against moving parts and conform with your local fire regulations. Permanent safe access to the motor must be provided to comply with current safety regulations. The lift installation and associated builder's work should comply with the latest Supply of Machinery (Safety) Regulations and be 'CE' marked accordingly.

Installation notes:

Headroom: The floor to ceiling height on the top floor served must be able to accommodate the winding unit. If there is insufficient headroom, we can make substantial reductions with our 'Low Headroom' or bottom drive option and suggest you contact us for details.

Serving height: This is normally set at 800mm but is fully adjustable before installation. To accept trolleys, the serving height can be at floor level – contact us for details.

Shaft: These dimensions give the minimum inside shaft width and depth that must be provided to enable your lift to be installed.

Load:	50kg and 100kg (can be uprated to 150kg).
Car:	Constructed in mild steel, finished in grey baked enamel with a stainless steel base and a removable stainless steel shelf. The car can also be finished in stainless steel.
Landing Entrances:	High quality rise and fall shutters or hinged doors are fitted with safety locks and can be finished in either grey baked enamel or stainless steel.
Car Entrance Protection:	Whilst it is not essential to fit doors onto the car itself, it is highly recommended to do so. If doors are not fitted, other means of restraining the goods should be assessed and provided. Stainless steel rise and fall doors are available for all models, whilst collapsible gates are available on all models serving at floor level as an option.
Mounting:	The lift is supplied in a structure-supported frame which is galvanised for longer life. We do not require a separate motor room or 'load-bearing' lift shaft. For more information, please ask for our builder's work detail.
Floors served:	Can serve up to 12 floors.
Speed:	0.35m/s (70ft/min).
Controls:	Fully automatic push button control, with call and despatch facilities at each entrance. For that extra reassurance, 'lift arrival', 'lift occupied' and 'lift position indicators' together with an 'arrival buzzer' are fitted as standard.
Operation:	The operation is smooth and quiet with a highly efficient motor winding unit with a reliable controller. Combined with a counter-balance drive system, this ensures electrical consumption is minimal.
Winding Unit:	Normally mounted at the top of the lift structure within the headroom dimensions shown overleaf. The motor drives a high quality reduction gearbox fitted with a traction vee-sheave. An electro-magnetic disc brake is supplied, with emergency release mechanism.
Electric Supply:	415 Volt-3 phase-50Hz or 240 Volt-1 phase-50Hz. A 15 amp isolator should be supplied for the lift by your electrician to be fixed adjacent to the lift at the top floor served for top drive units or lowest floor for bottom drive units.
Installation:	A 2-floor lift normally takes us 1-2 days to install depending on site conditions.
Delivery:	Normally available from stock.
Enclosure:	Normally by others.
Maintenance:	We recommend the lift is serviced and inspected every 3 months by competent lift engineers. This is to ensure efficient and reliable operation. We can arrange servicing after installation.
Guarantee:	The lift is guaranteed for twelve months from completion of installation, subject to it being serviced regularly by our engineers.
Policy:	We are continually developing and improving the Microlift range and reserve the right to alter specifications, dimensions and prices without prior notice.
Safety:	Once installed, tested, commissioned and all the building work is complete, the lift will comply with the Essential Safety Regulations (ESRs) of the latest Supply of Machinery (Safety) Requirements, otherwise known as the Machinery Directive and EN81-3 where applicable.

The Goods Lift Company Ltd
SP10 4NU
Telephone: 01264 356388
Email: info@goodsliftco.co.uk

glc goods lift company