

PLAN - BAR BANQUETTE

NOTE - banquette is to be constructed to butt-up to bar side elevation

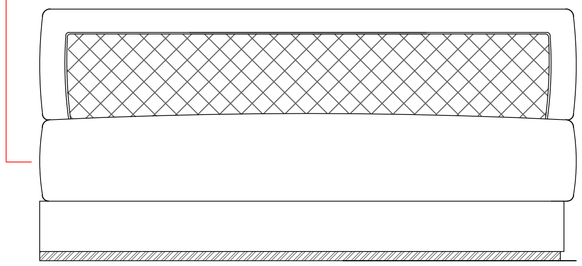

PLAN - BAR BANQUETTE

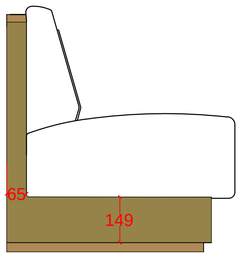

SIDE ELEVATION

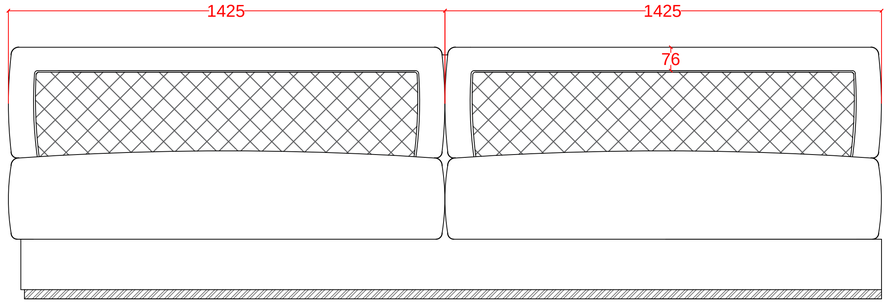

FRONT ELEVATION - RESTAURANT BANQUETTE

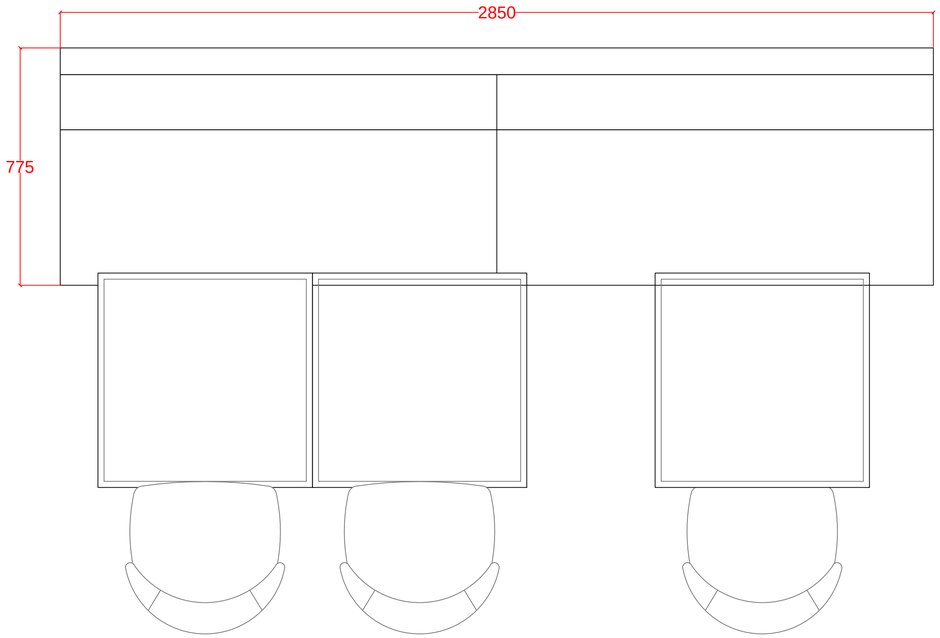

PLAN - RESTAURANT BANQUETTE

NOTE

All seating foam is to be contract grade, fire retardant foam, in accordance with British Standards.
Sub layer to be high density foams, topped with cushion medium density foam to form seat interface.
A layer of heavy duty denim is to be placed between the seating vinyl and foam to guard against puncture. This must be pulled and fixed tight.
ALL TIMBER POSTS AND SUBSTRATES MUST BE SEALED AGAINST MOISTURE INGRESS / WATER DAMAGE.

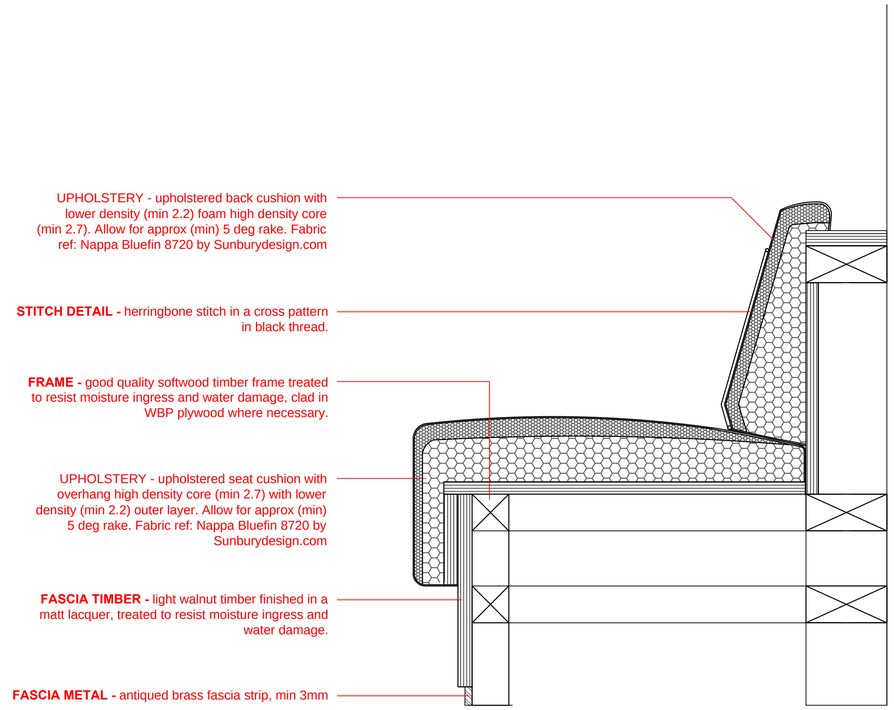

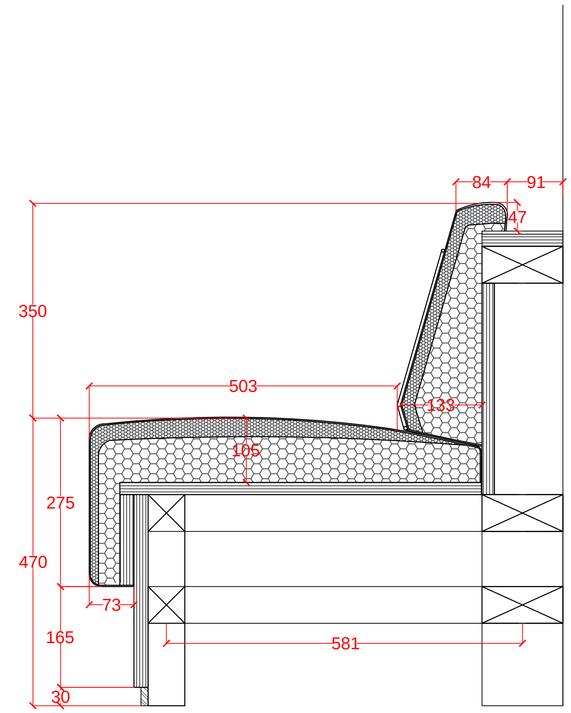

SECTIONS

S+0 associates
interiors / design / architecture
Suite 1, 1st Floor, Old Granary
Back of Beyer, Peel Street, Ancoats, Manchester, M4 6DB
T: 0161 832 8303 F: 0161 832 8304
E: admin@soassociates.co.uk W: www.soassociates.co.uk

Drawing number: MOSU_MAN_1504 Revision: A Status: DRAFT
Client: SAKE LESIRE LTD
Project title: MOSU MANCHESTER, UNIT 15 BARTON ARCADE, MANCHESTER, M3 2BB
Drawing title: BANQUETTE SEAT
Date: 02-09-2019 Drawn by: OL Checked by: - Scale: AS INDICATED AT A1

Rev.	By	Date	Amendment
A	OL	29-11-2019	Bar banquette added