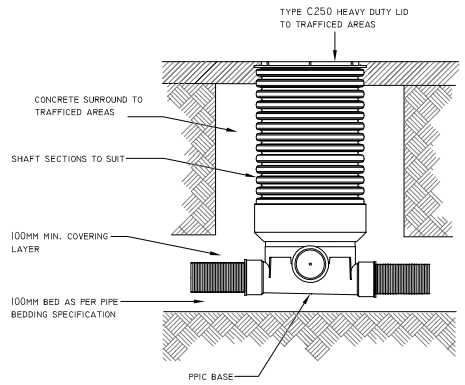

TYPICAL SHALLOW 450Ø PPIC DETAIL
OUTSIDE BUILDING PERIMETER (TRAFFICED AREAS)
N.T.S

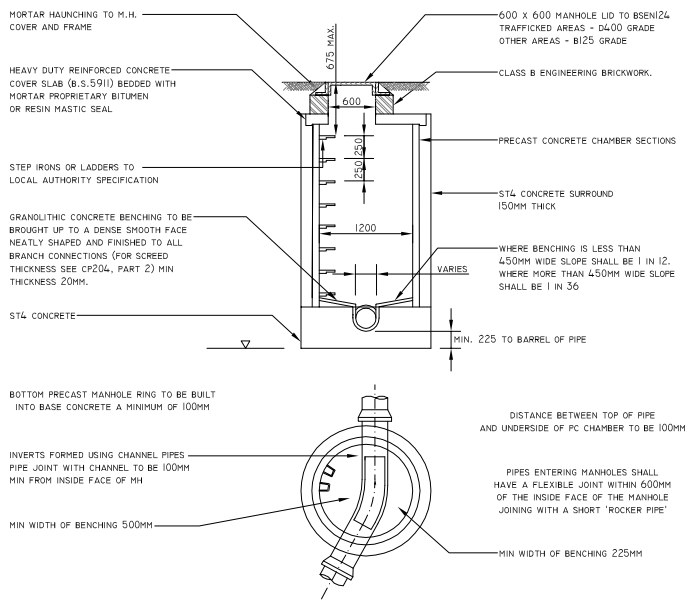

PRE-CAST CONCRETE MANHOLE DETAIL
N.T.S

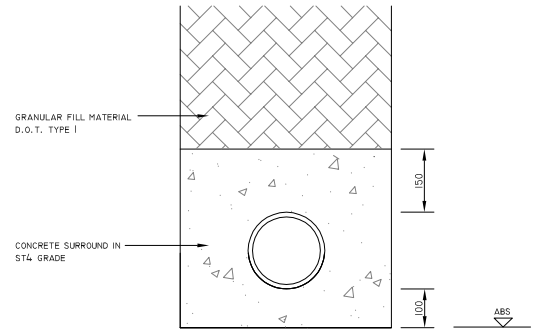

CLASS Z BEDDING
N.T.S

UNDER EXTERNAL AREAS WHERE PIPE CROWN IS LESS THAN 750MM BELOW SURFACE OF AREAS ACCESSIBLE TO TRAFFIC OR LESS THAN 400MM BELOW SURFACE IN ANY OTHER AREA. (N.B. FORM VERTICAL CONSTRUCTION JOINTS AT FACE OF ALL FLEXIBLE PIPE JOINTS IN 18MM COMPRESSIBLE BOARD)

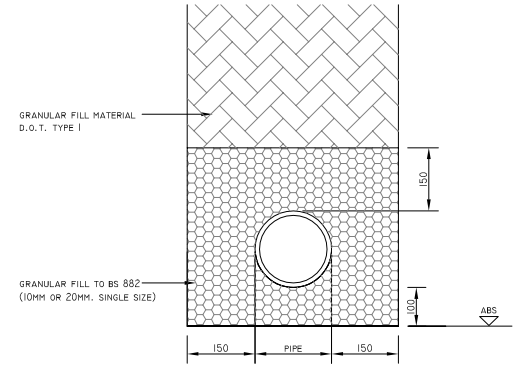

CLASS S BEDDING
N.T.S

NOTES:

1. THIS DRAWING IS COPYRIGHT AND THE PROPERTY OF BELL MUNRO CONSULTING LTD. THE DRAWING MUST NOT BE REPRODUCED IN PART OR IN WHOLE WITHOUT PRIOR WRITTEN AUTHORITY.

2. THIS DRAWING MUST NOT BE SCALED BY EITHER CONTRACTORS OR OTHER CONSULTANTS ANY DIMENSIONAL OR SETTING - OUT DISCREPENCIES ARE TO BE REPORTED TO BELL MUNRO CONSULTING PRIOR TO CONSTRUCTION / FABRICATION COMMENCING.

3. THIS DRAWING MUST BE READ IN CONJUNCTION WITH THE RELEVANT BMC SPECIFICATIONS TOGETHER WITH THE APPROPRIATE ARCHITECTS AND SERVICES CONSULTANTS DRAWINGS AND SPECIFICATIONS.

4. SEE DRAWING J6497 D01 FOR FURTHER NOTES

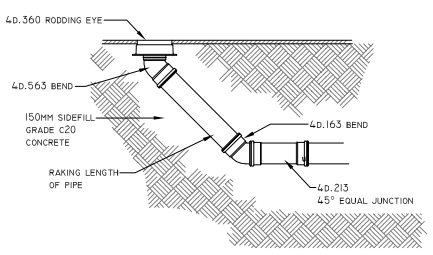

RODDING EYE DETAIL
N.T.S

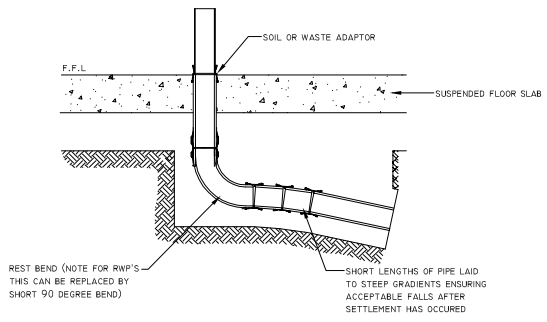

REST BEND CONNECTION CONNECTION DETAIL
N.T.S

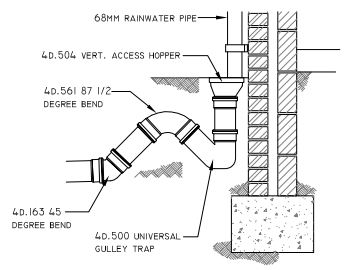

EXTERNAL R.W.P TO DRAIN
N.T.S

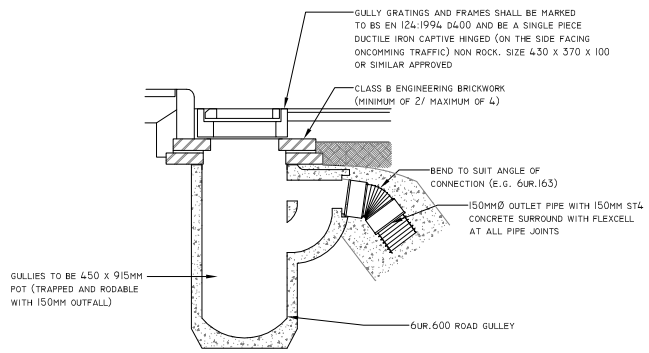

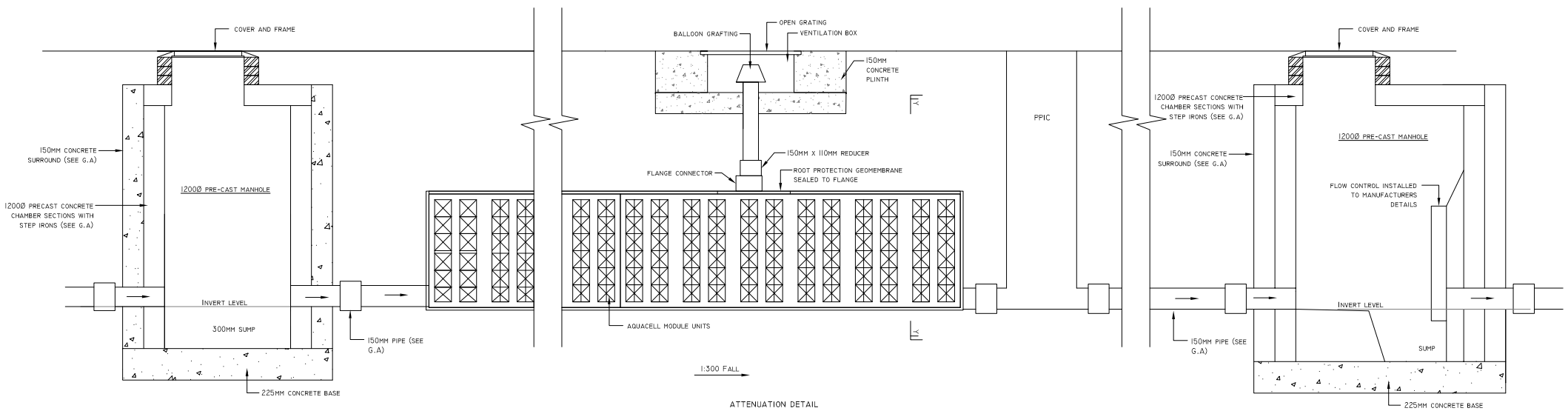

ATTENUATION DETAIL
N.T.S.

PLANNING

REV	COMMENTS	DATE	BY
--	INITIAL ISSUE	27.09.19	SMB

BMC

BELL MUNRO CONSULTING LTD

CONSULTING CIVIL & STRUCTURAL ENGINEERS
TURRING HOUSE
5 ARCHWAY
MANCHESTER
M15 5RL
TEL: 0161 2098032
FAX: 0161 2098033
EMAIL: CONSULTING@BELLMUNRO.CO.UK
WWW.BELLMUNRO.CO.UK

CLIENT: KINGSTONE CONSTRUCTION

PROJECT: PORTWAY, WYTHENSHAWE

TITLE: DRAINAGE DETAILS

DRAWN BY:	CHECKED BY:	SCALE:	DATE:
SMB	AM	AS SHOWN	09/19

DRAWING NUMBER: J6497/D02

REVISION: -