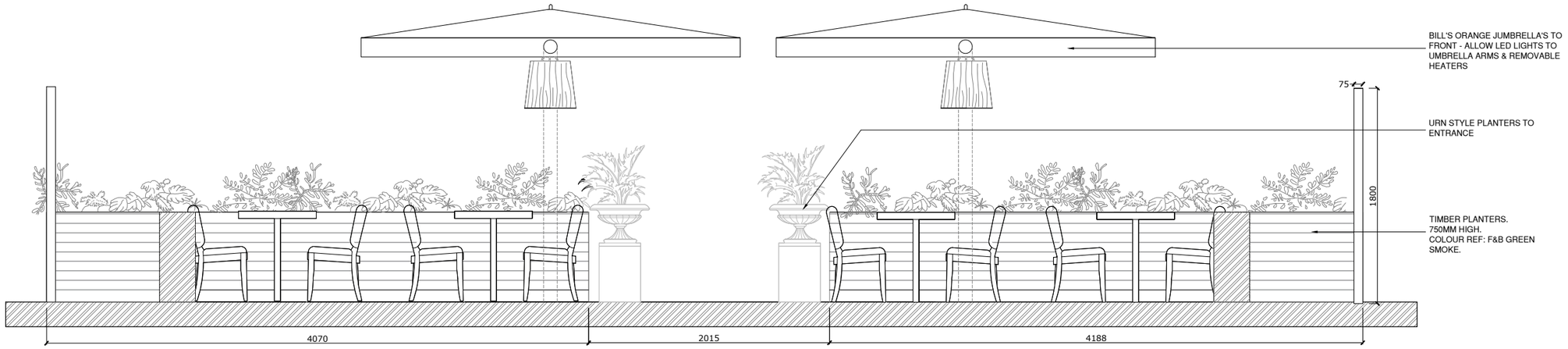

SECTION FF
SCALE 1:20 @ A1, 1:40 @ A3

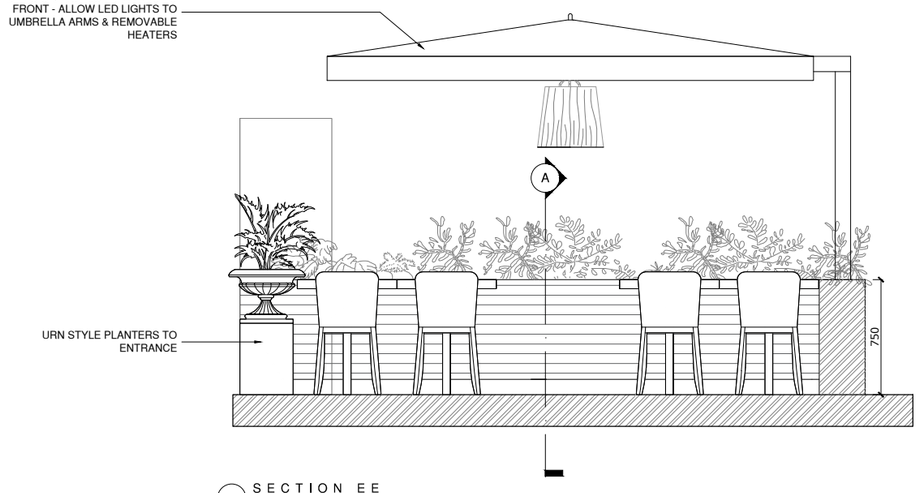

SECTION EE
SCALE 1:20 @ A1, 1:40 @ A3

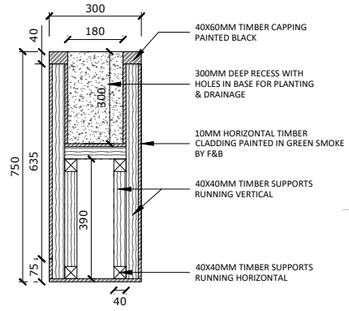

PLANTER SECTION A
SCALE 1:10 @ A1, 1:20 @ A3

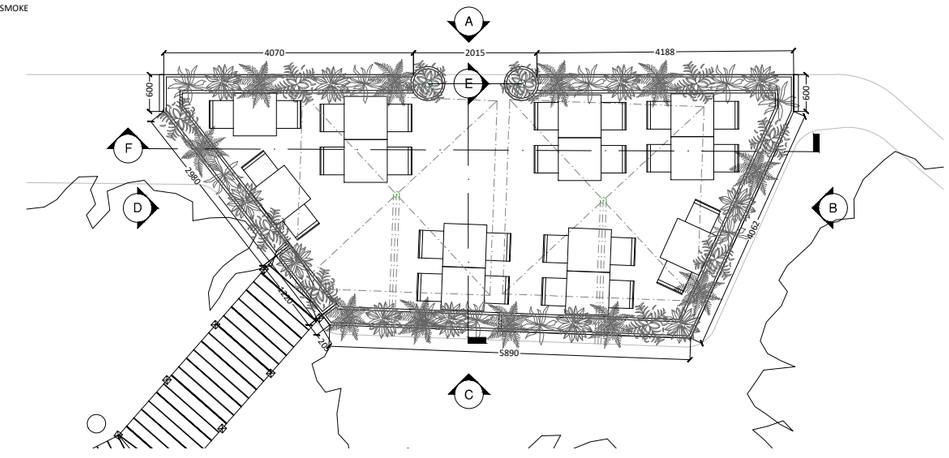

REFERENCE PLAN
SCALE 1:50 @ A1, 1:100 @ A3

0m 1m 2m 3m 4m 5m

Origin: ☐ CAD ☐ IMAGE ☐ SURVEY Status: ☐ For Information ☐ For Tender ☐ For Construction ☐ As Built Drawing	Copyright of this drawing is owned by Focus Design Ltd - Do not reproduce, distribute without written consent. All dimensions to be checked on site and any discrepancies notified prior to commencement of work.	FOCUS DESIGN Ltd The Old Pumping Station, Main Road, Littleton, Winchester, Hampshire, SO22 6PR 01962 850000	DATES REV COMMENTS	SCALE : 1:20 @ A1 DATE : MARCH '19 DRAWN BY : AG	DRAWING TITLE : EXTERNAL SEATING SECTIONS	CLIENT : BILLS	PROJECT : HARDMAN SQUARE SPINNINGFIELDS	BI004.19.312 B	FOCUS DESIGN