COLT

Louvre

Screening & Ventilation

Architectural Solutions - Louvre

Introduction

Front cover image

One London Wall, London.
Colt provided an elliptical plant room louvre screen for this prestigious commercial office development designed by Foster & Partners. The Main Contractor was Sir Robert McAlpine.

C-Plex, West Bromwich.
Trapezoidal 2UL louvre panels.

INTRODUCTION

Louvre systems are popular with designers for many applications in industrial and commercial buildings. Their purpose can be to control light entry, to provide ventilation whilst maintaining rain defence, to provide screening, or a combination of these. They can also be provided simply for aesthetic impact.

This brochure describes Colt's range of screening, ventilation and rain defence louvre systems, as well as acoustic louvres.

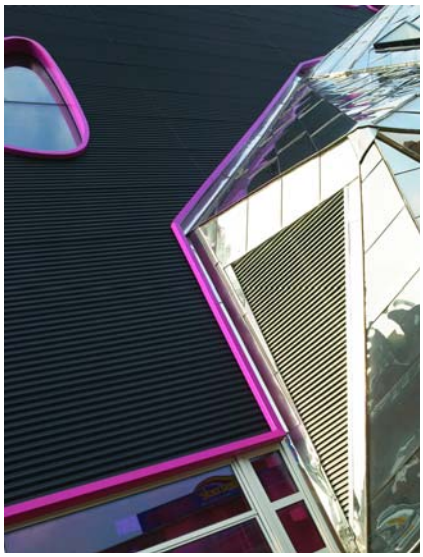

FEATURES & BENEFITS

- **Aesthetically pleasing**. Colt louvre systems have a distinctive sharp louvre profile.

- **Reduced energy costs**. Colt louvre systems are highly aerodynamically efficient. This reduced air resistance allows the plant and the aperture to be smaller thereby saving running costs.

- **Enhanced performance**. Colt louvre systems are both aerodynamically efficient and have a remarkably high resistance to weather.

- **Proven performance**. All Colt louvre systems have been tested to EN 13030:2001.

- **Easy to install**. Colt louvre systems can be either be delivered to site pre-assembled or as a kit of parts.

- **A wide range**. Colt louvre systems are available in various shapes, configurations, materials, finishes and coatings to meet the requirements of almost any project.

  Louvres can be extruded or roll-formed; polyester powder painted, pre-coated or anodised, perforated, or stucco embossed.

  Besides aluminium and stainless steel profiles, there are all manner of glass, textile, wood, terracotta clay and translucent acrylic louvres available depending upon aesthetic and energetic requirements.

  There are also a wide range of accessories, including single skin or insulated blanking panels, acoustic modules, guards and meshes, doors and turrets.

- **Upgradeable louvre**. Colt can upgrade "live" areas to double or triple bank configurations at a later stage than the installation. Please see page 7 for more details.

- **Design input provided by Colt**. Colt louvre systems can be uniquely configured to provide the solution to your needs. Software programs are freely available to assist with this. It's easy to size a panel according to a maximum pressure drop, or to specify the appropriate louvre bank configuration based on a set flow rate and maximum pressure drop.

With Colt louvre systems, the possibilities are endless.

COLT LOUVRE SYSTEMS

Colt offers two generic types of louvre systems:

Screening Louvre: Single Bank Universal roll formed Louvre and exruded 'E' Series ESC Louvre.

Ventilation and Rain Defence Louvre: Double and Triple Bank Universal roll formed Louvre, and 'E' Series ERD, a Single Bank extruded rain defence Louvre.

Portway School, Bristol
Pre-assembled 3UL louvre turrets on top of natural vent shafts.

1UL Shallow | 1UL Deep | ESC | 2UL Shallow | 2UL Deep | ERD | 3UL Shallow | 3UL Deep

Technical Standards

INTRODUCTION

Specifying louvre is always a compromise, and requires some judgement to take into account the particular needs of each application. At one end of the scale for example a car park may require maximum ventilation but little protection from rain penetration. Alternatively, a plant room containing special machinery or electrical equipment may still need high levels of ventilation but with maximum protection from water entry.

The ideal design solution is to produce a louvre system that offers the best RAIN DEFENCE and AERODYNAMIC PERFORMANCE. Unfortunately this seems to be unachievable. But nothing matches the overall performance standards set by the Colt Universal Louvre range.

BACKGROUND

There has been a problem for many years in quantifying the performance of louvre systems due to the competing test standards and lack of application guidance for designers.

The European Standard EN 13030:2001 "Ventilation for buildings – Terminals – Performance testing of louvres subjected to simulated rain" helps by providing a useful classification method. However, the responsibility for recommending classifications for particular applications still remains with the designer or specifier.

This guide is therefore intended to assist designers and specifiers to select the most appropriate louvre performance classification to suit each specific application.

CONSIDERATIONS

Site location and **exposure**
Severity of local (site) **weather conditions**
Location and exposure of louvres on building
Airflow rate and direction through louvre
Maximum acceptable **pressure drop**
Degree and **depth of water penetration** acceptable
Special solutions for sloping applications

EN 13030:2001 AND EQUIVALENT STANDARDS

British manufacturers of louvre systems in conjunction with HEVAC and BSRIA developed a test and classification method to help designers differentiate between alternative louvre systems to suit specific applications. The HEVAC standard formed the basis for the European standard EN 13030, which is technically identical.

BS EN13030 Test Results

Rain Defence Classification	Effectiveness (1.0 = 100%)	Rain Defence Effectiveness (%)	Actual Rain Entry Rate (litres/hr/m² louvre)
Class A	1.00	100%	0.00
	0.99	99%	0.75
Class B	0.989	98%	1.50
	0.95	95%	3.75
Class C	0.949	90%	7.50
	0.80	80%	15.0
Class D	below 0.80	70%	22.5
		60%	30.0
		50%	37.5

To help put the performance classifications into perspective the table above shows how "effectiveness" relates to actual rain entry under standard test conditions, which are representative of bad Northern European weather. The effectiveness classification should be specified for the design air inlet velocity through the louvre since it is velocity dependent.

Aerodynamic Performance

Class	Coeficient
Class 1	0.40 and above
Class 2	0.30 to 0.399
Class 3	0.20 to 0.299
Class 4	below 0.20

A high coefficient means low resistance and high airflow performance.

The test environment in the standard, at 13m/s (30mph) wind speed and 75mm/h (3 inches/h) for a period of 30 to 60 minutes, is intended to represent bad Northern European weather conditions. Two performance classifications are provided, one for rain defence and one for aerodynamic performance.

However it is worth noting that this test is based on louvre panels of only 1m x 1m in size. Whilst being very useful in allowing direct performance comparisons for louvres with different designs, it cannot accurately replicate the need for water collection and drainage needed where large louvre panels are installed.

Unlike other louvre types, Colt 2UL and 3UL panels have efficient drainage paths into their hollow section mullions, which in practice further increases their rain defence effectiveness.

The principles of EN 13030 are replicated in the USA under the AMCA Standard 500-L, "Laboratory Methods of Testing Louvers for Rating", and in Australia / New Zealand in AS/NZS 4740:2000: "Natural ventilators - Classification and performance".

APPLICATIONS

Recommendations for the selection of rain defence louvres, based on actual design inlet air velocities (for exhaust louvres take a velocity of 0 m/s, representing the worst case with the exhaust system switched off):

Class A	Where excellent rain defence is required and core velocities are above 1m/s and up to 3.5m/s.
Solution	**3 UL No appreciable water penetration**
Class A	Where excellent rain defence is required and core velocities are up to 1m/s.
Solution	**2 UL No appreciable water penetration**
Class B	Where good rain defence is required and core velocities are between 1m/s and 2.2m/s.
Solution	**2 UL Some water entry but limited depth of penetration**
Class B	Where good rain defence is required and core velocities are up to 1.5m/s.
Solution	**E Series ERD Some water entry**
Class C	Where reasonably good rain defence is of benefit and core velocities are between 2.2m/s and 3.5m/s.
Solution	**2 UL Significant water entry but limited depth of penetration**
Class C	Where reasonably good rain defence is of benefit and core velocities are between 1.5m/s and 2.3m/s.
Solution	**E Series ERD Some water entry**
Class D	Where maximum airflow is required but rain defence is not considered important.
Solution	**1 UL Only limited protection from wind driven rain**
Class D	Where maximum airflow is required but rain defence is not considered important.
Solution	**E Series ESC Only limited protection from wind driven rain**

CLASSIFICATIONS FOR COLT LOUVRE SYSTEMS

3 UL (Triple Bank)	Class A3 up to 3.5m/s
2 UL (Double Bank)	Class A2 up to 1.0 m/s Class B2 from 1.0m/s to 2.2 m/s Class C2 from 2.2m/s to 3.5 m/s
ERD (Single Bank)	Class A2 at 0m/s Class B2 up to 1.5 m/s Class C2 from 1.5m/s to 2.3 m/s Class D2 from 2.3m/s to 3.5 m/s
1 UL (Single Bank)	Class D1 all velocities
ESC (Single Bank)	Class D1 all velocities

Performance specifications should always include the design air inlet (core) velocity.

Screening Louvre

INTRODUCTION

The principal objective of screening louvre is to obstruct line of sight from normal vantage points by virtue of its design or orientation. Generally each run of louvre will have a continuous appearance unbroken by framing so as to blend in with the building, but it also can be made to provide contrast so as to provide an architectural feature.

Whilst the screening application is certainly the simplest from a performance perspective, it is arguably the most demanding from the viewpoint of aesthetics and configuration.

Colt Universal Louvre 1UL and "E" Series ESC Louvre allow maximum airflow with minimum resistance and are ideal for screening areas such as plant rooms and car parks.

DESIGN CONSIDERATIONS

- What building elements do I want to hide?
- Do I want the louvre to blend with the surrounding building structure?
- Do I want the louvre to be a feature on my building?
- What effect do I want to create?
- What material and finish do I need?
- Do I need to maximise the light entry through the louvre system?
- Should louvre blades be inverted?

COLT SCREENING LOUVRE

Colt offers two choices of screening louvre: a single bank 50mm or 100mm pitch roll-formed Universal Louvre 1UL, and a single bank 50mm pitch extruded "E" Series ESC Louvre.

Universal Louvre - 1UL

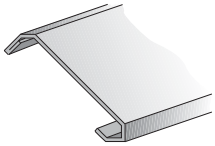

'E' Series ESC

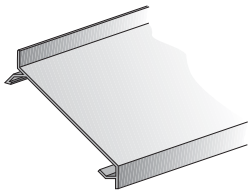

Sanyo, Hong Kong.
Louvre doors.

UCL, London.
Louvre doors to loading bay.

Experian, Nottingham.

UPGRADEABLE LOUVRE

Establishing the louvre material, colour and louvre blade arrangement is relatively straightforward. However when it comes to rain defence performance this can present problems relating to an appropriate specification, particularly at the stage in a project before full ventilation design requirements have been established.

If a basic louvre is specified, there is a risk that water penetration may occur resulting in later problems on a completed project, often with only limited and / or expensive solutions being available.

Alternatively, if the need for high performance 'rain defence' louvre is accepted, often requiring double or triple bank configurations, it may be difficult to determine the location and areas of 'functional' louvre required at an early enough stage. This can result in large areas of double or triple bank louvre being installed but subsequently blanked off. Clearly this can add unnecessary cost.

Colt has developed a design solution for Universal Louvre. This allows a basic installation of single bank louvres, which can be blanked off as part of an initial installation, but with the capability to be 'upgraded' at any later date, to suit either final design requirements or later modifications and use requirements.

This solution allows complete design flexibility at optimum cost.

Project Orange/Gerber, Bridgewater.
1UL & 2UL louvre panels for screening and ventilation.

Screening Louvre - 1UL

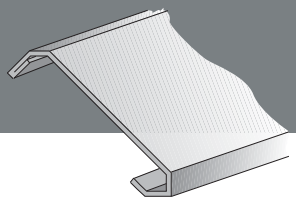

SINGLE BANK UNIVERSAL LOUVRE

Its consistent appearance and installation flexibility makes the Single Bank Universal Louvre ideal for screening and cladding applications. Single Bank Universal Louvre, 1UL (one louvre deep) is an aerodynamically shaped louvre and has two standard louvre profiles:

- Shallow (50mm pitch) and
- Deep (100mm pitch)

1UL also has two arrangements:

- Horizontal
- Vertical

Both arrangements can be inverted for roof screens, which is important when wishing to hide items which are high up, such as the lift plant on high rise apartments.

Perforated louvre allows additional daylight into this partially underground car park.

FINISHING OPTIONS

There are three standard material options for the principal components:

- Aluminium
- Mild Steel
- Stainless Steel (50mm pitch only)

There are many decorative finish options, including:

- Mill Finish
- Stoved Polyester Powder Paint
- Anodised

Perforated, Stucco and Pre-Coated Louvres are also available on request for larger applications.

The applied finishes can be supplied in two coverage levels:

- Total (all principal components)
- Partial (louvres and frames only)

OPTIONAL EXTRAS

There are a large selection of optional accessories such as:

- Mitred Corners
- Blanking Panels (Single Skin or Insulated)
- Special Shapes
- Acoustic Modules
- Guards (Bird / Insect* / Security)
- Doors
- Turrets

** Insect mesh will result in reduced airflow and additional resistance.*

Arup Fitzrovia, London.
2UL rain defence screens for plant rooms.

William Harvey Hospital, Ashford.
1UL/SH inverted louvre panels.

PERFORMANCE SPECIFICATION

A multi purpose louvre system shall be provided to achieve minimum resistance to airflow, with louvre blades to be aerodynamically shaped with no sharp edges or protrusions, to ensure the highest efficiency airflow performance.

Airflow

The following minimum aerodynamic coefficients shall be achieved when the louvre panel is tested to EN 13030:

Air Inlet - 0.43

Air Extract - 0.38

The above aerodynamic coefficients shall be established as a result of full scale wind tunnel tests.

Rain Defence

Single bank louvres are ideally applied in sheltered locations or where rain penetration may be acceptable.

The louvre system will achieve Class D1 when tested at all velocities to EN 13030:2001.

PRODUCT SPECIFICATION

Colt Single Bank Universal Louvre type 1UL having louvre blades at 50mm pitch (shallow section) or 100mm pitch (deep section).

Construction throughout shall be from high quality corrosion resistant aluminium alloy type 3005 (Colterra) or 3105 to BS 1470.

Louvre blades shall not be drilled but shall be clipped and not rivetted or screwed to structural supporting mullions. Thus allowing for expansion and contraction along their length without distortion and to provide a continuous external appearance if required.

Mullions shall be concealed at 1250mm maximum centres and their points of support along their length shall be in accordance with prevailing site wind pressures (as calculated and specified by a structural engineer) in accordance with BS 6399 part 2. Manufactured from 2mm sheet so that associated support steelwork is reduced to a minimum.

Cill and frames shall contain all peripheral fixings and be manufactured from 1.6mm sheet.

PERFORMANCE SUMMARY

- High airflow properties
- Moderate rain defence properties (subject to location and exposure)

Equally suited to applications requiring architectural screening or cladding, Colt Single Bank Louvre is ideal where a high airflow is required and where rain defence is not of primary importance.

Screening Louvre - 1UL Performance Data

Dimensions

Note: All dimensions are given as internal, external dimensions will vary depending upon material thickness

Shallow section

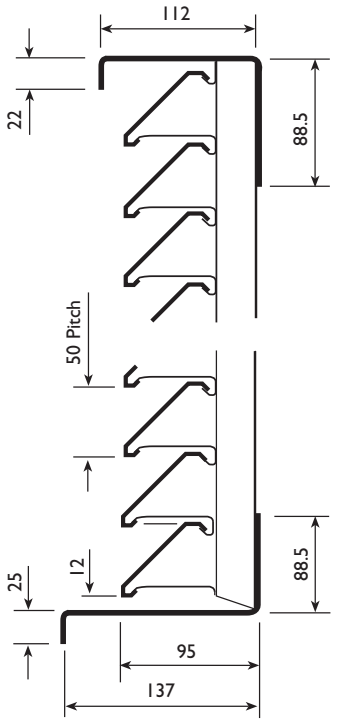

Deep section

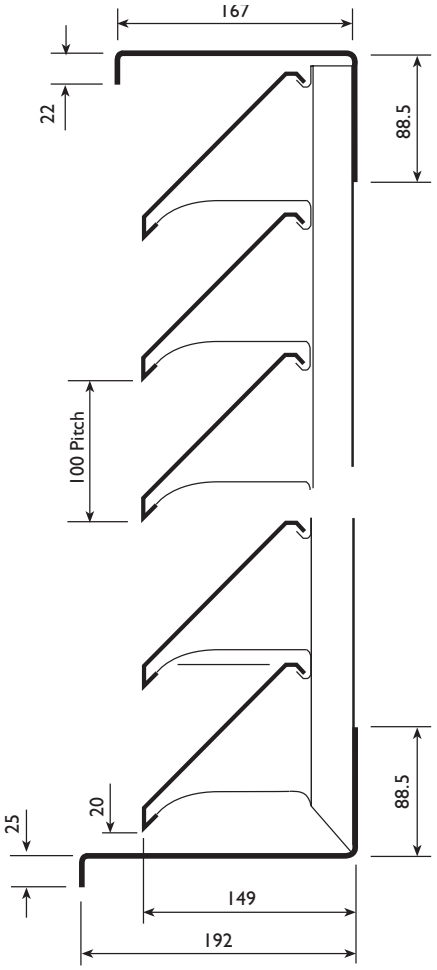

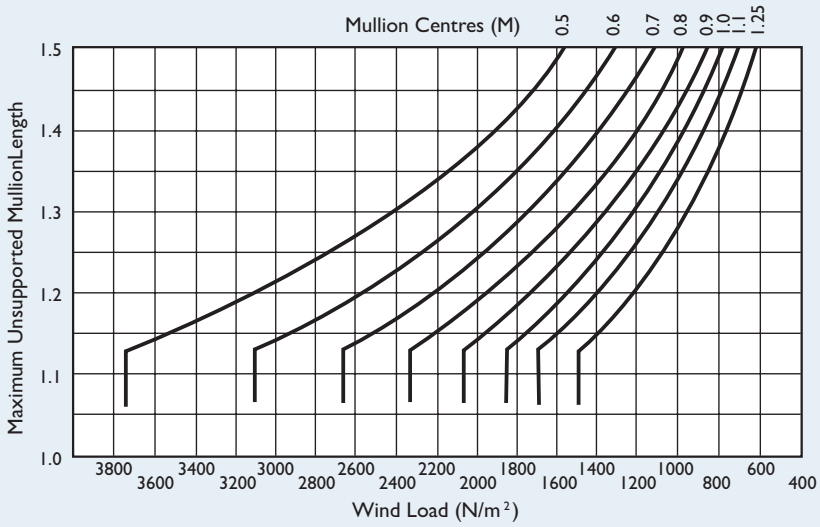

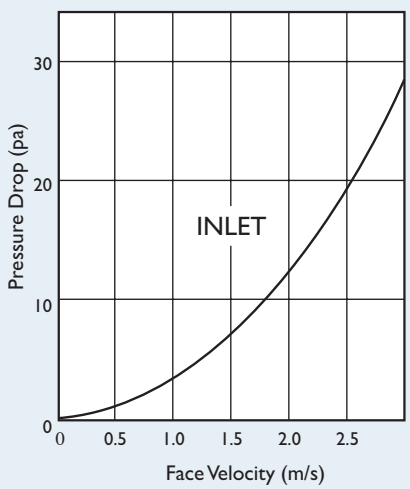

Assembly

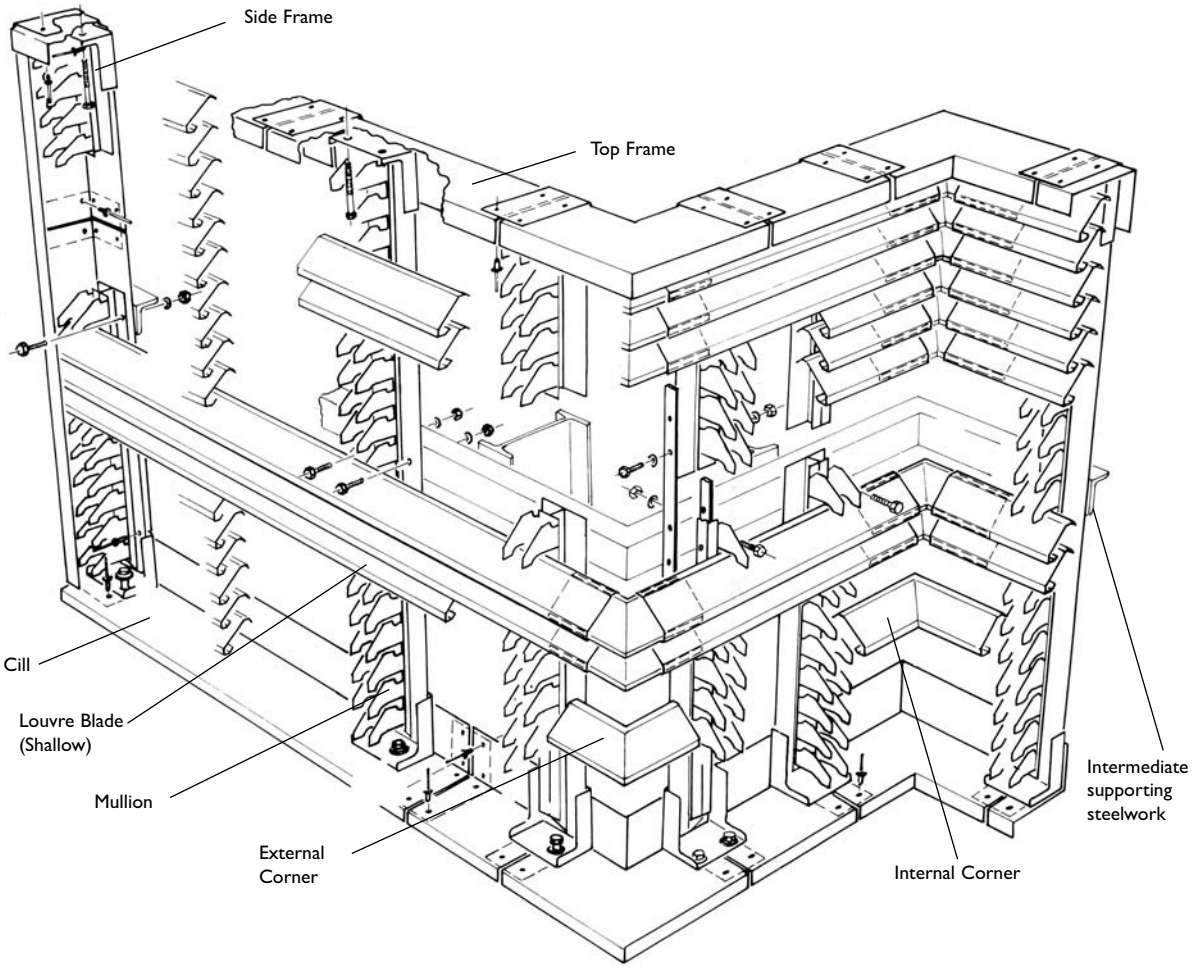

WIND SPEED CONDITIONS

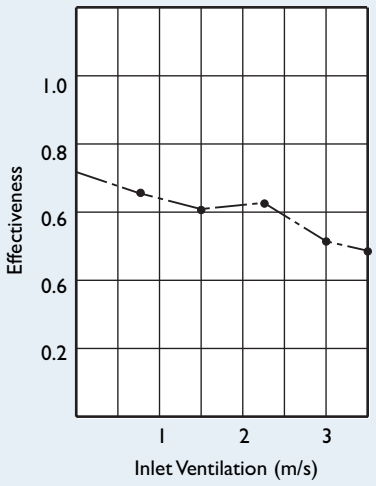

1 UL effectiveness under 13m/s
wind speed conditions
75mm/hr rainfall

Screening Louvre - ‘E’ Series ESC

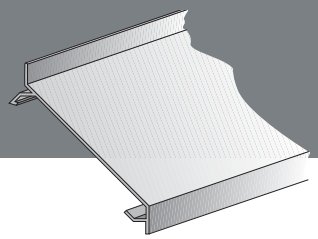

SINGLE BANK ‘E’ SERIES LOUVRE

The E Series is the latest addition to the Colt Universal Louvre range. It is an extruded aluminium, Single Bank Louvre System available in a 75mm pitch configuration.

‘E’ Series type ESC offers an alternative solution to screening and cladding applications.

It is recommended that ‘E’ Series type ESC should not be installed in exposed locations where rain penetration may not be acceptable.

FINISHING OPTIONS

Standard material options for the principal components:

- Aluminium

There are many decorative finish options, including:

- Mill Finish
- Stoved Polyester Powder Paint
- Anodised

Perforated, Stucco and Pre-Coated Louvres are not available, please see Universal Louvre.

The applied finishes can be supplied in two coverage levels:

- Total (all principal components)
- Partial (louvres and frames only)

OPTIONAL EXTRAS

There are a large selection of optional accessories such as:

- Mitred Corners
- Blanking Panels (Single Skin or Insulated)
- Special Shapes
- Acoustic Modules
- Guards (Bird / Insect* / Security)
- Doors
- Turrets

** Insect mesh will result in reduced airflow and additional resistance.*

Wales Millenium Centre, Cardiff.
Rough cut wooden 1UL/DH louvres.

Evelina’s Childrens’ Hospital, London.
Plant room louvres and doors.
.

PERFORMANCE SPECIFICATION

A simple, clean extruded louvre with sharp, crisp edges to give a continuous appearance.

Airflow

The following minimum aerodynamic coefficients shall be achieved when the louvre panels is tested to EN 13030:2001:

Air Inlet - 0.27

Air Extract - 0.26

The above aerodynamic coefficients shall be established as a result of full scale wind tunnel tests.

Rain Defence

Single bank louvres should only be applied in sheltered locations or where rain penetration may be acceptable.

The louvre system will achieve Class D1 when tested at all velocities to EN 13030:2001.

PRODUCT SPECIFICATION

Colt Single Bank 'E' Series Louvre type ESC having louvre blades at 75mm pitch.

Construction throughout shall be from high quality corrosion resistant aluminium alloy.

Louvre blades shall not be drilled but clipped and not rivetted or screwed to structural supporting mullions. Thus allowing for expansion and contraction along their length without distortion and to provide a continuous external appearance if required.

Mullions shall be concealed at 1250mm maximum centres and their points of support along their length shall be in accordance with prevailing site wind pressures (as calculated and specified by a structural engineer) in accordance with BS 6399 part 2. Manufactured from 2mm sheet so that associated support steelwork is reduced to a minimum.

Cill and frames shall contain all peripheral fixings and be manufactured from 1.6mm sheet.

C-Plex, West Bromich.
Trapezoidal 2UL louvre panels.

Screening Louvre - 'E' Series ESC

Dimensions

Note: All dimensions are given as internal, external dimensions will vary depending upon material thickness

Non flanged frame

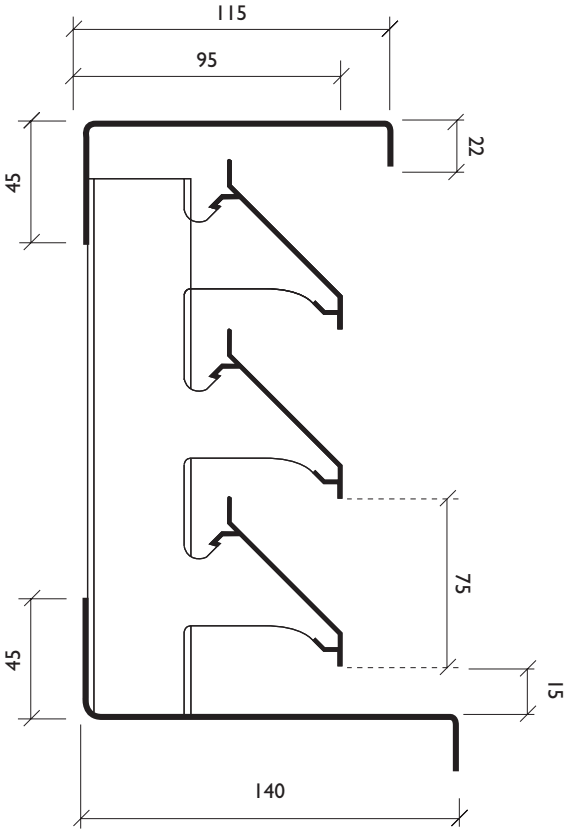

Flanged frame

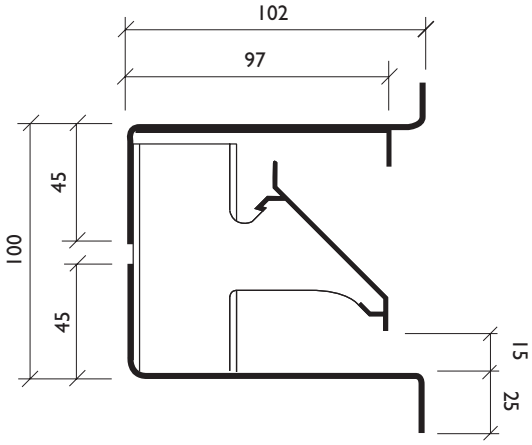

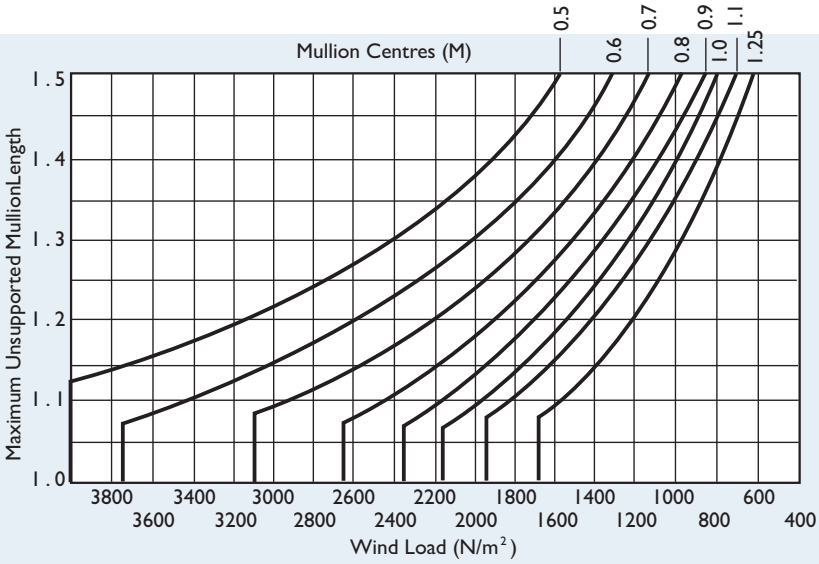

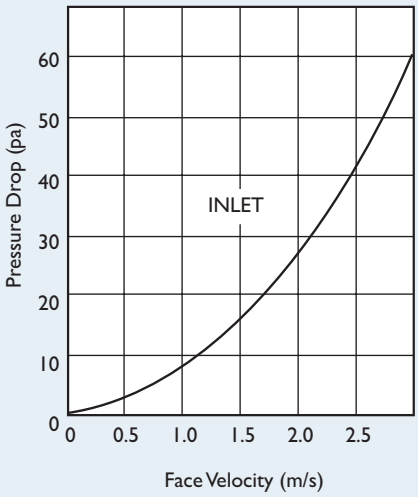

Assembly

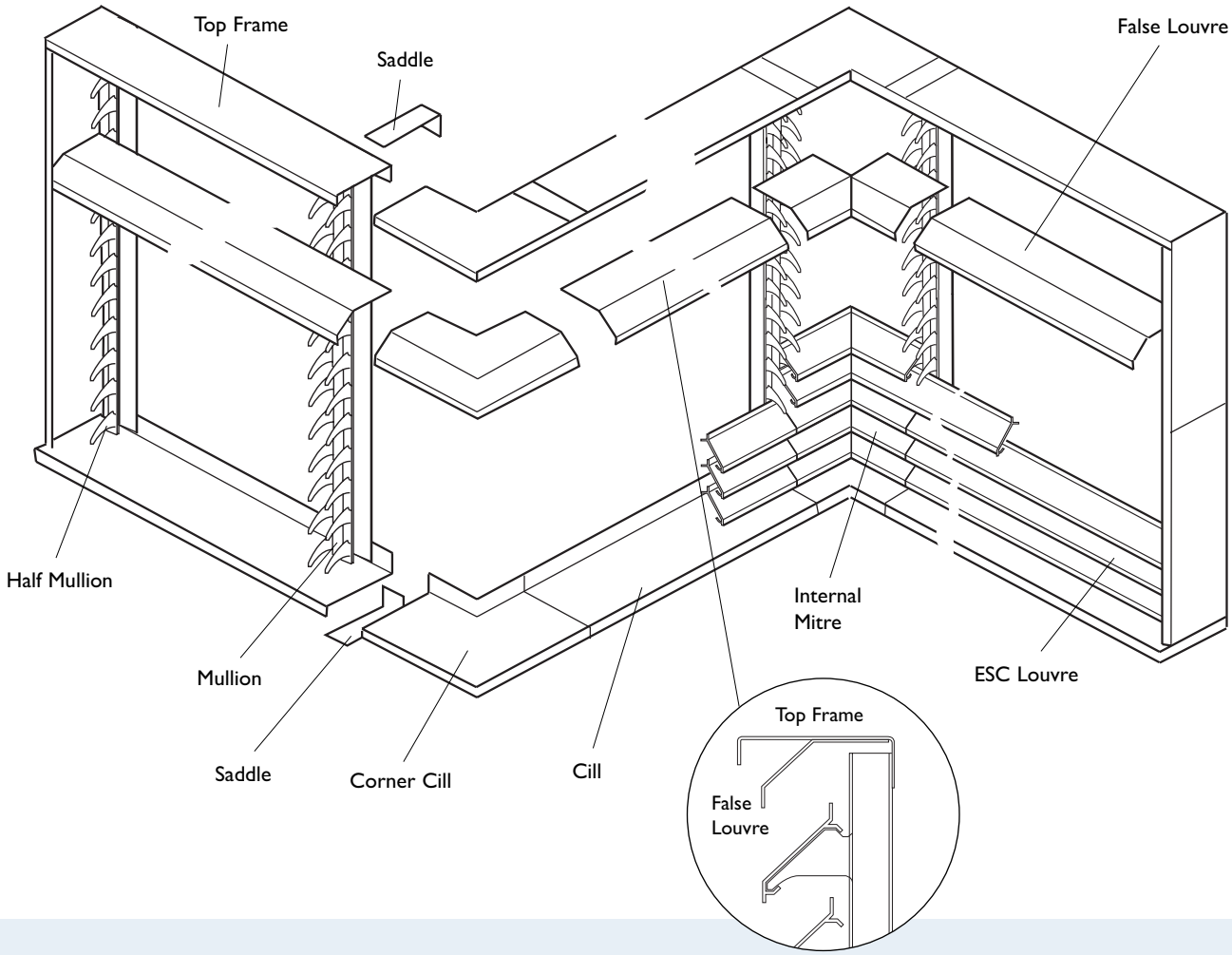

ESC MITRED CORNERS

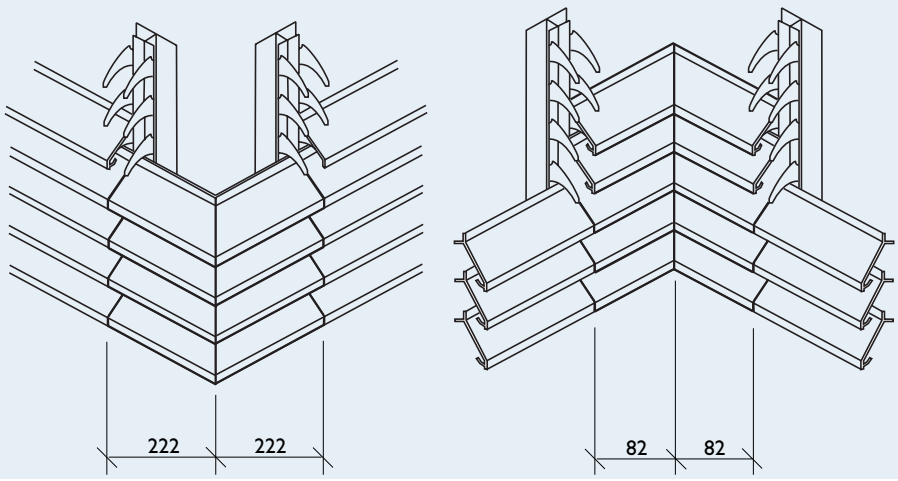

Corners are tack welded from the inside to produce a clean external appearance

Ventilation & Rain Defence Louvre

INTRODUCTION

The principal objective of ventilation and rain defence louvre is to allow the passage of air, whilst providing a measure of protection against the rain.

If your louvre has a functional role to play, your selection will need further consideration.

Specifying performance has not been helped by conflicting technical information given by louvre manufacturers which quotes percentage free areas measured in different ways, namely as resistance to airflow and aerodynamic coefficients alternatively.

For a true comparison of performance the aerodynamic coefficient and the degree of rain defence effectiveness are the only sensible measures. These have been included as part of the EN 13030 test standard, which includes a simple classification system.

DESIGN CONSIDERATIONS

How much air needs to flow through the louvre

It is worth considering that the actual area of louvre system being installed to meet the performance requirements, might result in more ventilation than is actually needed. Some areas may even need to be blanked off. However, this should not stop you from clearly specifying your ventilation requirements.

Whether you are specifying a louvre system for natural or forced ventilation, you need to know the resistance to airflow caused by the louvre system for a given flowrate.

How much rain defence is required

UPGRADEABLE LOUVRE

Please see page 7.

Indoor Recreation Centre, Ma On Shan, Hong Kong. Universal Louvre for plant room ventilation and for controllable air inlet for the smoke extraction system.

RAIN DEFENCE & PERFORMANCE

Colt offer three choices of performance louvre, a double bank roll formed louvre:

Universal Louvre - 2UL

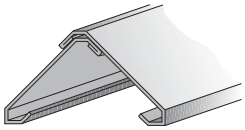

a triple bank roll formed louvre:

Universal Louvre - 3UL

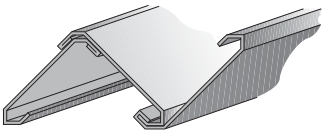

and an extruded, 75mm pitch single bank louvre:

'E' Series ERD

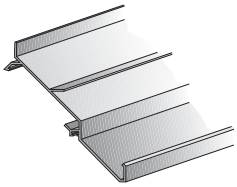

Mass Transit Railway Corporation (MTRC), Hong Kong.
Side vents fitted externally with Colt Universal Louvre in line with surrounding Colt Louvre panels.

HOW COLT UNIVERSAL LOUVRE 2UL & 3UL WORKS

1 Air and rain enters between the louvre blades.

2 Water is transferred to the second louvre where it is collected.

3 Water is transferred along the blades and into the hollow vertical mullion thus preventing re-entrainment, draining the collected water onto the cill.

RAIN DISPERSION

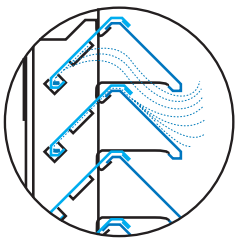

AIR FLOW

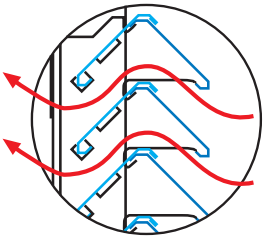

Clarks Shoes, Somerset.
Universal Louvre for screening in both painted and pre-coated finishes.

Ventilation & Rain Defence Louvre - 2UL

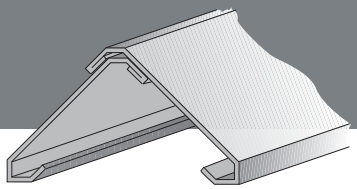

DOUBLE BANK UNIVERSAL LOUVRE

Double Bank Universal Louvre is ideal for applications requiring ventilation with a good degree of rain defence. Double Bank Universal Louvre, 2UL (two louvres deep) and has two front louvre profiles:

- Shallow (50mm pitch)
- Deep (100mm pitch)

2UL also has two arrangements:

- Horizontal and Vertical

Both arrangements can be inverted.

Xscape, Milton Keynes, UK.
2000m² of Universal Louvre including both Colt Single Bank and Double Bank Universal rain defence louvre.

FINISHING OPTIONS

There are three standard material options for the principal components:

- Aluminium
- Mild Steel
- Stainless Steel (50mm pitch only)

There are many decorative finish options, including:

- Mill Finish
- Stoved Polyester Powder Paint
- Anodised

Perforated, Stucco and Pre-Coated louvres (normally applied to front louvres blades and frames only) are also available on request.

The applied finishes can be supplied in two coverage levels:

- Total (all principal components)
- Partial (louvres and frames only)

OPTIONAL EXTRAS

There are a large selection of optional accessories such as:

- Mitred Corners
- Blanking Panels (Single Skin or Insulated)
- Special Shapes
- Acoustic Modules
- Guards (Bird / Insect* / Security)
- Doors
- Turrets

** Insect mesh will result in reduced airflow and additional resistance.*

Crawley College, Crawley.
ERD louvre panels on the plant room, and Solarfin solar shading panels.

Piccadilly Station, Manchester.
A combination of single and double bank louvres, depending on the specific airflow and rain defence requirements.

PERFORMANCE SPECIFICATION

A multi purpose louvre system shall be provided to achieve minimum resistance to airflow, with louvre blades to be aerodynamically shaped with no sharp edges or protrusions, to ensure the highest efficiency airflow performance.

Airflow

The following minimum aerodynamic coefficients shall be achieved when the louvre panel is tested to EN 13030:2001:

Air Inlet - 0.308
Air Extract - 0.25

Rain defence

The louvre system will achieve the following weathering classification when the louvre panel is tested to EN 13030:2001:

Class A2 - up to 1m/s suction velocity
Class B2 - up to 2.2m/s suction velocity
Class C2 - up to 3.0m/s suction velocity
Class D2 - up to 3.5m/s suction velocity

The louvre system shall be drained internally through hollow section vertical mullions which shall discharge water onto the cill.

The louvre system shall be capable of combining both double bank functional louvre and single bank aesthetic louvre with rear blanking panels on the same elevation without variation in external profile.

PRODUCT SPECIFICATION

Colt Double Bank Universal Louvre type 2UL having louvre blades at 50mm pitch (shallow section) or 100mm pitch (deep section, front louvre only).

Construction throughout shall be from high quality corrosion resistant aluminium alloy type 3005 (Colterra) or 3105 to BS 1470.

Front louvre blades shall not be drilled but clipped and not rivetted or screwed to structural supporting mullions allowing for expansion and contraction along their length without distortion and to provide a continuous external appearance if required.

Mullions shall be concealed at 1250mm maximum centres and their points of support along their length shall be in accordance with prevailing site wind pressures (as calculated and specified by a structural engineer) in accordance with BS 6399 part 2. Manufactured from 2mm sheet so that associated support steelwork is reduced to a minimum.

Cill and frames shall contain all peripheral fixings and be manufactured from 1.6mm sheet.

PERFORMANCE SUMMARY

- Good airflow properties
- Good rain defence properties

Equally suited to applications requiring architectural screening or cladding with ventilation and a good degree of rain defence.

Piccadilly Station, Manchester.

Ventilation & Rain Defence Louvre - 2UL

Dimensions

Note: All dimensions are given as internal, external dimensions will vary depending upon material thickness

Shallow section

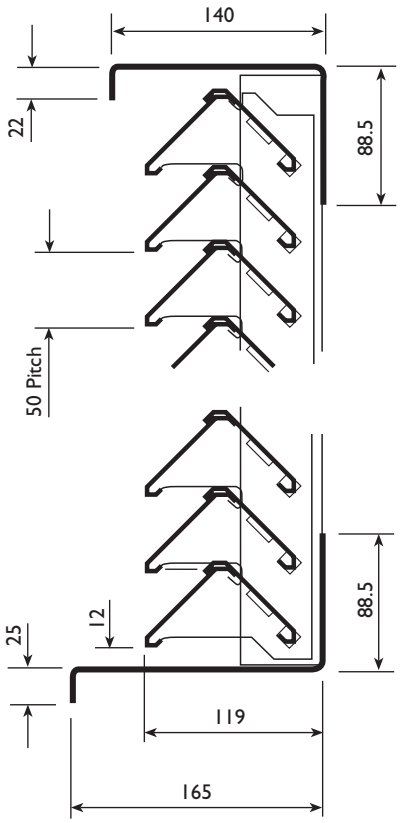

Deep section

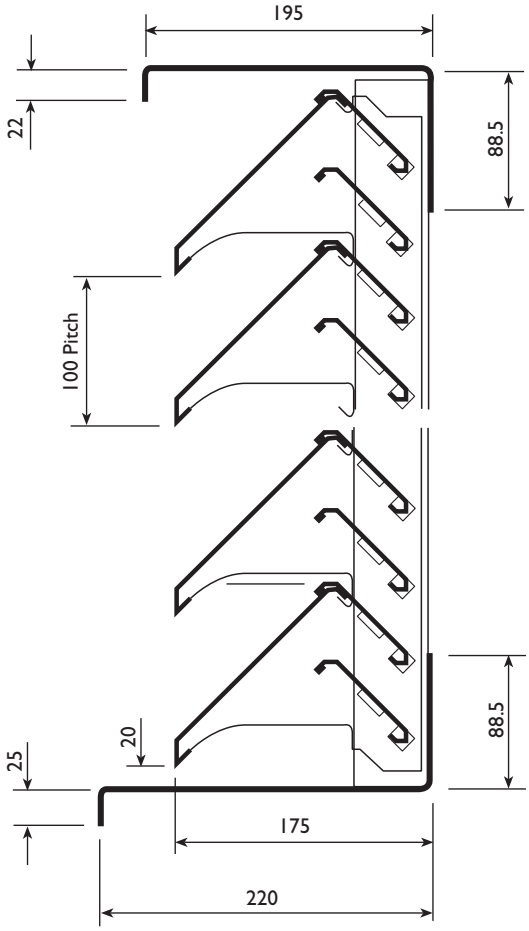

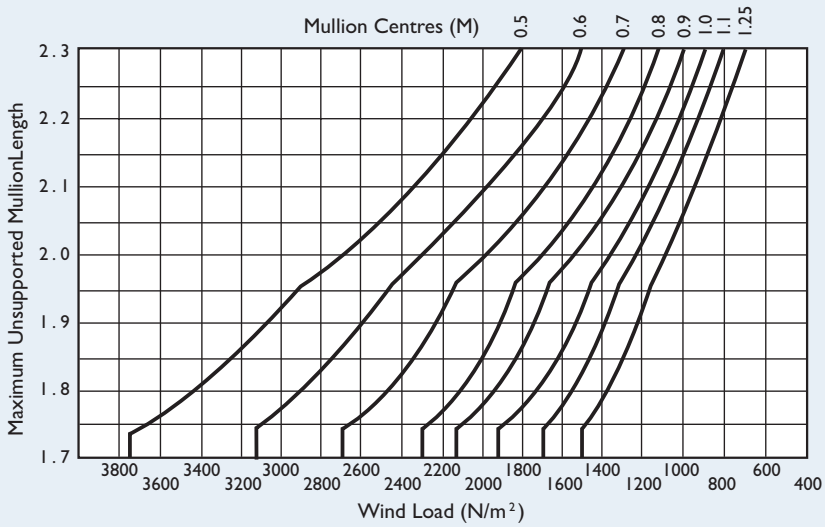

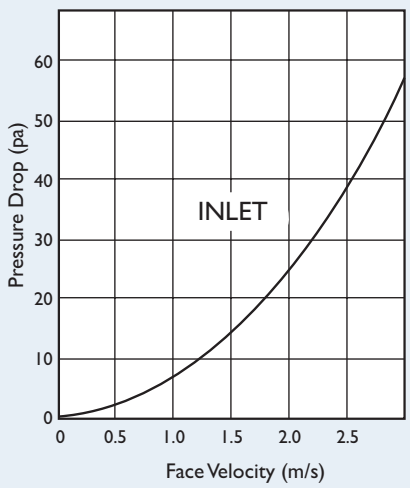

Assembly

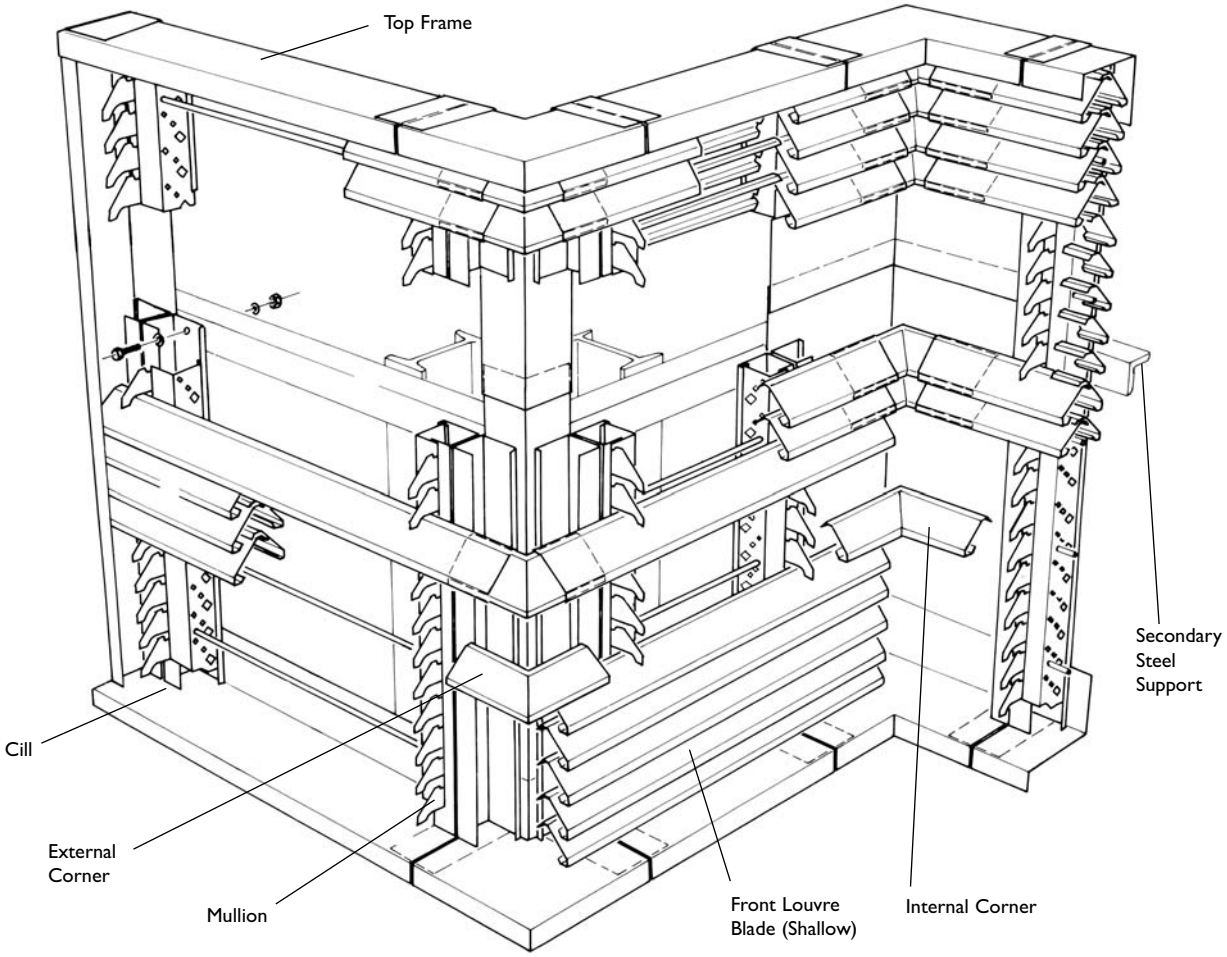

WIND SPEED CONDITIONS

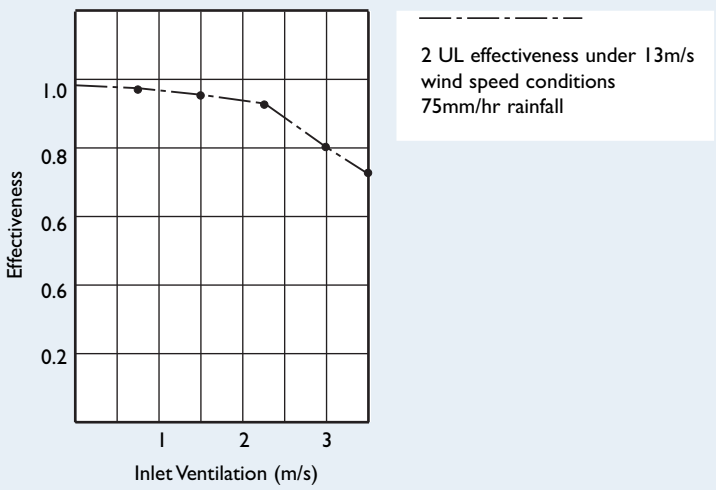

Ventilation & Rain Defence Louvre - 3UL

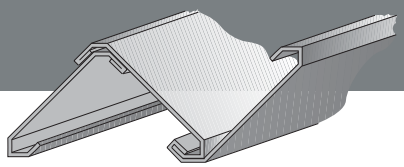

TRIPLE BANK UNIVERSAL LOUVRE

Its consistent appearance and installation flexibility makes the Triple Bank Universal Louvre ideal for screening and cladding applications requiring ventilation with maximum rain defence. Triple Bank Universal Louvre, 3UL (three louvres deep) has two front louvre profiles:

- Shallow (50mm pitch) and
- Deep (100mm pitch) Front louvre only

3UL also has two arrangements:

- Horizontal andVertical

Western Harbour Tunnel, Hong Kong.
Triple bank facetted circular louvre installed to handle the high air volumes required and to provide maximum rain protection even in typhoon conditions.

FINISHING OPTIONS

There are three standard material options for the principal components:

- Aluminium
- Mild Steel and
- Stainless Steel (50mm pitch only)

There are many decorative finish options, including:

- Mill Finish
- Stoved Polyester Powder Paint and
- Anodised

Perforated, Stucco and Pre-Coated louvres (normally applied to front louvres blades and frames only) are also available on request.

The applied finishes can be supplied in two coverage levels:

- Total (all principal components)
- Partial (louvres and frames only)

OPTIONAL EXTRAS

There are a large selection of optional accessories such as:

- Mitred Corners
- Blanking Panels (Single Skin or Insulated)
- Special Shapes
- Acoustic Modules
- Guards (Bird / Insect* / Security)
- Doors
- Turrets

** Insect mesh will result in reduced airflow and additional resistance.*

Indoor Recreation Centre, Ma On Shan, Hong Kong.
Universal Louvre for plant room ventilation and for controllable air inlet for the smoke extraction system.

The Light, Leeds.
Single bank 1UL louvre upgraded to 3UL for "live" areas.

PERFORMANCE SPECIFICATION

A multi purpose louvre system shall be provided to achieve minimum resistance to airflow, with louvre blades to be aerodynamically shaped with no sharp edges or protrusions, to ensure the highest efficiency airflow performance.

Airflow

The following minimum aerodynamic coefficients shall be achieved when the louvre panel is tested to EN 13030:2001:

Air Inlet - 0.277
Air Extract - 0.22

Rain defence

The louvre system will achieve the following weathering classification when the louvre panel is tested to EN 13030:2001:

Class A3 - up to 3.5m/s suction velocity

The louvre system shall be drained internally through hollow section vertical mullions which shall discharge water onto the cill.

The louvre system shall be capable of combining both double bank functional louvre and single bank aesthetic louvre with rear blanking panels on the same elevation without variation in external profile.

PRODUCT SPECIFICATION

Colt Triple Bank Universal Louvre type 3UL having louvre blades at 50mm pitch (shallow section) or 100mm pitch (deep section, front louvres only).

Construction throughout shall be from high quality corrosion resistant aluminium alloy type 3005 (Colterra) or 3105 to BS 1470.

Front louvre blades shall not be drilled but clipped and not rivetted or screwed to structural supporting mullions allowing for expansion and contraction along their length without distortion and to provide a continuous external appearance if required.

Mullions shall be concealed at 1250mm maximum centres and their points of support along their length shall be in accordance with prevailing site wind pressures (as calculated and specified by a structural engineer) in accordance with BS 6399 part 2. Manufactured from 2mm sheet such that associated support steelwork is reduced to a minimum.

Cill and frames shall contain all peripheral fixings and be manufactured from 1.6mm sheet.

PERFORMANCE SUMMARY

- Good airflow properties
- Excellent rain defence properties

Suited to applications requiring architectural screening or cladding with excellent rain defence protection even with high air intake velocities.

Turbine Surface Technologies, Nottingham, UK.
Customer comment:
"Colt was the only company capable of handling a combined package of natural extract ventilation, solar shading louvre and screening & ventilation louvre".

Ventilation & Rain Defence Louvre - 3UL

Dimensions

Note: All dimensions are given as internal, external dimensions will vary depending upon material thickness

Shallow section

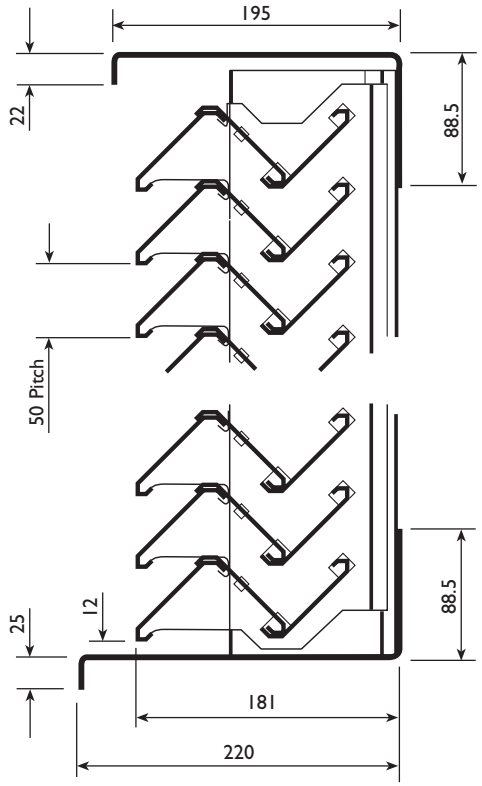

Deep section

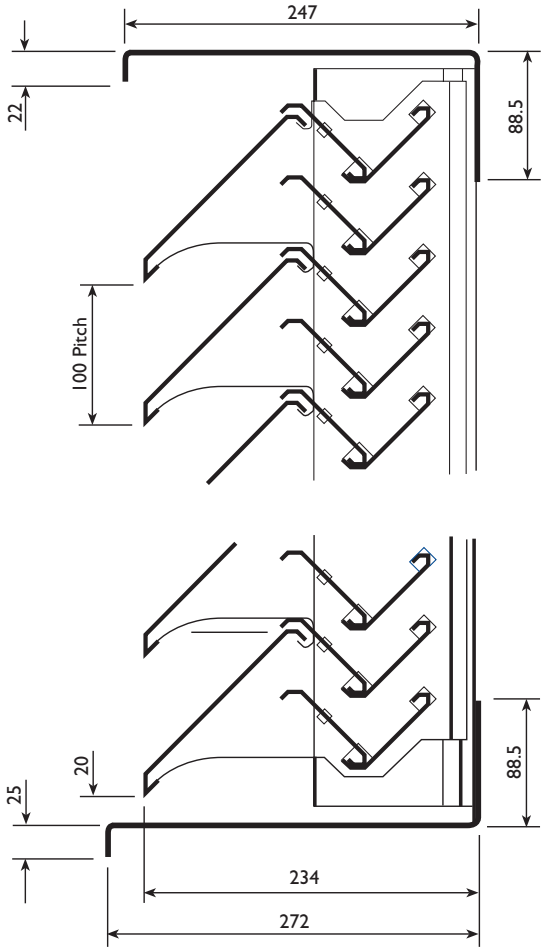

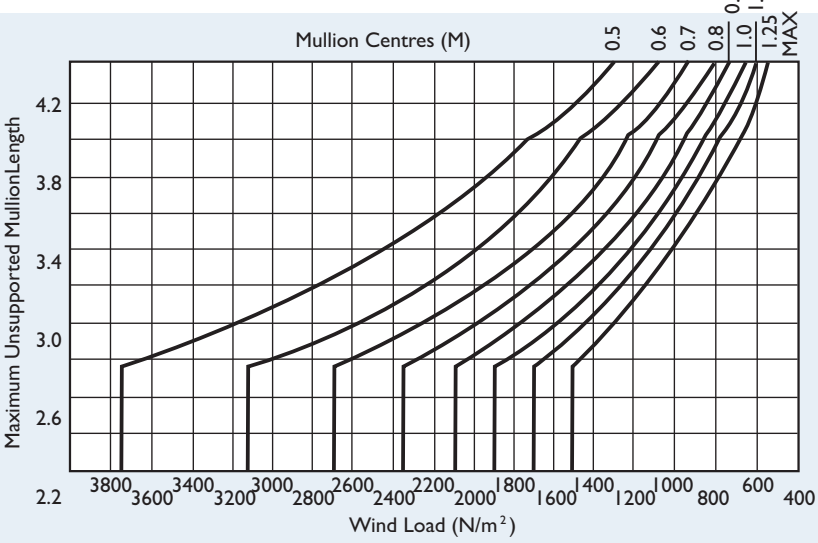

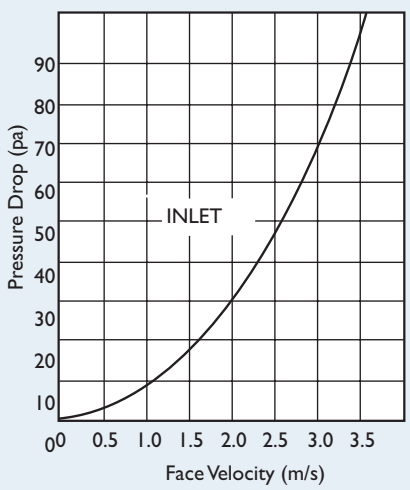

Assembly

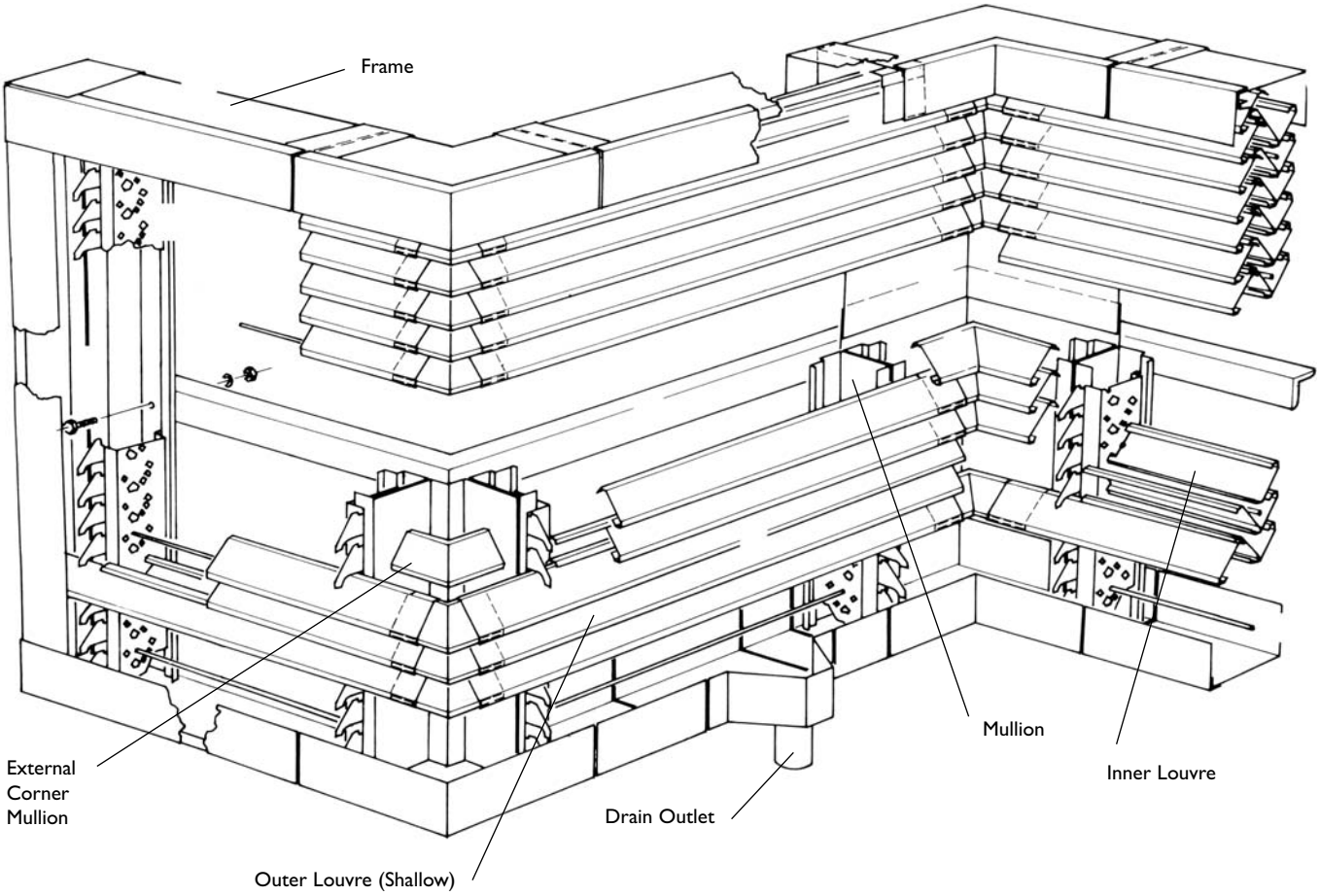

WIND SPEED CONDITIONS

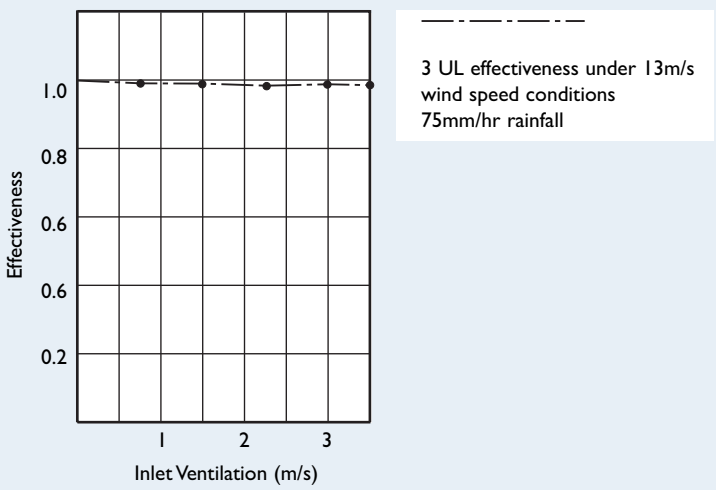

Ventilation & Rain Defence Louvre - ‘E’ Series ERD

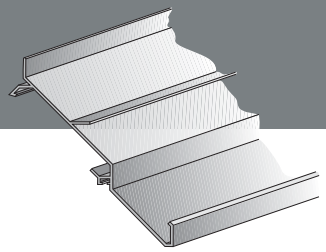

SINGLE BANK ‘E’ SERIES ERD LOUVRE

‘E’ Series type ERD is an extruded aluminium, single bank louvre system available in a 75mm pitch configuration.

‘E’ Series type ERD offers a competitive solution to screening and cladding applications which require a good degree of rain defence.

Kowloon Canton Railway Corporation, Hong Kong. Colt inverted Universal Louvre is used extensively for this new underground station to provide high volume airflow with rain defence for plant rooms, entrances, vent shafts and external decoration.

FINISHING OPTIONS

Standard material for all principal components:

- Aluminium

There are many decorative finish options, including:

- Mill Finish
- Stoved Polyester Powder Paint
- Anodised

Perforated, Stucco and Pre-Coated louvres are not available, please see Universal Louvre.

The applied finishes can be supplied in two coverage levels:

- Total (all principal components)
- Partial (louvres and frames only)

OPTIONAL EXTRAS

There are a large selection of optional accessories such as:

- Mitred Corners
- Blanking Panels (Single Skin or Insulated)
- Special Shapes
- Acoustic Modules
- Guards (Bird / Insect* / Security)
- Doors
- Turrets

** Insect mesh will result in reduced airflow and additional resistance.*

ERD rain defence louvre to plantroom enclosures.

National Physical Laboratory, Teddington.
1UL/SH panels with upgradeable
2UL/SH panel sections.

PERFORMANCE SPECIFICATION

A simple, clean extruded louvre with sharp, crisp edges to give a continuous appearance.

Airflow

The following minimum aerodynamic coefficients shall be achieved when the louvre panel is tested to EN 13030:2001:

Air Inlet - 0.30
Air Extract - 0.29

Rain defence

The louvre system will achieve the following weathering classification when the louvre panel is tested to EN 13030:2001:

Class A2 - up to 0m/s suction velocity
Class B2 - up to 1.5m/s suction velocity
Class C2 - up to 2.0m/s suction velocity
Class D2 - up to 3.5m/s suction velocity

PRODUCT SPECIFICATION

Colt Single Bank 'E' Series Louvre type ERD having louvre blades at 75mm pitch, shallow section only.

Construction throughout shall be from high quality corrosion resistant aluminium alloy.

Louvre blades shall not be drilled but clipped and not rivetted or screwed to structural supporting mullions allowing for expansion and contraction along their length without distortion and to provide a continuous external appearance if required.

Mullions shall be concealed at 1250mm maximum centres and their points of support along their length shall be in accordance with prevailing site wind pressures (as calculated and specified by a structural engineer) in accordance with BS 6399 part 2. Manufactured from 2mm sheet such that associated support steelwork is reduced to a minimum.

Cill and frames shall contain all peripheral fixings and be manufactured from 1.6mm sheet.

Ventilation & Rain Defence - 'E' Series ERD

Dimensions

Note: All dimensions are given as internal, external dimensions will vary depending upon material thickness

Non flanged frame

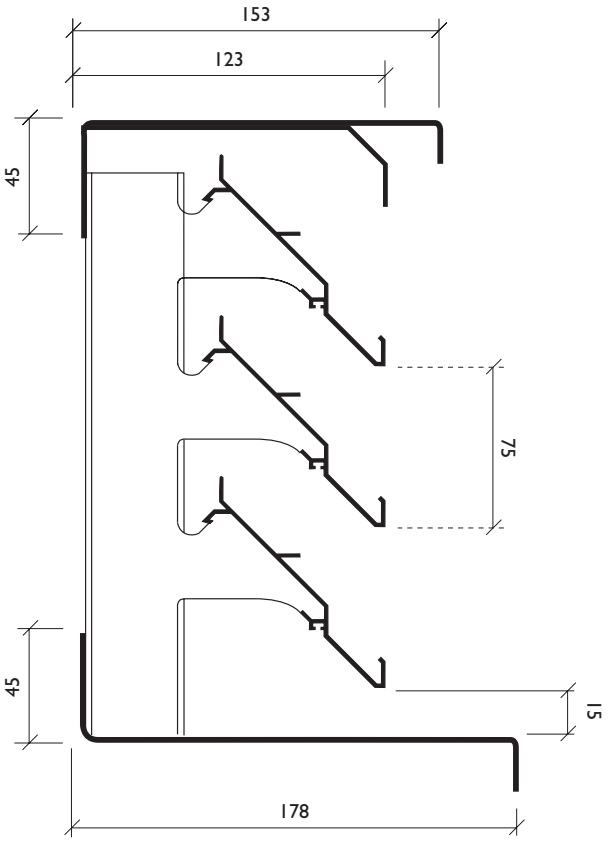

Flanged frame

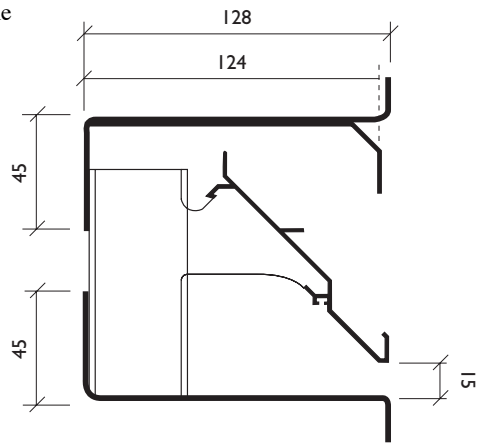

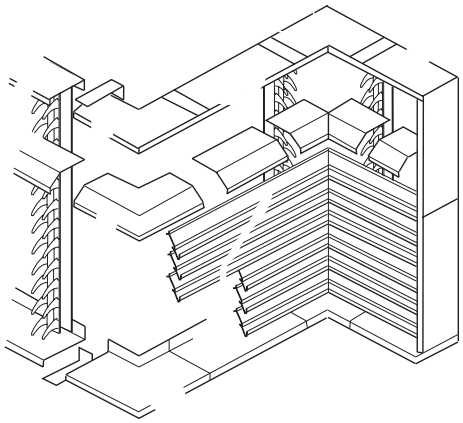

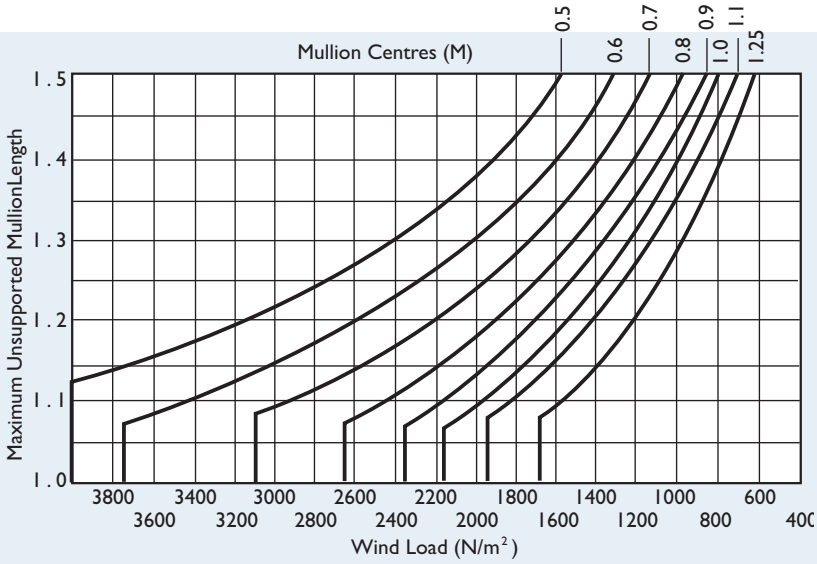

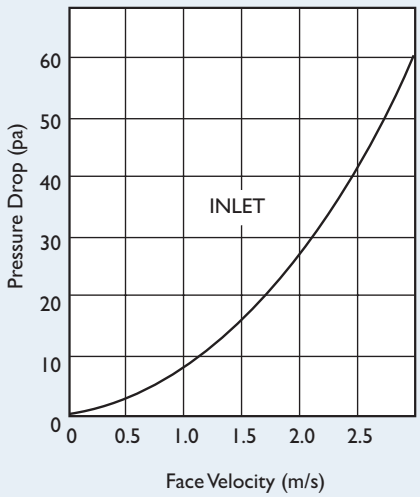

Wales Millenium Centre, Cardiff.
Addenbrookes Car Park , Cambridge.
Bexley Business Academy, Bexley.

Eastbourne Terrace, London.
Evelina's Childrens' Hospital, London.
Crawley College, Crawley.

Burj Al Arab, Jumeirah Beach, Dubai.

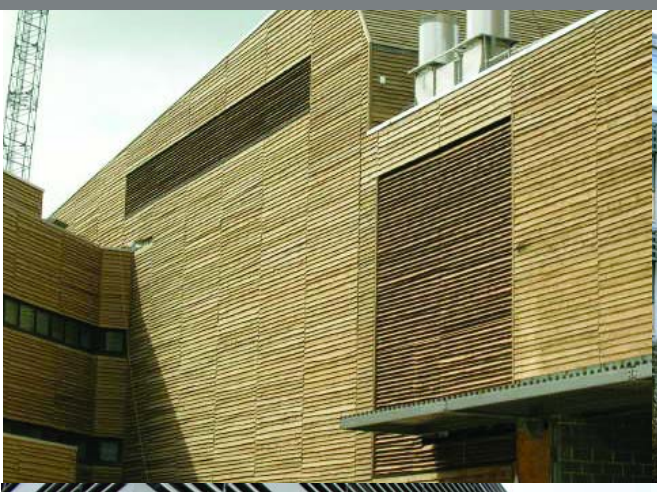

Acoustic Louvre

INTRODUCTION

As part of the Colt Universal Louvre range, Colt can provide acoustic louvre panels for mounting behind the louvre.

Plant room openings, cooling towers, condenser plant etc., will produce sound pressure levels which may exceed existing or required noise criteria at prescribed distances from the building. Colt is able to provide attenuation for the Colt Universal Louvre System that will meet the most stringent criteria.

If a single bank of elements does not provide the required noise control, a double bank may be specified. As an alternative, duct silencers may be selected to give the desired noise reduction.

To ensure the most economic solution, noise control must be considered at the earliest possible design stage. Retrofit installations can be significantly more expensive. If in doubt, please contact Colt International.

ACOUSTIC RANGE

There are two acoustic louvre models:

Type R

Optimum acoustic performance with normal pressure drop.

Type LP

Normal acoustic performance with minimum pressure drop.

MATERIAL

The outer casing shall be of no less than 1.2mm galvanised mild steel sheet. The acoustic louvre blades shall be of aerofoil configuration formed from 0.7mm perforated galvanised mild steel sheet on the inner surface and 0.7mm galvanised mild steel sheet externally.

Modules

Acoustic louvre banks over 1220mm wide and/or 3660mm high will normally be supplied as two or more modules for site assembly.

Infill

The infill shall be in organic mineral wool or glass fibre of 47kg/m^3 density and packed under not less than 5% compression to eliminate voids due to settlement. The infill shall be inert, as well as vermin, rot and moisture proof.

Type R

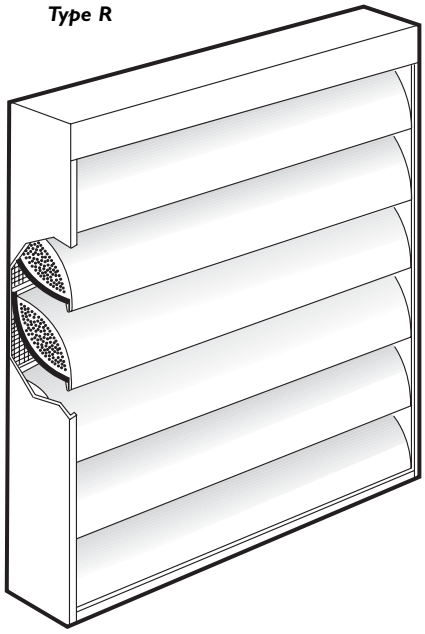

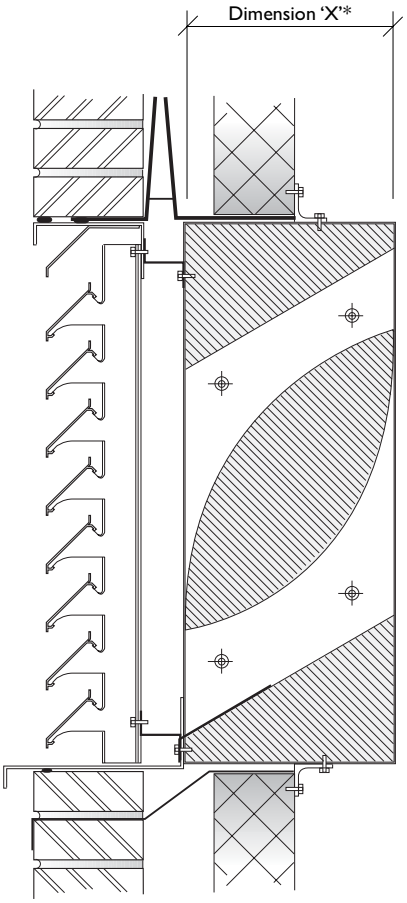

Vertical section through Colt 'E' Series ESC 75 pitch louvre panel with acoustic module into brickwork opening.

** Dimension 'X' is a minimum of 300mm or greater depending on the acoustic performance requirements.*

PERFORMANCE

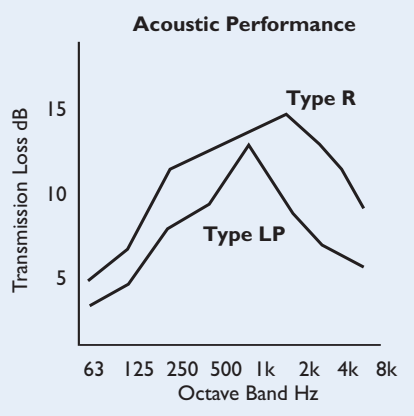

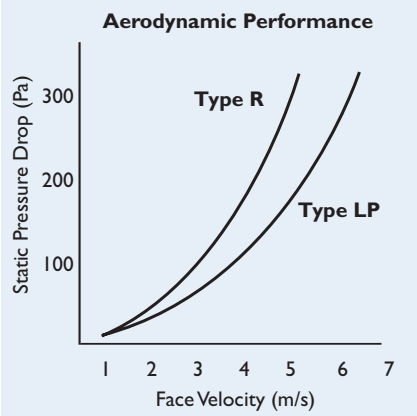

ACOUSTIC PERFORMANCE

Octave Band Centre Frequency, Hz	1 63	2 125	3 250	4 500	5 1k	6 2k	7 4k	8 8k
Model R	5	7	11	12	13	14	12	9
Model LP	4	5	8	9	12	9	7	8

AERODYNAMIC PERFORMANCE

Acoustic Louvre Model	Aerodynamic Coefficient (cv)	Pressure Loss (ζ)
Model R	0.24	17.3
Model LP	0.29	11.5

DIMENSIONS

Acoustic Louvre Model	Module Width (mm)	Module Height (mm)
Model R	610, 914 or 1219	305 to 3653 in 305mm increments
Model LP	610, 914 or 1219	356 to 3556 in 356mm increments

TERMINOLOGY

Weather Louvre

A device intended to allow the passage of inlet or exhaust air while minimising the ingress of rain (HEVAC).

Acoustic Louvre

Specially designed louvres to reduce the transmission of noise to or from a building or enclosure and may be used in conjunction with other weather louvres (HEVAC).

Free Area

The minimum area through which air can pass. Determined by multiplying the sum of the minimum distance between intermediate blades, top blade, head and bottom blade and cill by the minimum distance between jambs (AMCA).

In performance terms Free Area is a wholly meaningless measure.

Measured Free Area

A term used to indicate the open area between frame members with the louvre blades removed and used with the aerodynamic co-efficient (Cv) to calculate the aerodynamic free area and thus the pressure drop through a louvre. This is now sometimes referred to as the "core area".

Aerodynamic Area

The product of measured free area and the aerodynamic coefficient. Equal to the total area of a theoretically perfect opening. This value is used for the calculation of the pressure drop.

COLT SERVICE

Part of the Colt Group of companies, Colt Service offers a comprehensive range of maintenance packages incorporating the maintenance and repair of all building services equipment including non Colt products.

Colt Service provide a 24 hour, 365 day emergency cover as standard.

MAINTENANCE

Colt Louvre Systems are designed to be virtually maintenance free, although regular cleaning of the louvres with a mild detergent is recommended. For obvious reasons, abrasive cleaning agents and wire brushes must not be used.

CPD MEMBER
Construction CPD Certification Service

"People feel better in Colt conditions"

Colt International 1931 - 2006 75

Architectural Solutions
Climate Control
Smoke Control
Service and Maintenance

Colt International Limited
New Lane Havant
Hampshire PO9 2LY
Tel +44(0)23 9245 1111
Fax +44(0)23 9245 4220
info@coltgroup.com
www.coltgroup.com

Subject to modification. Publication number PD 45: 04/06
"Colt" and the Colt logo are registered trademarks of Colt International Licensing Limited. © Colt International Licensing Limited 2006.