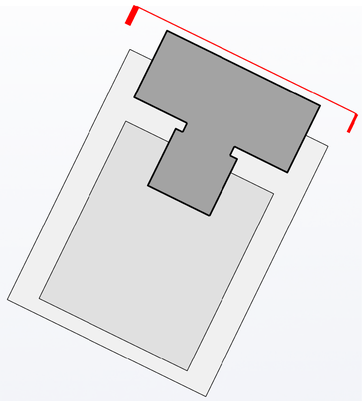



This drawing is copyright
Do not scale off dimensions.
All dimensions to be checked on site by contractor.
Contractor to report any dimensional discrepancies, errors or omissions prior to commencing on site.

NOTE
Plans created from Plowman Craven 2D measured survey. Drawings presented have been based on these survey drawings and additional information established through historic records, historic publications and site measurements/observation; where access was available. All details and dimensions to be verified through further intrusive and measured survey and access.

NORTH

Rev	Date	Description
00	24-01-2020	Planning Issue

Project Title
CIS Tower Refurbishment
Miller Street
Manchester

Drawing Title
Contextual Building
Existing North East Contextual Elevation

Job No 10246 | Scale 1:500@A1 / 1:1000@A3 | Revision 00

Status
For Planning Application

Drawing No.
10246-SHP-Z0-NE-XE-A-B5D3-G000-001

simpsonhaugh

MANCHESTER
Riverside, 4 Commercial St
Manchester M15 4RQ
+44 (0)161 835 2345
www.simpsonhaugh.com

LONDON
5-8 Roberts Place
London EC1R 0BB
+44 (0)20 7549 4000
mail@simpsonhaugh.com

© SimpsonHaugh 2017