Design Specification Report and Technical Submission Rev 06-01-20

for

Players Restaurant
1 Portland St Manchester
M1 3BE

We have followed the DEFRA guide for guidance on odour control equipment selection.

This ensures that what is propose will be in line with local authority's requirements and if the system is maintained correctly (important) they will not exhaust nuisance smoke and odours leading to complaints from nearby residents.

With this in mind a Risk Assessment enclosed as detailed in Annex C of the DEFRA Guide.

Taking into consideration the level of discharge, proximity of receptors, size of kitchen and cooking type the project requires a High Level of odour control to comply.

we have scored as below and as taken from Annex C: Risk Assessment for Odour;

Dispersion 10
Proximity of receptors 10
Size of kitchen 3
Cooking type 10
Total score 28

The type of odour abatement system that complies is as below, taken directly from the DEFRA Guide and must be to a High Level of control;

High level odour control may include:

1. Fine filtration or ESP followed by UV ozone system to achieve the same level of control as1.

Impact Risk	Odour Control Requirement	Significance Score*
Low to Medium	Low level odour control	Less than 20
High	High level odour control	20 to 35
Very high	Very high level odour control	more than 35

* based on the sum of contributions from dispersion, proximity of receptors, size of kitchen and cooking type:

Criteria	Score	Score	Details
Dispersion	Very poor	20	Low level discharge, discharge into courtyard or restriction on stack.
	Poor	15	Not low level but below eaves, or discharge at below 10 m/s.
	Moderate	10	Discharging 1m above eaves at 10 -15 m/s.
	Good	5	Discharging 1m above ridge at 15 m/s.
Proximity of receptors	Close	10	Closest sensitive receptor less than 20m from kitchen discharge.
	Medium	5	Closest sensitive receptor between 20 and 100m from kitchen discharge.
	Far	1	Closest sensitive receptor more than 100m from kitchen discharge.
Size of kitchen	Large	5	More than 100 covers or large sized take away.
	Medium	3	Between 30 and 100 covers or medium sized take away.
	Small	1	Less than 30 covers or small take away.
Cooking type (odour and grease loading)	Very high	10	Pub (high level of fried food), fried chicken, burgers or fish & chips.
	High	7	Kebab, Vietnamese, Thai or Indian.
	Medium	4	Cantonese, Japanese or Chinese.
	Low	1	Most pubs, Italian, French, Pizza or steakhouse.

The System

The system is based on Purified Air equipment or equal. The first stage of control should be the Electrostatic Precipitator ESP4500 unit.

The ESP's have been specifically designed for kitchen extract and not modified from industrial use, they have integral sumps to collect the oil, grease and smoke particles filtered out of the exhaust; this not only simplifies servicing but eradicates potentially dangerous spillage from the bottom of the units and greatly cuts down on flammable build-ups within the duct run.

The ionisation voltage has been designed to run at a negative potential which enhances the ionisation of particles and also produces more Ozone which is helpful in reducing odours in kitchen applications.

The ESP units fit in-line with the kitchen ducting and can be configured modularly to cope with all extract volume requirements

The Electrostatic Precipitator is a very efficient means for separating the particulate phase; operating efficiency when clean can be as high as 98% at particle sizes down to 0.01 micron.

The Electrostatic Precipitator does not present a high-pressure loss (175PA approx. dependent on air flow).
This gives a specific advantage in that most standard Kitchen extractor fans will have the capability of overcoming this small differential.

This is particularly advantageous when it is considered that if the pressure loss were high larger noisier fans would probably be necessary resulting in potential noise pollution.

Once Oil, Grease and Smoke are removed by the ESP the Odour will be absorbed by the Site-Safe Carbons, achieving a minimum 0.2 residence/dwell time.

UV treatment

The system is based on Purified Air equipment or equal. The first stage of control should be the UV filter range

The system is based on the synergy that occurs when ozone and ultraviolet are combined. The system comprises a quantity of lamps a percentage of which are designed to produce UV light at 185nm, converting ozone from the oxygen present in the air. The remaining lamps combine to produce UV light at 254nm which destroys the ozone and any mercaptans remaining in the proximity of the lamps. A photo catalytic liner is used to enhance the production of hydroxyl radicals, which are both very short- lived and extremely oxidising. A UV system cannot destroy smoke or other particulate although it has some affect in altering the make-up of cooking grease to a better managed compound.

How does Ultraviolet Work?

Strong sunlight permanently de-activates bacteria, spores, moulds and viruses. Over a century ago, scientists identified the part of the electromagnetic spectrum responsible for this well-known effect; wavelengths between 200nm and 300nmm, called UV-C. The mechanism of kill is well documented and unlike chemical disinfectants the organism is unable to develop any immune mechanisms. The mechanism of kill involves the absorption of photons of UV energy by the DNA, which fuses the DNA and prevents replication.
DNA (Deoxyribonucleic acid) consists of a linear chain of nitrogen bases known as purines (adenine and guanine) and pyrimidine's (thymine and cytosine).
These components are linked along the chain by sugar-phosphate components. The DNA of most forms of life is double stranded and complementary; the adenine in one strand is always opposite thymine in the other, and linked by a hydrogen bond, and guanine is always paired with cytosine by a hydrogen bond. The purine and pyrimidine combinations are called base pairs.
When UV light of a germicidal wavelength is absorbed by the pyrimidine bases (usually thymine) the hydrogen bond is ruptured. The dimer that is formed links the two bases together, and this disruption in the DNA chain means that when the cell undergoes mitosis (cell division) the DNA is not able to replicate.

How is UV Light Generated?

Ultraviolet light is most typically generated from a low- pressure lamp as described below; Low Pressure lamps are the most common lamp type and are the oldest source of ultraviolet light. They consist of a quartz envelope that separates two tungsten filaments. The lamp is evacuated and a level of mercury is introduced into the quartz envelope. The spectral output of this lamp type is monochromatic, a single line output at 253.7nm or 185nm. A fluorescent lamp is a low-pressure lamp

UV-O Range

Unlike other UV-C systems, our UV-O units are located outside of the kitchen extract duct and are connected via a spigot and spiral ducting.

KEY FEATURES

- Easy to install
- Can be retro-fitted into existing duct
- Virtually no pressure loss
- No monthly maintenance needed

Our UV-O range includes:-

- **UV-O 500 which handles up to 1 m³/sec of air flow**
- **UV-C 1000 which handles up to 2 m³/sec of air flow**

The UV-O 500 has been designed for smaller capacity commercial kitchens.

The UV-O range uses UV-C technology to produce ozone and hydroxyl free radicals to oxidise cooking odours through a process of ozonolysis.

Unlike other UV-C systems, our UV-O units are located outside of the kitchen extract duct and are connected via a spigot and small diameter ducting.

Although it is widely accepted that the best way to apply UV-C light is directly in-line with the air stream itself, performance will be impacted as the lamps get dirty.

With our UV-O units the air flow does not come from the exhaust duct but from the ambient air around the unit, which is filtered on entry. This means that it is able to provide a uniform supply of ozone and hydroxyl free radicals into the extract system with an extremely low pressure loss.

For optimum performance we would recommend between 2 & 6 seconds of dwell time to allow the ozone to work effectively upon the malodorous gasses within the duct.

UV-O 500 Unit

UV-O 1000 Unit

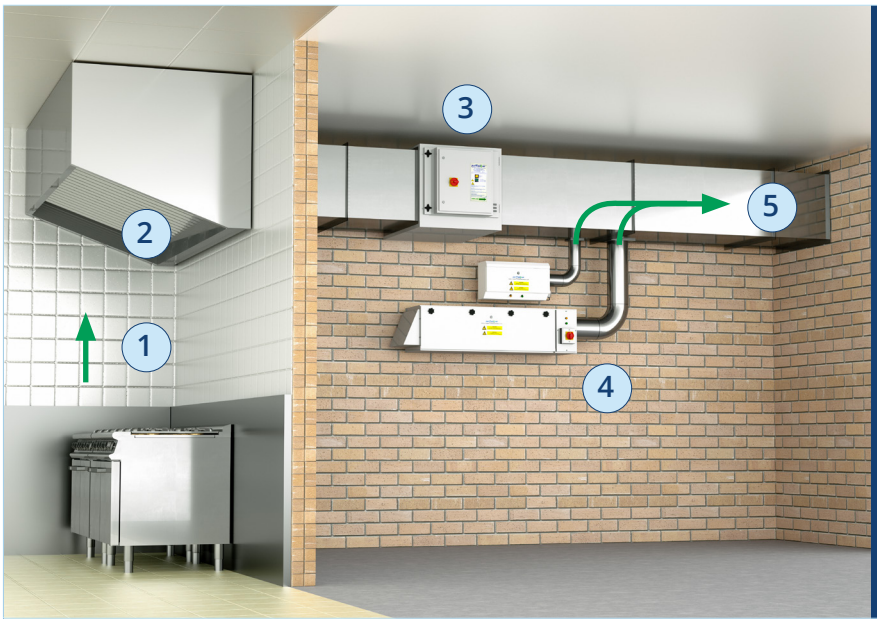

1. Cooking particulates and odours
2. Canopy Grease Filter
3. ESP - Particulate Control Unit
4. UV-O 500 (above)
   UV-O 1000 (below)
   Odour Control Units
5. Ozone joins airflow

Technical Specification

	UV-O 500	UV-O 1000
Electrical Supply	220/240V 50Hz	220/240V 50Hz
Power Consumption	120 Watts	700 Watts
Max Air Volume	up to 1m³/sec	up to 2m³/sec
Dimensions	W 605mm H 300mm D 200mm	W 1568mm H 350mm D 363mm
Weight	10.5Kg	50Kg

This unit's tried and tested UV-C technology allows for the siting of commercial kitchens in locations such as residential areas and shopping centres, where previously planning permission may not have been granted. After extensive research and development Purified Air are able to devise the best combination of lamps to provide the most effective odour control.

Safety

Ultra-Violet band C light is the most powerful of the three bands, it is a very strong oxidant and as such exposure to UV-C light is dangerous. To ensure safety the UV-C lamps are secured behind locked panels and the system has been engineered to shut down automatically when these panels are unlocked. However, since the lamps typically have a minimum life of twelve months and with the system able to operate at optimum efficiency even if one lamp fails it is unlikely that, apart from routine servicing by experienced engineers, that the system will ever need to be opened.

purified air® since 1984

Purified Air Limited, Lyon House, Lyon Rd, Romford, Essex RM1 2BG England
T: 01708 755 414 | F: 01708 721 488
enq@purifiedair.com | www.purifiedair.com

Our ESP Range

ESP 4500

- ESP 1500E which can handle up to 0.7m³/sec of air flow
- ESP 3000E which can handle up to 1.4m³/sec of air flow
- ESP 4500E which can handle up to 2.1m³/sec of air flow
- ESP 6000E which can handle up to 2.8m³/sec ofair flow

Our ESP's have been specifically designed for kitchen extract systems; they have integral sumps to collect the oil, grease and smoke particles filtered out of the exhaust. This not only simplifies servicing but eradicates potentially dangerous spillage from the bottom of the units and greatly cuts down on build-ups of grease within the ducting.

The ionisation voltage has been designed to run at a negative potential which enhances the ionisation of particles and also produces more ozone which is helpful in reducing cooking odours.

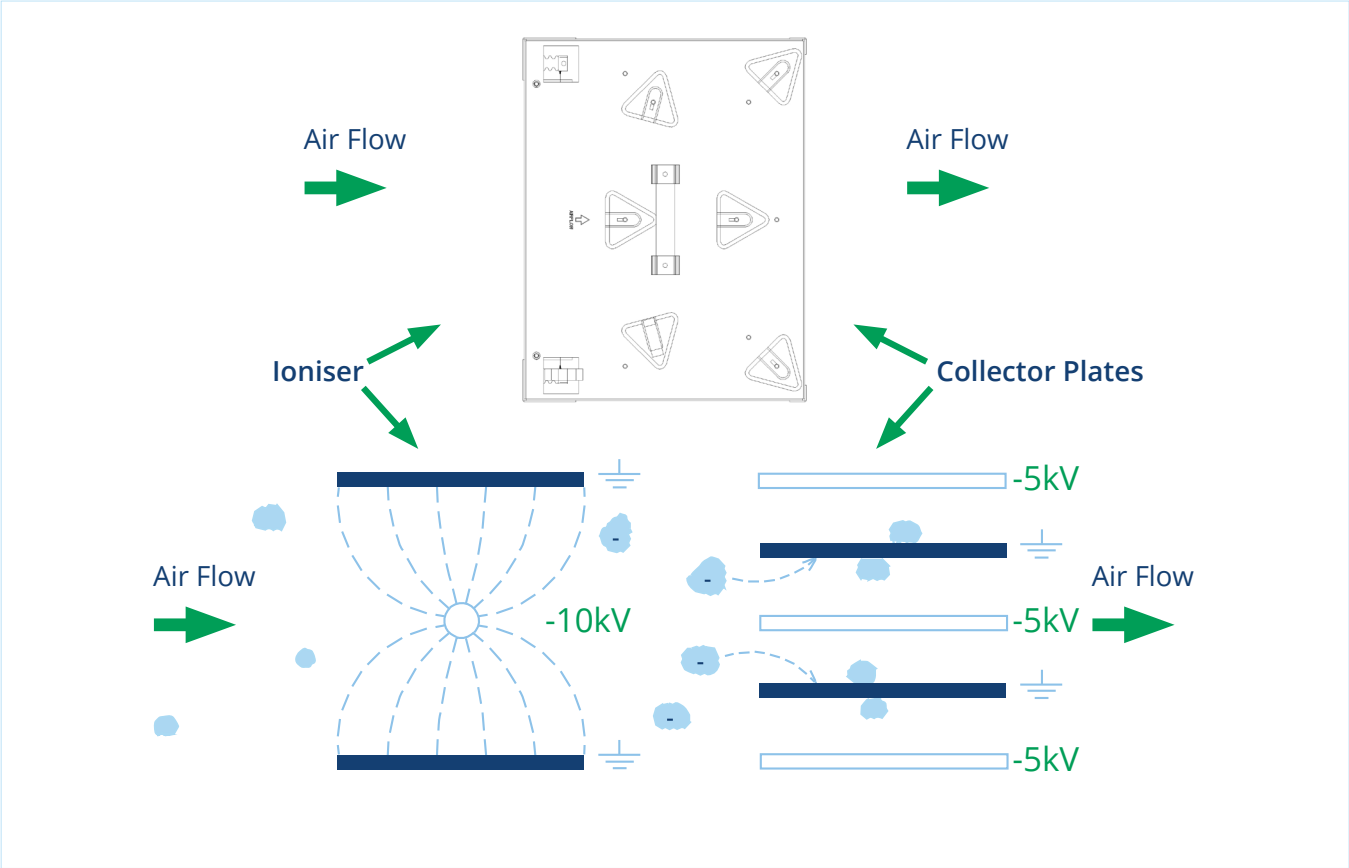

The above diagram shows, in a basic visual, how an electrostatic precipitator works. As air passes into the combined ioniser / collector cell, the particulates in the air stream are polarised to a negative potential. As they continue through the ioniser and between the collector cell plates, the polarised particulates are repelled away from the negatively charged plates and attracted to the earthed plates where they stick and so are filtered out of the air flow.

Our ESP units fit in-line with the kitchen ducting and can be configured modularly to cope with all extract volume requirements.

1. Cooking particulates and odours
2. Canopy Grease Filter
3. ESP - Particulate Control Unit
4. Airflow

KEY FEATURES

- Eliminates up to 98% of oil, grease and smoke particles
- Filters particles down to sub-micron levels
- Produces Ozone to help reduce malodours
- Designed with an integral sump
- Modular in design
- Specifically designed for commercial kitchen application
- Energy efficient: - uses no more than 50W
- Greatly reduces grease build-up within the duct run

3 ESP Units Stacked in modular formation

4 ESP Units Stacked in modular formation with a double pass

Technical Specification

	ESP 1500E	ESP 3000E	ESP 4500E	ESP 6000E
Electrical Supply	220/240V 50Hz	220/240V 50Hz	220/240V 50Hz	220/240V 50Hz
Power Consumption	20 Watts	30 Watts	40 Watts	50 Watts
Max Air Volume	up to 0.7m³/sec	up to 1.4m³/sec	up to 2.1m³/sec	up to 2.8m³/sec
Dimensions W/H/D	450mm/630mm/ 640mm	900mm/630mm/ 640mm	1350mm/630mm/ 640mm	1800mm/630mm/ 640mm
Weight	55Kg	85Kg	118Kg	153Kg

purified air® since 1984

Purified Air Limited, Lyon House, Lyon Rd, Romford, Essex RM1 2BG England
T: 01708 755 414 | F: 01708 721 488
enq@purifiedair.com | www.purifiedair.com

Woods
A Fläkt Woods Brand

AIR COMFORT

FIRE SAFETY

AIR MOVEMENT

MAXFAN COMPAC

» OFFERING HIGH PERFORMANCE, ROBUST DESIGN AND FLEXIBLE CONTROL

MAXFAN COMPAC

INTRODUCING THE MAXFAN COMPAC

THE NEW MAXFAN COMPAC DESIGNED FOR THE KITCHEN CANOPY MARKET OFFERING HIGH PRESSURE & PERFORMANCE, WITH QUALITY YOU CAN TRUST.....

The MaXfan Compac reinforces the high quality products that Fläkt Woods has provided over the years. The MaXfan Compac fan offers you; High Performance, Full Inverter Control, Operating temperature up to 80°C*, Easy Installation & Maintenance, Comparable noise levels, Compact robust lightweight design, DW172 Compliance and is available in stock for next day delivery.

The MaXfan Compac has been developed with our customers in mind, looking after you is our priority. Fläkt Woods incorporates the Woods Range of Distribution fans, your number 1 supplier of ventilation equipment in the UK.

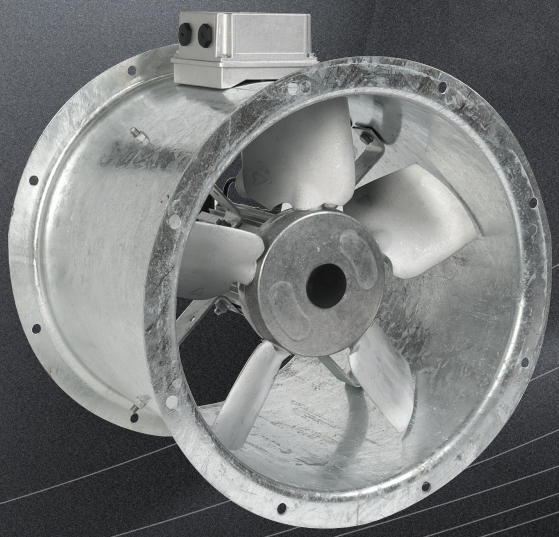

+

THE PERFECT COMBINATION

*dependent on the fan size, please refer to the specific fan technical page

MAXFAN COMPAC - THE NEXT GENERATION IN KITCHEN FANS

Designed and Manufactured in the UK

FEATURES

- 400 - 630 mm diameter
- Volumes up to 4.9m³/s
- Static Pressures up to 900 Pa (Non-stalling characteristic)
- Fans tested to ISO5801 and BS848
- High efficiency energy saving IE2 motor
- Low breakout noise levels
- Motor protection and terminal block IP55 (DW172 & Defra Compliant)
- Ambient temperatures up to 80°C (Dependant on size)
- Overheat protection as standard
- Compact robust light weight construction
- Galvanised casing for high corrosion resistance
- Full inverter control and flexibility

ELECTRICAL SUPPLY

230v/50Hz/1 Ph (3 Ph Motor) - L Type

TEMPERATURE RANGE

Suitable for temperatures up to 80°C*

*dependent on the fan size, please refer to the specific fan technical page

SIZES

400, 450, 500, 560 and 630 mm

Smaller 315 & 355 mm available on request

IMPELLERS

A unique high efficiency aerofoil section blade with a smoothed hub and clamp plate offers a high efficiency solution.

The Fläkt Woods impellers are all high pressure die cast to offer thin aerofoil sections for low generation of noise. Every cast aluminium component is X-ray examined using Real Time Radiography inspection prior to assembly. The maximum pitch angles shown allow for speed control by frequency inverter.

MOTORS

All motors are totally enclosed air stream rated with class F insulation. Constructed from aluminium or cast iron as standard with special pad mounted fixings. Although this product incorporates a three phase electric motor, by using a matched inverter solution it is suitable for use with a single phase electrical supply on site. In addition, using a frequency inverter allows the speed to be turned down to 20% of maximum speed. Suitable for horizontal or vertical shaft operation. Supplied IP55, with removable drain plugs.

Sealed for life bearings lubricated with wide temperature range grease. The complete range of motors are fitted with Thermistor OHP as standard. Motors are IE2 efficiency class as standard.

CASINGS

The MaXfan Compac is available with a galvanised casing, complete with an externally mounted pre-wired electrical terminal box. Casings are spun from sheet steel with integral pre-drilled and radiused inlet flanges. The galvanised finish gives a high resistance to corrosion and is ideal for external as well as internal use.

PRODUCT CODE

40 MaXfan Compac

- 40 - denotes the fan impeller diameter in centimetres

ACCESSORIES

Mounting Feet

Rubber AV's

Flexible Connector & Clips

0-10v Potentiometer

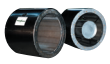

Silencer B1D/B2D Standard & Melinex

Matching Flange

ENVIRONMENT ECONOMICAL EXPERTISE

MAXFAN COMPAC QUICK SELECTION TABLE & ELECTRICAL DATA

230 V/50HZ/1 Φ - L TYPE

QUICK SELECTION TABLE

Part Number	Fan Description	Volume (m³/s) @ Pa static										
		0	50	100	200	300	400	500	600	700	800	900
EJ413456	40 MaXfan Compac	1.55	1.49	1.44	1.31	1.18	1.02	0.78	0.41			
EJ463266	45 MaXfan Compac	2.19	2.14	2.07	1.98	1.87	1.74	1.58	1.33	0.89	0.6	0.35
EJ513255	50 S MaXfan Compac	2.77	2.67	2.59	2.42	2.23	1.99	1.72	1.4	1.04	0.61	
EJ513266	50 MaXfan Compac	3.21	3.15	3.09	2.97	2.78	2.64	2.47	2.25	2.00	1.48	0.81
EJ563236	56 MaXfan Compac	4.54	4.4	4.22	3.96	3.62	3.24	2.78	2.25	1.33		
EJ623236	63 MaXfan Compac	4.87	4.66	4.52	4.19	3.81	3.44	3.00	2.51	2.1	1.53	0.79

PRODUCT AND ELECTRICAL DETAILS

Part Number	Fan Description	Temperature (°C)	Frame	kW	FLC (A)	SC (A)	Phase	Voltage	Inverter Model	Wiring Diagram	Breakout Sound Level dB(A) @ 3m	Fan Weight (kg)	Casing Length (mm)
EJ413456	40 MaXfan Compac	80	80	1.32	4.71	25.5	1	230	6.8	CD3042	40	35	375
EJ463266	45 MaXfan Compac	55	80	1.32	4.71	25.5	1	230	6.8	CD3042	43	37	375
EJ513255	50 S MaXfan Compac	65	80	1.73	6.16	35.5	1	230	6.8	CD3042	49	32	375
EJ513266	50 MaXfan Compac	65	90	2.64	9.36	52.8	1	230	9.6	CD3042	48	50.5	520
EJ563236	56 MaXfan Compac	70	90	2.64	9.36	52.8	1	230	9.6	CD3042	48	55	520
EJ663236	63 MaXfan Compac	55	90	2.64	9.36	52.8	1	230	9.6	CD3042	50	61	520

Sound pressure levels quoted are the breakout, and are an average value in dBA at 3m distance over a sphere at the duty point specified on the individual fan pages, under free field conditions. This data is presented for comparative purposes only.

MAXFAN COMPAC

230 V/50HZ/1 PH - L TYPE

PERFORMANCE CHART - 50 MAXFAN COMPAC (EJ513266)

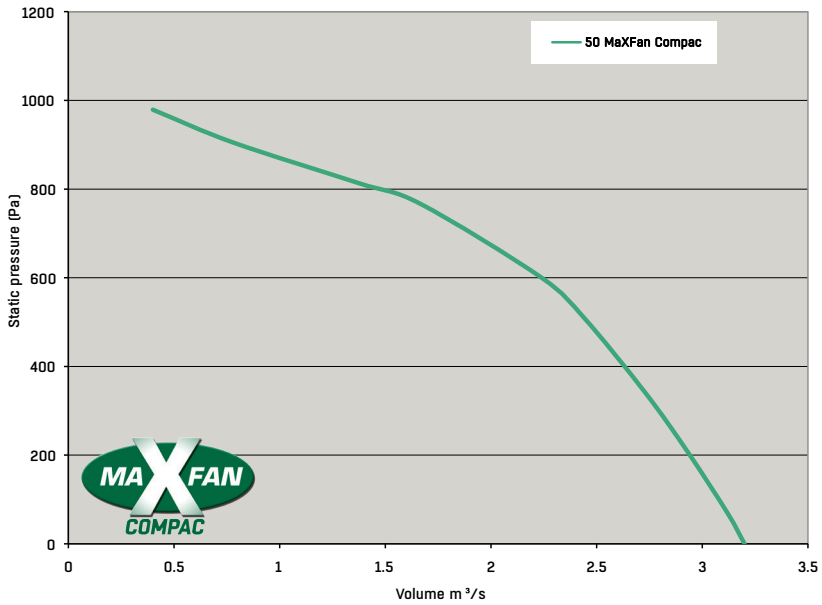

ADDITIONAL ACCESSORIES

Mounting Feet (408203)

Rubber AVs (505001)

Flexible Connector & Clips (400423)

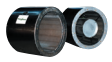

Silencers (271401)

Matching Flange (74913)

0-10v Potentiometer (EA900102)

PRODUCT AND ELECTRICAL TABLE - 50 MaXfan Compac

Part Number	Fan Description	Speed	Temperature (°C)	Frame	kW	FLC (A)	SC (A)	Phase	Voltage	Inverter Model	Wiring Diagram	Breakout Sound Level dB(A) @ 3m	Fan Weight (kg)	Casing Length (mm)
EJ513266	50 MaXfan Compac	2910	65	90	2.64	9.4	52.8	1	230	9.6	CD3042	48	50.5	520

SOUND DATA - 50 MaXfan Compac

	Sound Spectrum (Hz)								Overall	
	63	125	250	500	1k	2k	4k	8k	Lw*	LpA @ 3m**
Inlet*	83	79	87	88	86	85	81	78	94	71
Outlet*	85	79	90	89	86	86	81	79	95	72
Breakout*	75	61	68	66	61	58	59	55	77	48

*Lw dB re 10^{-12} W

**dBA re $2x10^{-5}$ Pa

Ps Sound data at 2.63m3/s @ 400Pa (static)

DRAWING - 50 MaXfan Compac

Size	Motor Frame	C	K	Weight kg Fan
500	90	520	290	51

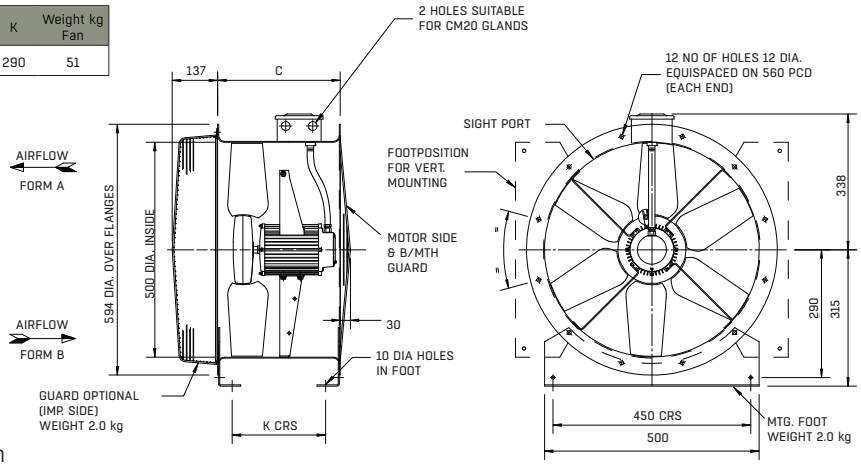

All dimension in mm

INVERTER SINGLE TO THREE PHASE

FEATURES & BENEFITS

- 1 Ph 200-240VAC to 3 Ph 200-240 VAC Electrical Supply
- Pre-Programmed for easy installation
- Max shielded cable length 25m
- Asynch motor speed control
- Ultra compact & light making it easy to install
- Simple to use Alpha-numeric display
- Included fitted potentiometer for manual speed adjustment
- Connectable as Modbus RTU offering control flexibility
- Built in RFI filter minimising interference
- Built-in brake functions with built in DC and AC brake functions
- 2xAI, 1xAO & 1xRO / RS485 connection options
- BMS enable/disable
- Maximum operating ambient 50°C
- Coated PCB standard for harsh environments
- High energy efficiency

DESCRIPTION

Our inverter is a frequency converter with unsurpassed reliability, user-friendliness, condensed functionality, and extremely easy to commission. Terminal numbers are named in the same manner as in the rest of the family, making installation easy.

It converts a single phase 200-240 VAC input into a three phase output to allow the MaXfan Compac product to use a high efficiency 3Ph, 230V motor.

A safety isolator/switch disconnector should be installed on the mains side of the drive to ensure that the mains supply can be isolated for maintenance.

Please see the image below, illustrating the connections on the bottom of the inverter drive.

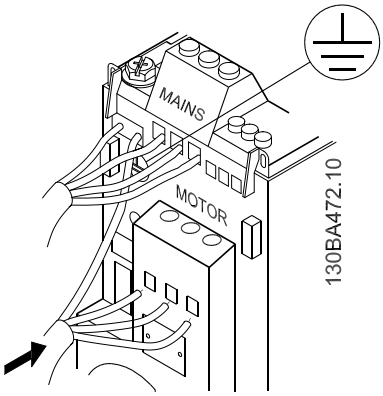

RANGE

There are two matched inverters that are specifically designed to use with our MaXfan Compac fan range. Details are shown below.

Inverter Model	Ph.	V	Amps	kW	Enc.
6.8	1-3	200-240V	6.8	1.5	M2
9.6	1-3	200-240V	9.6	2.2	M3

ACCESSORIES

Description	Part
Local Control Panel(LCP12) Digital Keypad with Pot.	EA901058

Step 1
Fit top cover on frequency converter.

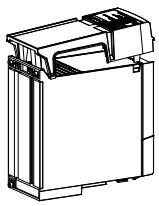

Illustration 4.14

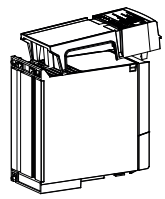

Illustration 4.15

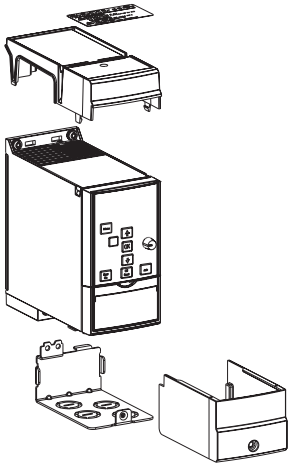

Illustration 4.16

MAXFAN COMPAC

INVERTER - QUICK INSTALLATION GUIDE

Ready – Steady – Go!

Connect motor and power cables, turn the control knob, and watch the motor speed change.

RoHS compliant
The VLT® Micro Drive does not contain lead, cadmium, hexavalent chrome, mercury, *or flame retardant PBB and PBDE.*

INVERTER - TECHNICAL & DRAWING DETAILS

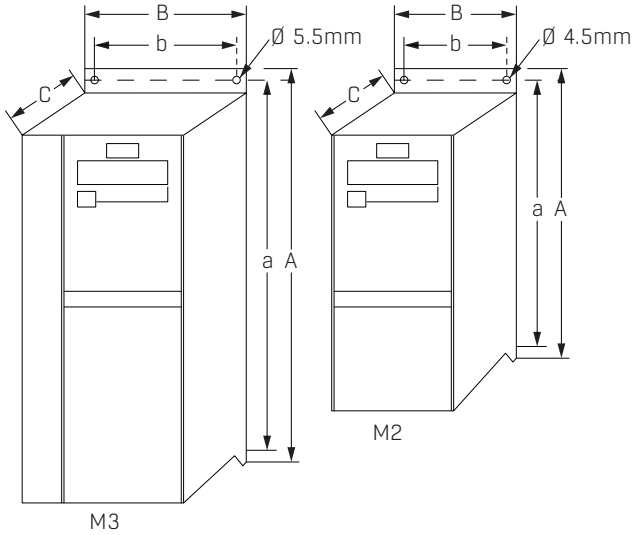

Inverter Model	Enc.	Ph.	V	Amps	kW	Power [kW]	Height [mm]	Width [mm]		Depth [1] [mm]	Max. Weight
						1x200-240 V	A (incl. conversion kit)	B	b	C	kg
6.8	M2	1-3	200-240V	6.8	1.5	1.5	245.6	78	59	144	1.6
9.6	M3	1-3	200-240V	9.6	2.2	2.2	297.5	95	69	210	3

All dimension in mm * For LCP with potentiometer add 7.6mm

MAXFAN COMPAC

WIRING DIAGRAM - CD3042 (FAN AND INVERTER)

INCOMING MOTOR LEADS TO MATCH FAN TERMINAL BLOCK LETTERING

TO REVERSE ROTATION SWAP ANY 2 OF U, V OR W INCOMING LEADS TO THE FAN TERMINAL BLOCK

*CONNECTION L2 OF MAINS IS BLANKED OFF (NOT TO BE USED)

THIS DIAGRAM MUST BE USED IN CONJUCTION WITH THE DANFOSS VLT MICRO DRIVE QUICK GUIDE

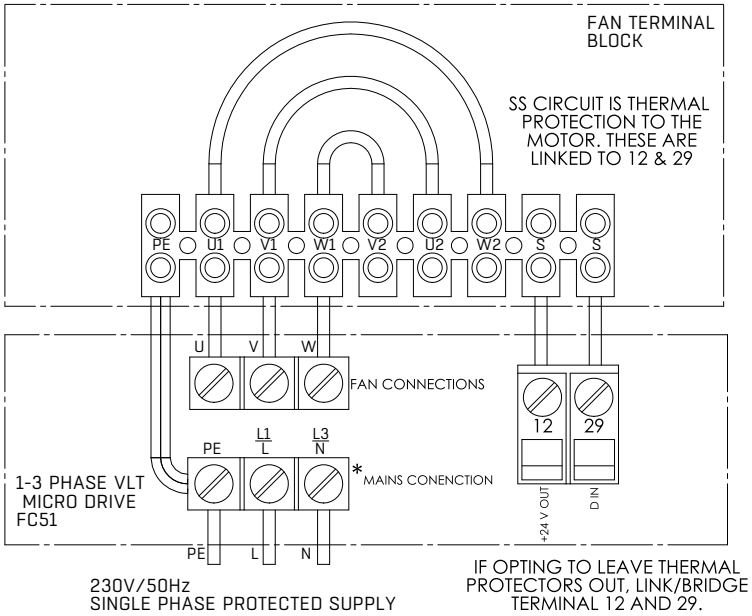

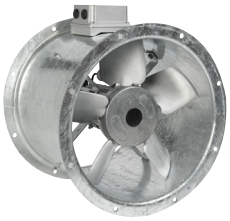

INTRODUCING
THE WOODS RANGE

- Over 100 years of experience in ventilation
- From the name you can trust
- Providing high quality products
- State of the art manufacturing facilities
- Extensive range of products
- Wide stock available for next day delivery
- British design and manufacture

Woods
A Fläkt Woods Brand

THE **NEW** JMv
THE NEXT GENERATION OF KITCHEN CANOPY FANS

- Lowering energy costs
- Robust design & ridged construction
- World class leading air flow & pressure
- ErP Compliant
- Quick Installation

GAIN THE AERODYNAMIC ADVANTAGE AND SAVE UP TO 24% ON ENERGY COSTS

THE **WOODS** RANGE FOR *COMPLETE*
VENTILATION SOLUTIONS

JMv Aerofoil

MaXfan²

JM Aerofoil

HT JM Aerofoil

JM Bifurcated

Series 33

Plate Fans

Cased & Plate Axial Accessories

Tube Fans

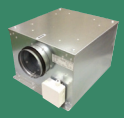
Sabina EC Box Fans

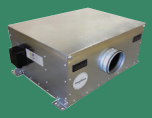
Daisho AC Box Fans

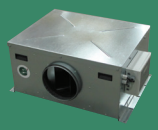
Daisho EC Box Fans

Estoc

Estoc Targe

Estoc EC

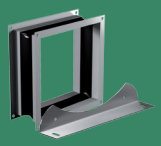
Tube & Box Accessories

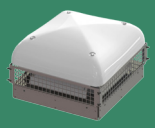
Roof Units Horizontal

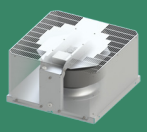
Roof Units Vertical

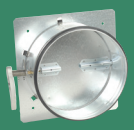
Fire Dampers ETPR

Iris Dampers

Fire Valves KSOF

Valves Supply KE

Valves Extract KK

Valves Extract VEFS

Nozzles DK & DR

Louvres/Cowls EYMA and DYMA

External Louvres USAV

Controllers

Many products are available from our UK Distributors on next day delivery, if ordered by 4pm. Please call to confirm availability on 01206 222 555.

FläktWoods

MaXfan Compac -GB-2016.05.01 © Copyright 2016 Fläkt Woods Limited

WE BRING **BETTER AIR**™ TO LIFE

Fläkt Woods' new Woods range offers over 100 years of experience in ventilation within the UK. The Woods brand formerly Woods of Colchester is one of the most if not THE most recognised name within the UK and the world with regard to ventilation. Since our formation in 1909 we have been a pioneer in ventilation and are a name you can trust and rely on.

Within our Woods range you can buy quality products manufactured at our state of the art manufacturing facilities in Colchester and around the world. Choose from an extensive range of products that are stocked and available next day (if ordered by 4pm) and speak to an expert team that will work around the clock to assist you.

Email

woodsuk@flaktwoods.com

Website

www.flaktwoods.co.uk/woods

Twitter

@Woods_Fans_UK

» To learn more about our offering and get in contact with your nearest sales representative please visit **www.flaktwoods.co.uk/woods**

AIR MOVEMENT - FANS CENTRE OF EXCELLENCE

Axial Way, Colchester, Essex. CO4 5ZD Tel: +44 (0)1206 222555

Woods
A Fläkt Woods Brand

Click on a tab to go
directly to that section

Britstream...

Self selection hoods by Britannia

Beautifully efficient kitchen ventilation:

Consistently high quality manufacture - to ISO 9001:2008 | Super efficient grease removal
Environmental design considerations | Custom made quality - at production-run prices

Britannia
kitchen ventilation

Forward

About Us
Range
Products
One
CaptureStream
Econex
Dish Wash
Accesories
Nomeclature
Ordering

About Britannia...

Britannia has been servicing the commercial kitchen ventilation market since 1995. Our portfolio contains a long, long list of fully satisfied customers & end-users; a legacy which provides us with a reputation that is second to none. From the largest to the smallest of projects, no effort is spared in finding the right solution to your kitchen ventilation problem.

Since its inception, Britannia has built its reputation upon a team of the industry's most experienced people, with a combined knowledge far surpassing that of our competitors. It is this intimate understanding of the product, the industry & our focus on customer service, which has seen us grow into the UK's market leading supplier of Commercial & Institutional Kitchen Hoods.

Our ethos is simple: We provide a range of products of the highest quality, at very affordable prices, whilst being mindful of the impact their manufacture & use has upon the environment. These key drivers are then solidly backed up by a level of service from our sales & technical teams, which ensures the correct selection & sizing for any given situation.

To advance this service yet further, as well as to facilitate greater control & understanding for our customers, we have developed the range of Britstream Hoods together with this product catalogue to help your selection process. With Britstream, we have put even more control in your hands, without losing any of the back-up & service you have always enjoyed from us and at even more competitive prices!

All Britannia products & services are quality controlled to ISO 9001:2008 under BRE Global surveillance.

All Britannia hoods are manufactured to comply with or exceed the requirements of DW172 & BS 6173.

Britannia is a full member of the Building & Engineering Services Association (formerly the Heating & Ventilation Contractor's Association).

Britannia is B M Trada - compliance certified.

Britannia is CHAS (Contractor Health & Safety Assessment Scheme) accredited.

Britannia is registered with Constructionline.

Britannia is a member of the Coventry Chamber of Commerce.

Britannia is a member of the Confederation of Construction Specialists.

Britannia has the "CodeMark" certificate of conformity confirming compliance with the Building Code of Australia (Issued by SAI Global)

2 Year Warranty on all Britstream products

For more information about Britannia, the product range and full literature with case histories, please visit our website:
www.kitchen-ventilation.co.uk

The Britstream range

The Britstream range of hoods has been developed after years of "in the field" research and development of kitchen hoods. Apart from this real-world in-put, we have extensively tested & retested products at our own facility in Leamington Spa as well as sponsoring many external test procedures on various components. The result of all this work is a hood system based around a group of modularised components which can be configured in multiple ways to create, what to all intents and purposes is a bespoke product. All parts have been designed to achieve a predetermined performance but are specifically not over-engineered. The combination of these properties provides a consistently high quality product, with great flexibility of application and at extremely competitive prices.

- Aesthetics are a priority during design, so all Britstream products look better, cleaner, brighter & proportionally correct for the environment.
- Functional efficiency is paramount and our product range incorporates innovative concepts which help reduce onward running costs in a myriad of ways.
- The range has been carefully designed to provide integral rigidity and to be self supporting - even when disassembled for transportation, so reducing the risks of damage in-transit.
- Only the finest materials, with consistent finish are used in the manufacture process. These are selected & utilised to reflect our concerns for the environment.
- Component sizing has been carefully considered to minimise risk to operatives when lifting, handling & installing.
- Reinforced fixing points have been strategically positioned to minimise site installation times.
- Panels are designed to be rigid so as to prevent drumming.
- Hidden fixings are utilised throughout.

Grease filtration

All Britstream hoods are equipped with Superstream grease filters as standard. Possibly the single-most important aspect of any kitchen ventilation hood, is the grease filtration; poor filtration drastically increases fire risk & maintenance requirements. For this reason, all Britstream canopies utilise our own highly developed ranges of either Superstream or Ultrastream grease filter panels. These have been tested in Germany to VDI 2052-1 and returned exceptional results at all particle sizes (up to 100% at 5.6 microns) but especially at smaller particle sizes (up to 70% at 3.5 microns) where most grease carry-over is caused and where most other filters fail.

Lighting

We have developed the "Britlux" range of light fittings which encompass everything that is important to modern kitchen installations; stylish, flush-fitting, low-energy, highfrequency, white-light, T5 lamps & ballasts. Each twin fitting has a hinged, sealed, toughened stippled-glass diffuser with drop down reflector and lamp array for ease of replacement, maintenance and for access above the canopy during installation. All lights are prewired to a junction box on the canopy and multiple lights are connected using prewired bi-pin moulded plugs to facilitate easy build-up after delivery. All lights are 240V 50Hz and lamp wattages are listed in the catalogue against the hood of your choice.

Supply-air Diffusers

Supply-air is typically delivered through the front, outward facing valance of the hood. We have developed a recessed, perforated diffuser panel arrangement with integral filtration to aid air distribution across the full area of the panel. The panels are then tastefully mounted within the front valance and trimmed above and below by a slim bevelled edge formed from the valance itself. Each panel is easily removed for maintenance and replacement and to gain access during the installation process.

Spot Cooling

For all supply-air applications as standard, fully adjustable spot cooling is incorporated for operator comfort. This directional air is delivered via smart, matt-black, ABS-moulded terminals in the lower front edge of the hood. Each terminal is easily removed for maintenance & replacement.

Materials

Hood assemblies are manufactured from type 304 stainless steel. All visible surfaces are fine grain satin polished to meet food hygiene standards. By special agreement, we can manufacture from other stainless steel sheet materials. Plenum ceilings are manufactured from zinc coated mild steel unless specified to the contrary.

Products

Click on a product below to go directly to that section:

One Pages 05-12

Traditional extract only & supply-air hoods; available in four configurations with standard width or extra wide (for use over ovens).

OE	Extract only - Standard depth
OER	Extract only - Reduced depth
OS2	Extract with front Supply & Spot cooling (2)
OS2R	Extract with front Supply & Spot cooling (2) - Reduced depth

Capturestream Pages 13-20

Airstream-induced capture hoods; available in four configurations with standard width or extra wide (for use over ovens).

CS1	Extract with induction Supply (1)
CS3	Extract with front Supply, Spot cooling & induction Supply (3)
CS1R	Extract with induction Supply (1) - Reduced depth
CS3R	Extract with front Supply, Spot cooling & induction Supply (3) - Reduced depth

Econex Pages 21-28

Super-efficient, low air-movement, ergonomic, environmentally friendly & available in four configurations with standard width, extra wide (for use over ovens) and super wide (for single sided island arrangements).

EF	Extract only - Front mounted
EFB	Extract only - Front & Back mounted
EFS2	Extract - Front mounted with front Supply & Spot cooling (2)
EFBS2	Extract - Front & Back mounted with front Supply & Spot cooling (2)

Dish Wash Page 29

Efficient capture & management of moisture loaded environments in a single, specialist configuration for all typical wash-up arrangements.

DWE	Dish Wash Extract

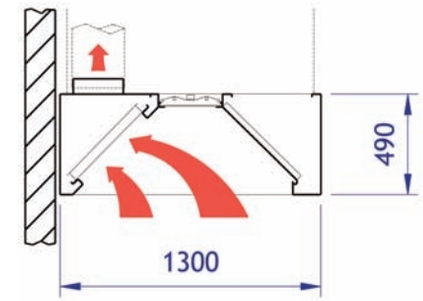

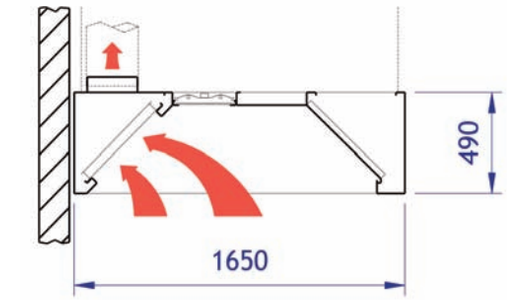

One OE

Extract only - standard depth

Length (mm)	Max. Extract Volume[2] (l/s)	Light Fittings	Extract Spigots[1] (Qty)	Extract Spigot Dimensions (mm)	Max. Supply Volume (l/s)	Supply Spigots[1] (Qty)	Supply Spigot Dimensions* (mm)	Weight (Kg)
1200	660	1 x 21W Twin Lamp	One	400 x 300	0	None	N/A	80
1375	660	1 x 21W Twin Lamp	One	400 x 300	0	None	N/A	90
1550	880	1 x 28W Twin Lamp	One	500 x 300	0	None	N/A	95
1725	880	1 x 28W Twin Lamp	One	500 x 300	0	None	N/A	105
1900	1100	1 x 35W Twin Lamp	One	600 x 300	0	None	N/A	110
2075	1100	1 x 35W Twin Lamp	One	600 x 300	0	None	N/A	120
2250	1320	1 x 35W Twin Lamp	One	800 x 300	0	None	N/A	125
2425	1320	1 x 35W Twin Lamp	One	800 x 300	0	None	N/A	135
2650	1540	1 x 21W & 1 x 28W Twin Lamp	Two	400 x 300	0	None	N/A	155
2825	1540	1 x 21W & 1 x 28W Twin Lamp	Two	400 x 300	0	None	N/A	165
3000	1760	2 x 28W Twin Lamp	Two	500 x 300	0	None	N/A	170
3175	1760	2 x 28W Twin Lamp	Two	500 x 300	0	None	N/A	180
3350	1980	1 x 28W & 1 x 35W Twin Lamp	Two	600 x 300	0	None	N/A	185
3525	1980	1 x 28W & 1 x 38W Twin Lamp	Two	600 x 300	0	None	N/A	195
3700	2200	2 x 35W Twin Lamp	Two	600 x 300	0	None	N/A	205
3875	2200	2 x 35W Twin Lamp	Two	600 x 300	0	None	N/A	215
4050	2420	2 x 35W Twin Lamp	Two	700 x 300	0	None	N/A	220
4225	2420	2 x 35W Twin Lamp	Two	700 x 300	0	None	N/A	230
4400	2640	2 x 35W Twin Lamp	Two	700 x 300	0	None	N/A	235
4575	2640	2 x 35W Twin Lamp	Two	700 x 300	0	None	N/A	245
4800	2860	2 x 28W & 1 x 35W Twin Lamp	Three	600 x 300	0	None	N/A	260
4975	2860	2 x 28W & 1 x 35W Twin Lamp	Three	600 x 300	0	None	N/A	280
5150	3080	1 x 24W & 2 x 35W Twin Lamp	Three	600 x 300	0	None	N/A	280
5325	3080	1 x 28W & 2 x 35W Twin Lamp	Three	600 x 300	0	None	N/A	300
5500	3300	3 x 35W Twin Lamp	Three	600 x 300	0	None	N/A	295
5675	3300	3 x 35W Twin Lamp	Three	600 x 300	0	None	N/A	315
5850	3520	3 x 35W Twin Lamp	Three	700 x 300	0	None	N/A	310
6025	3520	3 x 35W Twin Lamp	Three	700 x 300	0	None	N/A	330
6200	3740	3 x 35W Twin Lamp	Three	700 x 300	0	None	N/A	325
6375	3740	3 x 35W Twin Lamp	Three	700 x 300	0	None	N/A	345
6550	3960	3 x 35W Twin Lamp	Three	800 x 300	0	None	N/A	340
6725	3960	3 x 35W Twin Lamp	Three	800 x 300	0	None	N/A	360

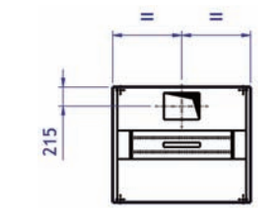

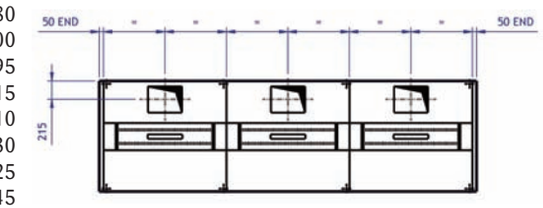

(1) Alternative dimensions / sizes are available upon request.
(2) Maximum Extract Volume base upon use of Superstream baffle type grease filter panels.

One OE

Wall and island hood configurations

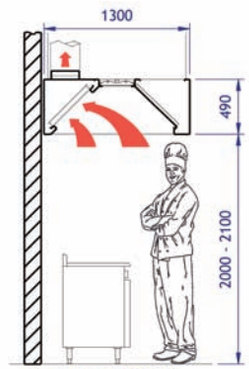

One/OE/1300SSW

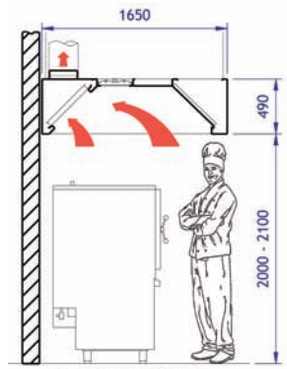

One/OE/1650SSW

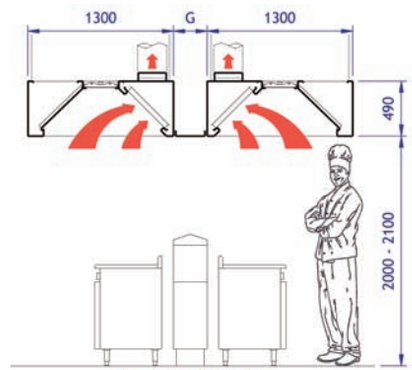

One/OE/DSI-X:G

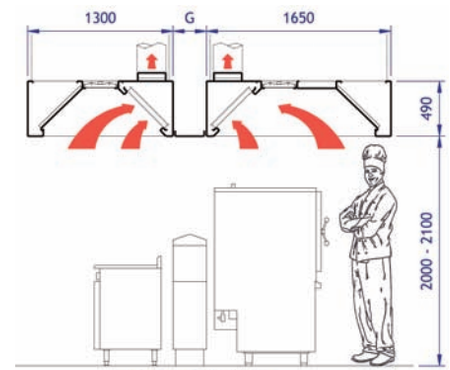

One/OE/DSI-Y:G

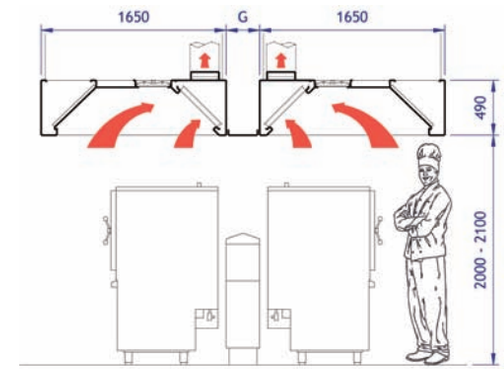

One/OE/DSI-Z:G

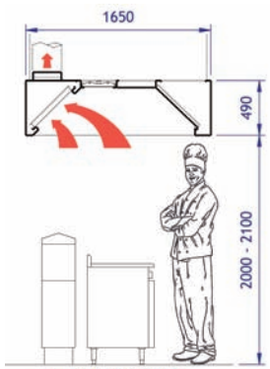

One/OE/1650SSI

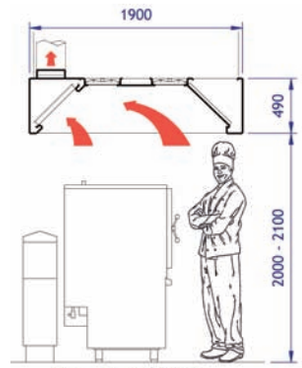

One/OE/1900SSI

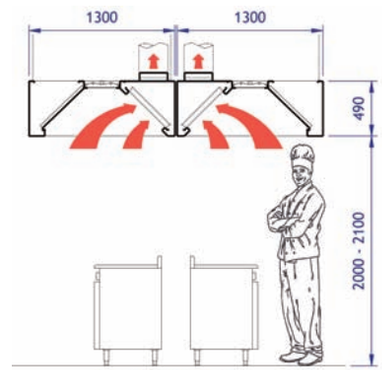

One/OE/DSI-X

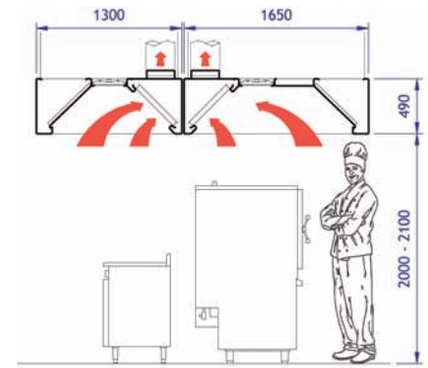

One/OE/DSI-Y

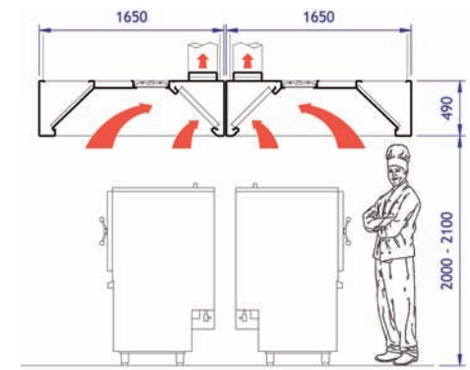

One/OE/DSI-Z

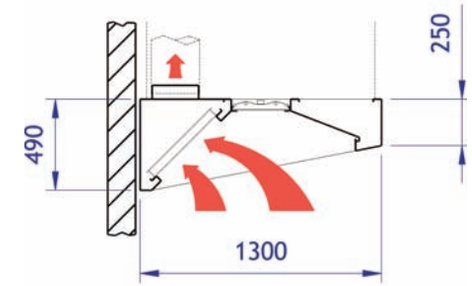

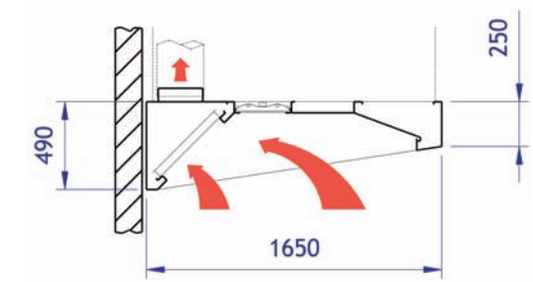

One OER

Extract only - reduced depth

Length (mm)	Max. Extract Volume[2] (l/s)	Light Fittings	Extract Spigots[1] (Qty)	Extract Spigot Dimensions (mm)	Max. Supply Volume (l/s)	Supply Spigots[1] (Qty)	Supply Spigot Dimensions* (mm)	Weight (Kg)
1200	660	1 x 21W Twin Lamp	One	400 x 300	0	None	N/A	80
1375	660	1 x 21W Twin Lamp	One	400 x 300	0	None	N/A	90
1550	880	1 x 28W Twin Lamp	One	500 x 300	0	None	N/A	95
1725	880	1 x 28W Twin Lamp	One	500 x 300	0	None	N/A	105
1900	1100	1 x 35W Twin Lamp	One	600 x 300	0	None	N/A	110
2075	1100	1 x 35W Twin Lamp	One	600 x 300	0	None	N/A	120
2250	1320	1 x 35W Twin Lamp	One	800 x 300	0	None	N/A	125
2425	1320	1 x 35W Twin Lamp	One	800 x 300	0	None	N/A	135
2650	1540	1 x 21W & 1 x 28W Twin Lamp	Two	400 x 300	0	None	N/A	155
2825	1540	1 x 21W & 1 x 28W Twin Lamp	Two	400 x 300	0	None	N/A	165
3000	1760	2 x 28W Twin Lamp	Two	500 x 300	0	None	N/A	170
3175	1760	2 x 28W Twin Lamp	Two	500 x 300	0	None	N/A	180
3350	1980	1 x 28W & 1 x 35W Twin Lamp	Two	600 x 300	0	None	N/A	185
3525	1980	1 x 28W & 1 x 38W Twin Lamp	Two	600 x 300	0	None	N/A	195
3700	2200	2 x 35W Twin Lamp	Two	600 x 300	0	None	N/A	205
3875	2200	2 x 35W Twin Lamp	Two	600 x 300	0	None	N/A	215
4050	2420	2 x 35W Twin Lamp	Two	700 x 300	0	None	N/A	220
4225	2420	2 x 35W Twin Lamp	Two	700 x 300	0	None	N/A	230
4400	2640	2 x 35W Twin Lamp	Two	700 x 300	0	None	N/A	235
4575	2640	2 x 35W Twin Lamp	Two	700 x 300	0	None	N/A	245
4800	2860	2 x 28W & 1 x 35W Twin Lamp	Three	600 x 300	0	None	N/A	260
4975	2860	2 x 28W & 1 x 35W Twin Lamp	Three	600 x 300	0	None	N/A	280
5150	3080	1 x 24W & 2 x 35W Twin Lamp	Three	600 x 300	0	None	N/A	280
5325	3080	1 x 28W & 2 x 35W Twin Lamp	Three	600 x 300	0	None	N/A	300
5500	3300	3 x 35W Twin Lamp	Three	600 x 300	0	None	N/A	295
5675	3300	3 x 35W Twin Lamp	Three	600 x 300	0	None	N/A	315
5850	3520	3 x 35W Twin Lamp	Three	700 x 300	0	None	N/A	310
6025	3520	3 x 35W Twin Lamp	Three	700 x 300	0	None	N/A	330
6200	3740	3 x 35W Twin Lamp	Three	700 x 300	0	None	N/A	325
6375	3740	3 x 35W Twin Lamp	Three	700 x 300	0	None	N/A	345
6550	3960	3 x 35W Twin Lamp	Three	800 x 300	0	None	N/A	340
6725	3960	3 x 35W Twin Lamp	Three	800 x 300	0	None	N/A	360

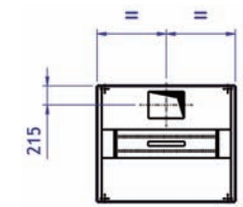

(1) Alternative dimensions / sizes are available upon request.
(2) Maximum Extract Volume base upon use of Superstream baffle type grease filter panels.

One OER

Wall and island hood configurations

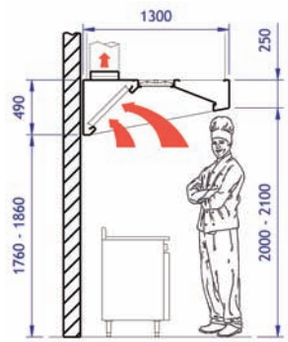

One/OER/1300SSW

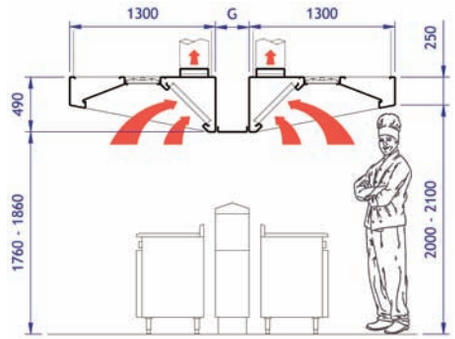

One/OER/DSI-X:G

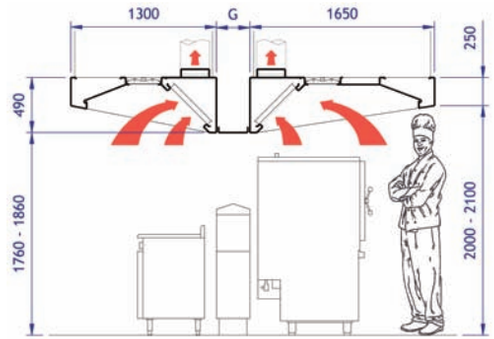

One/OER/DSI-Y:G

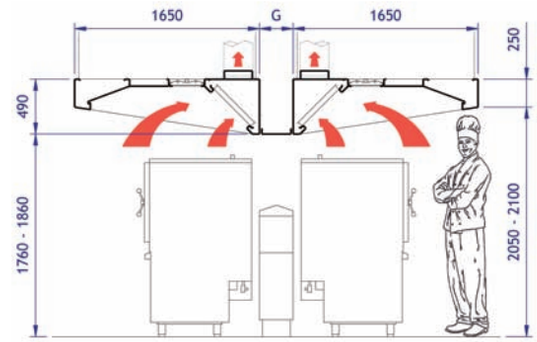

One/OER/DSI-Z:G

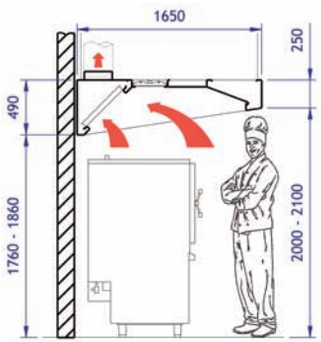

One/OER/1650SSW

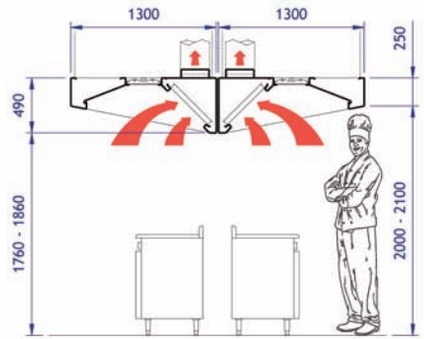

One/OER/DSI-X

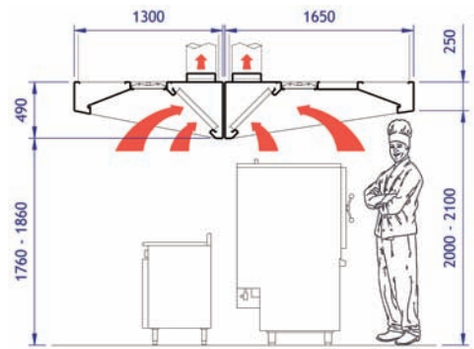

One/OER/DSI-Y

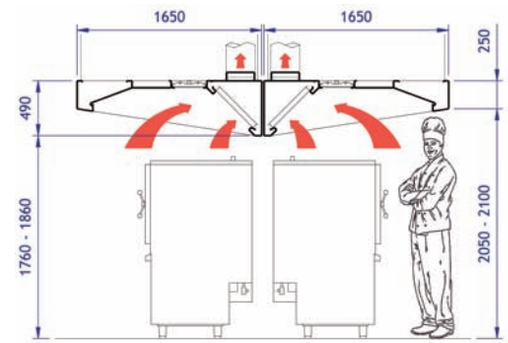

One/OER/DSI-Z