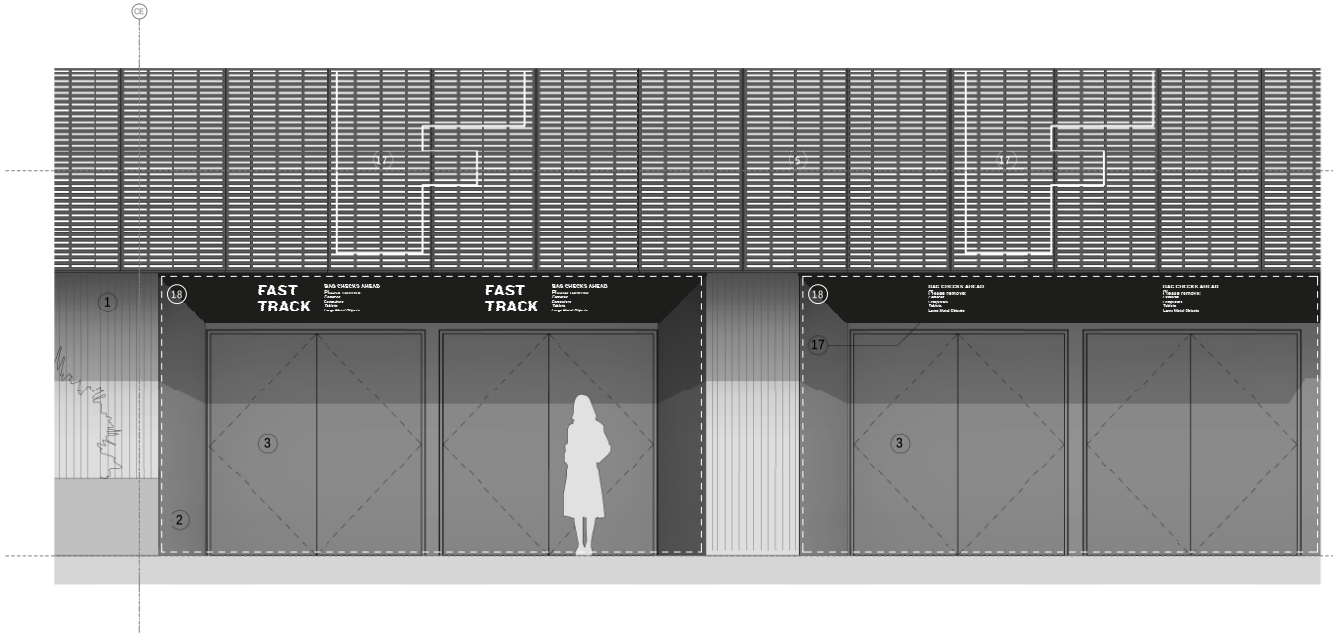

3 ELEVATION - TYPICAL ENTRANCE DOORS
1 : 50

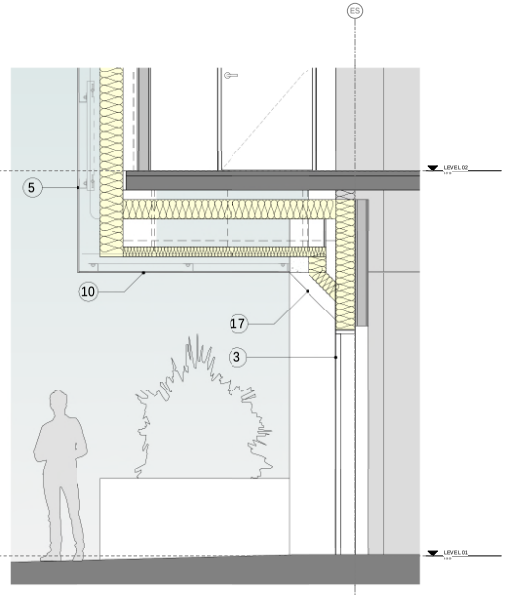

2 SECTION - TYPICAL ENTRANCE DOORS
1 : 50

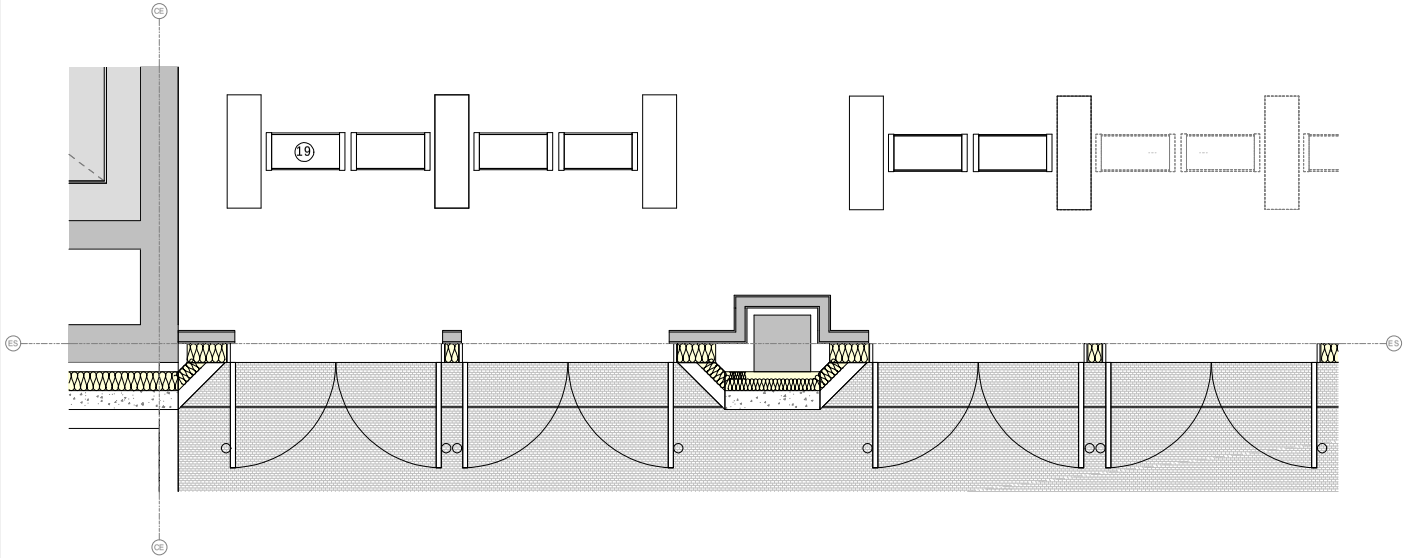

1 PLAN - TYPICAL ENTRANCE DOORS
1 : 50

REVISIONS

REV	DATE	DESCRIPTION
00	14.02.2020	PLANNING

KEYPLAN

KEY

1. PRECAST CONCRETE FACADE PANEL - RIBBED
2. PRECAST CONCRETE DOOR PORTAL
3. METAL DOORSET - FINISH TO MATCH CONRETE
4. BOX OFFICE WINDOWS
5. BLACK PERFORATED METAL PANEL
6. BLACK PERFORATED METAL PANEL WITH LED BEHIND
7. COMPOSITE FACADE CLADDING PANEL
8. COMPOSITE SOFFIT CLADDING PANEL
9. BLACK PERFORATED METAL SOFFIT PANEL
10. MIRRORED SOFFIT PANEL
11. GREEN SCREEN
12. UP AND OVER DOOR - FINISH TO MATCH CONCRETE
13. BLACK FLAT ROOF
14. OFFICE WINDOW BEHIND PERFORATED CLADDING
15. BOX OFFICE RIBBON BOARD
16. PRECAST CONCRETE FACADE PANEL
17. WAYFINDING INFORMATION
18. ZONE FOR NAMING RIGHTS SIGNAGE
19. SECURITY ARCHES

THIS DRAWING IS ONLY TO SCALE IF IT IS REPRODUCED AT THE CORRECT PAPER SIZE

1:20@A0

ALL INTERNAL LAYOUTS AND USES ARE SHOWN FOR ILLUSTRATIVE PORPOSES ONLY AND ARE NOT FOR DETERMINATION

CLIENT

OVG International

© COPYRIGHT. ALL RIGHTS RESERVED

THIS WORK IS COPYRIGHT AND CANNOT BE REPRODUCED OR COPIED IN ANY FORM OR BY ANY OTHER MEANS (GRAPHIC, ELECTRONIC OR MECHANICAL, INCLUDING PHOTOCOPYING) WITHOUT THE WRITTEN PERMISSION OF THE COPYRIGHT OWNER. ANY PERSON DOING ANY OF THE ABOVE TO THE WORK MAY BE LIABLE TO CIVIL PROCEEDINGS AND MAY ALSO BE GUILTY OF A CRIMINAL OFFENCE. THE RIGHT OF THE REPRODUCTION OF THE WORK IN ANY FORM IS NOT GRANTED TO THE TERMS OF THIS REPRODUCTION AND LICENCE BETWEEN POPULOUS AND THE INSTRUCTING PARTY.

USE FIGURED DIMENSIONS IN PREFERENCE TO SCALED. CHECK ALL DIMENSIONS ON SITE BEFORE MANUFACTURE OR SETTING OUT.

ARCHITECT

POPULOUS

14 BLADE STCOURT | 3 BOOMB ARD ROAD | LONDON | SW1E 5NJ | UNITED KINGDOM
TELEPHONE +44 (0)20 8974 7866 FACSIMILE +44 (0)20 8974 7470

ALL PRODUCTS IN A RETAIL RETAIL PROPERTY IN RIGHTS RESERVED © POPULOUS 2 008

PROJECT NAME

OVG MANCHESTER

DRAWING TITLE

FACADE - TYPICAL ENTRANCE DOORS

STATUS	PROJECT No
PLANNING	4933

DATE	SCALE	SIZE
14.02.2020	As indicated	A0

DRAWN	CHECKED	APPROVED
GK	PG	DS

PROJECT	ORIGIN	ZONE	LEVEL	TYPE	ROLE	DRAWING	REV
BRA-	POP-	XX-	ZZ-	DR-	A-	0631	00