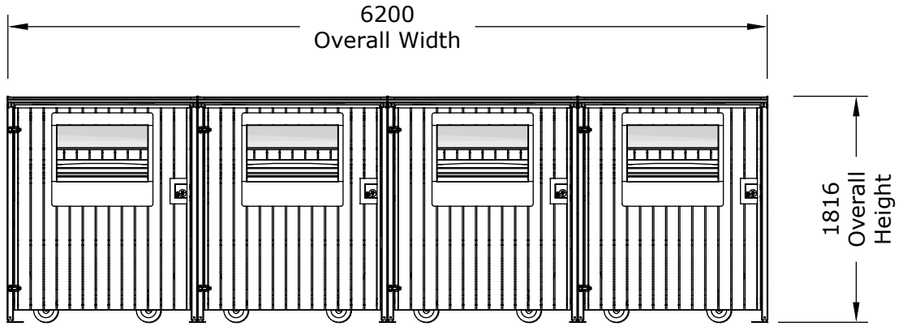

Front Elevation

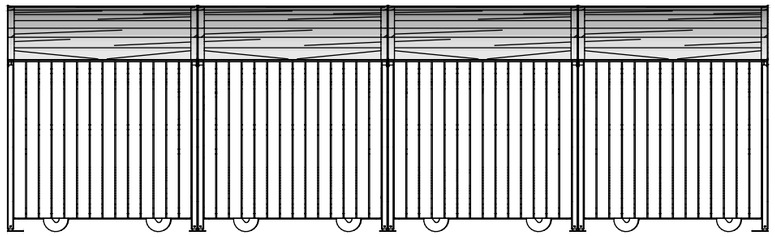

Rear Elevation

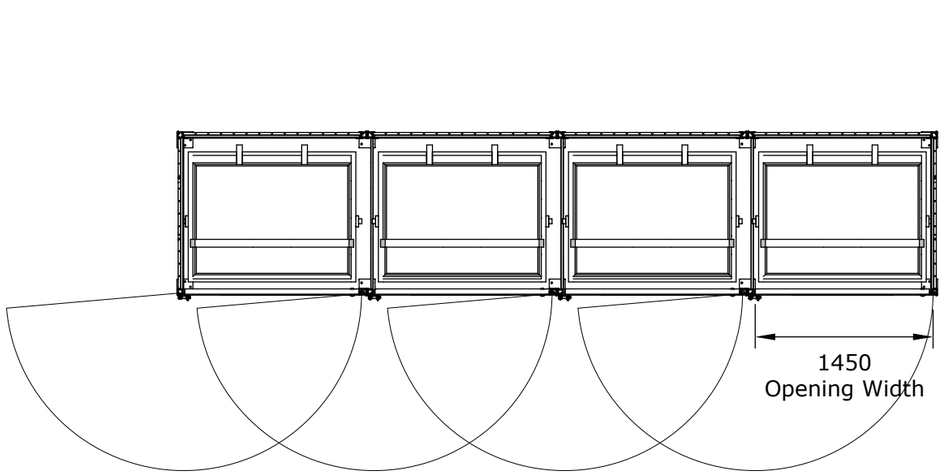

Plan View

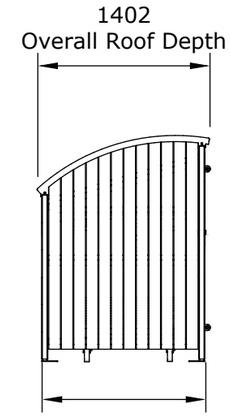

Left Elevation

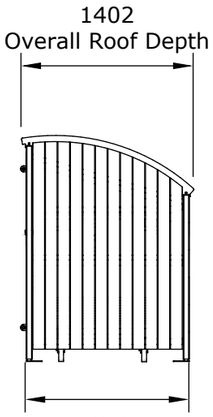

Right Elevation

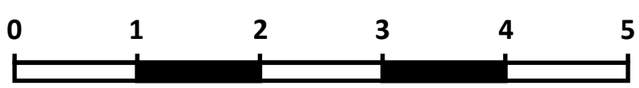

Scale 1:50 @ A3, Metres

Drawn By: SRC
Scale: 1:50 @ A3

Drawing Type: Information

MODEL: PBM-4t Waste Stream Enclsoure

metroSTOR®
outdoor storage systems

DWG NO. PBM-4t-Information

REVISION

SHEET 1 OF 1