europanel

eurobond

contemporary external wall panel system

contents

3 eurobond laminates – about us

6 europanel introduction

8 F5 and F5 extra

10 S5 and S5 extra

12 G-Series

14 V-groove and europanel NRG panel

15 integrated glazing and doors

16 structural performance

17 fire performance

18 sustainability and environmental performance

19 thermal and acoustic performance

20 weights, dimensions and tolerances

21 panel profiles

22 standard details
europanel horizontally laid

24 standard details G-series
europanel horizontally laid

26 standard details S5/F5
europanel horizontally laid

27 omegas and extrusions

28 standard details
europanel vertically laid

30 standard details F5/S5
europanel vertically laid

31 standard details G-series
europanel vertically laid

34 standard details
europanel with windows

35 ancillaries fasteners

36 factory mitred corners

37 technical service and support

38 Colorcoat® by Tata Steel

If you would like any additional information on any of the topics highlighted in this technical manual or project specific technical information not included then please contact us and we would be happy to discuss your requirements.

Call +44 (0) 29 20 77 66 77
Fax +44 (0) 29 20 36 91 61
Email technical@eurobond.co.uk

www.eurobond.co.uk

eurobond laminates
about us

Eurobond is the leading UK manufacturer of non-combustible cored internal and external wall and ceiling composite panels. The stone wool core offers a low environmental impact, robustness, tested fire resistance and minimum smoke in the event of a fire. The panel systems are designed to the highest standards and manufactured to consistent high quality to minimise risk through tested performance, proven installation methods and end of life disposal.

Eurobond offers a wide range of stone wool cored, architecturally flat composite wall and ceiling panels for both internal and external use.

All panel systems provided are tested and approved to relevant Loss Prevention standard LPS 1181, LPS 1208 and Underwriters Laboratories standard ASTM E119-12.

The company continues to invest in product development, testing and manufacturing technology and operates two of the most technologically advanced panel production lines in Europe, producing consistent, high quality products to exacting tolerances. There is also a comprehensive technical advisory service to assist in the specification, detailing and installation of panel systems.

Hartlepool
Innovation Centre

our reputation h
on quality over th

Prestatyn Retail Park,
North Wales

has been built
he last 30 years

Cardiff City
Stadium Extension

europanel introduction

Europanel offers a range of high quality, insulated metal panel systems that deliver clean, smooth and aesthetically appealing solutions ideally suited to contemporary buildings. It is an ideal solution for façades with high requirements for sustainability, fire resistance, acoustics and energy efficiency.

The system has a hidden joint detail which conceals fasteners from view and it can be seamlessly integrated with windows, doors, solar shading and other design requirements.

Europanel is available in five pre-engineered systems that can be installed both horizontally and vertically. Europanel neatly combines design freedom with exceptional functional performance and unique modular flexibility of 1mm increments between 300mm and 1200mm wide.

Designed as a single engineered component, Europanel is both quick and cost effective to install, and is ideally suited for new build and refurbishment work across: commercial office, health, education, retail, sport and leisure, and major infrastructure projects.

Loughborough Primary School,
Brixton

David Lloyd,
Worcester

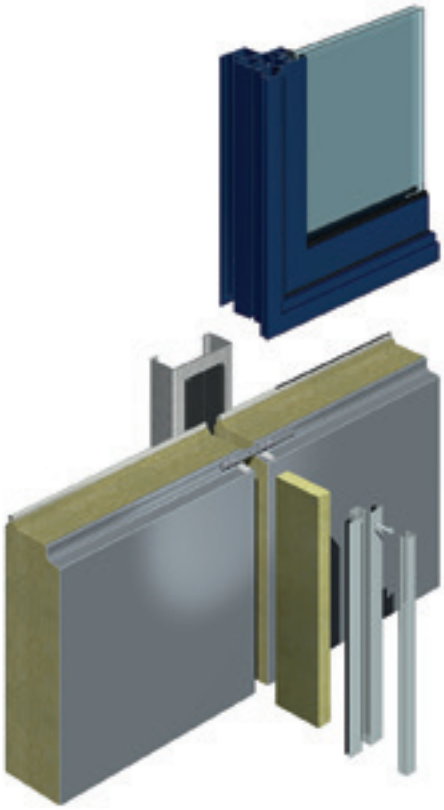

All systems use a high density non-combustible stone wool core that provides 'built in' passive fire resistance, which meets both life safety and property fire protection requirements. It also allows for enhanced structural and acoustic properties.

The stone wool core and panel joint design ensure 'class leading' thermal and air tightness performance to help reduce operational carbon and exceed the requirements of new Approved Document L 2013 and other UK guidance documents.

Design freedom is further enhanced by steel facings in an extensive palette of solid and metallic colours and finishes. This results in stylish building envelopes of the highest quality and appearance.

The five Europanel systems are available in both Colorcoat HPS200 Ultra® and Colorcoat Prisma® by Tata Steel. These are supported by an array of services, such as comprehensive guarantees, colour consultancy and technical support and guidance.

TATA STEEL

Rolls-Royce,
Yorkshire

Hartlepool
Innovation Centre

F5

Europanel F5, with an architecturally flat profile, is suitable for horizontal or vertical installation delivering fire performance for both insulation and integrity.

F5 extra

F5 Extra with an architecturally flat profile has a higher density non-combustible stone core compared to F5.

It offers up to 2 hours fire performance for both insulation and integrity combined with enhanced acoustic and structural spanning capabilities.

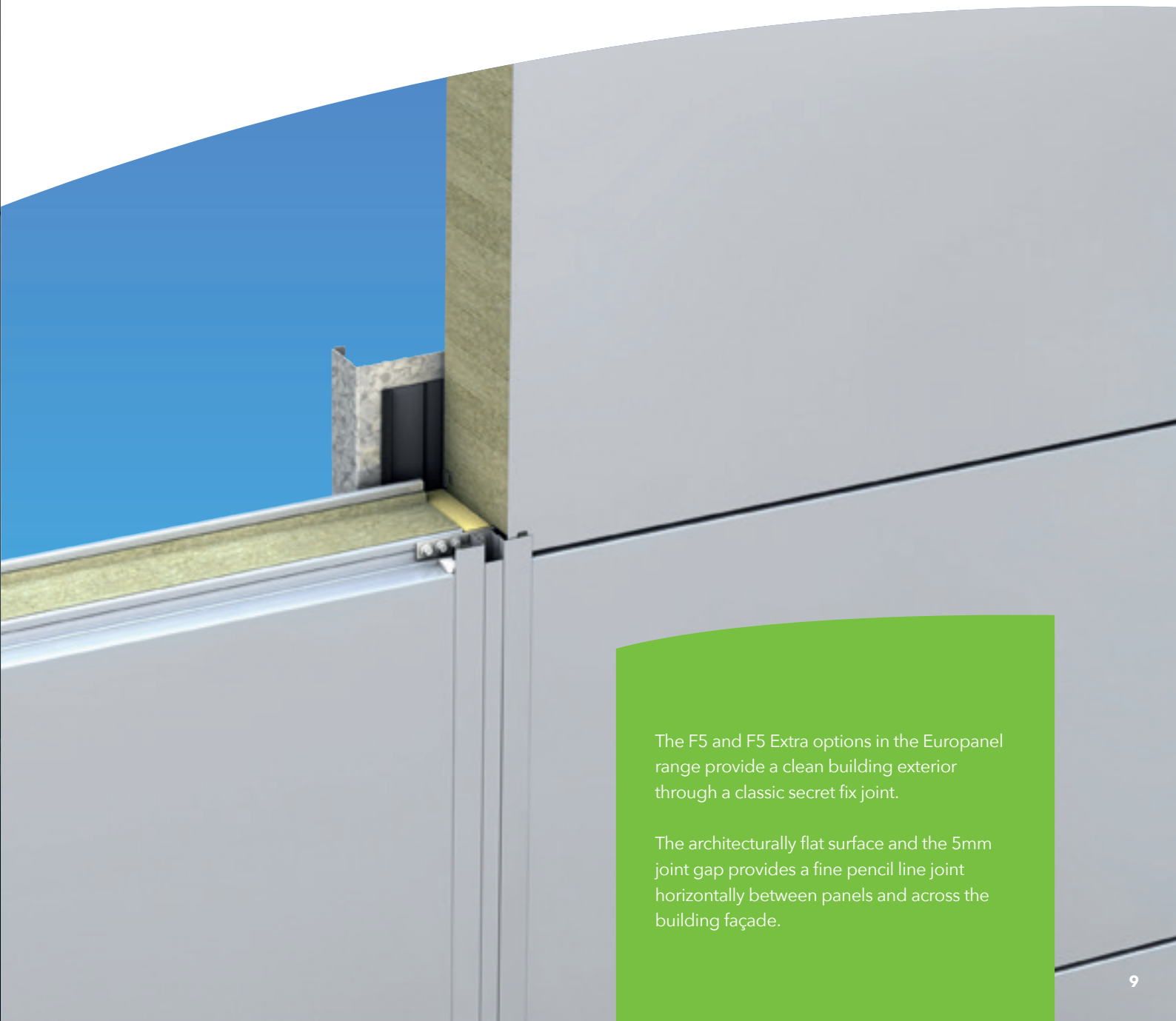

The F5 and F5 Extra options in the Europanel range provide a clean building exterior through a classic secret fix joint.

The architecturally flat surface and the 5mm joint gap provides a fine pencil line joint horizontally between panels and across the building façade.

Lok N Store,
Reading

S5

Europanel S5, with its satin line profile is suitable for horizontal or vertical applications and offers fire performance for both insulation and integrity.

S5 extra

S5 Extra with its satin line profile is manufactured with a higher density core than S5 and offers up to 2 hours fire performance for both insulation and integrity combined with enhanced acoustic and structural spanning capabilities.

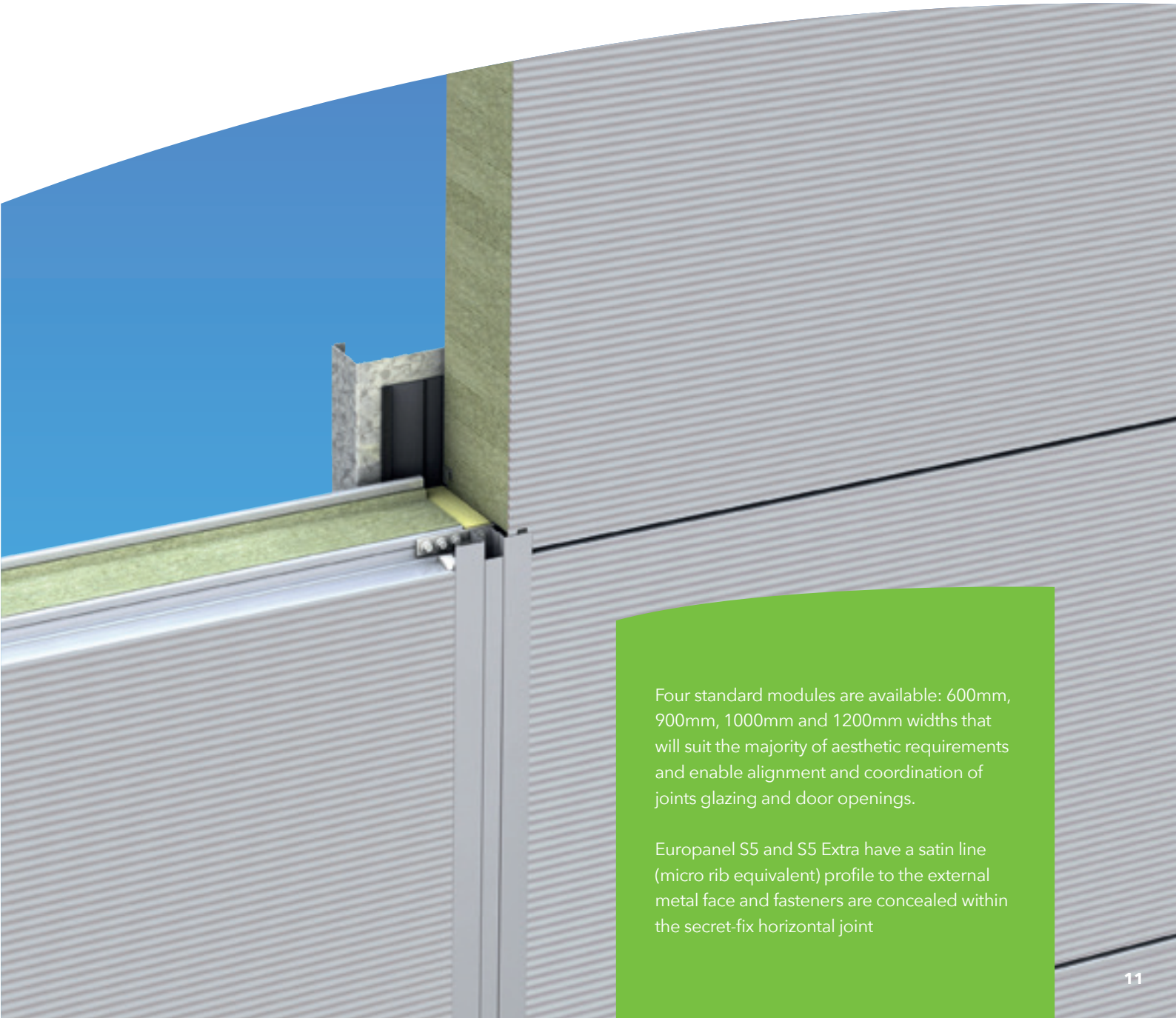

Four standard modules are available: 600mm, 900mm, 1000mm and 1200mm widths that will suit the majority of aesthetic requirements and enable alignment and coordination of joints glazing and door openings.

Europanel S5 and S5 Extra have a satin line (micro rib equivalent) profile to the external metal face and fasteners are concealed within the secret-fix horizontal joint

Costa,
Greater Manchester

G series

The vertical and horizontal cross panel jointing of Europanel G (Gasket) series creates the visual impression of a wider uniform frame around individual panels, similar to that of a bi-modular system. The horizontal joint houses an aluminium section, which is factory fitted to each panel.

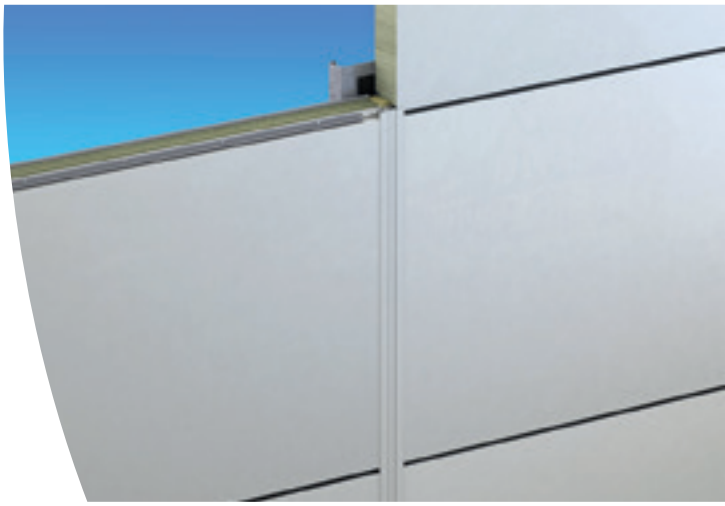

A high performance EPDM gasket is site installed and locates within the aluminium section to provide a positive location and retention of the gasket

The G series of configurations are available with 12mm (G12), 30mm (G30) and 50mm (G50) gaskets to give your building envelope a striking visual 'grid' effect with varying widths.

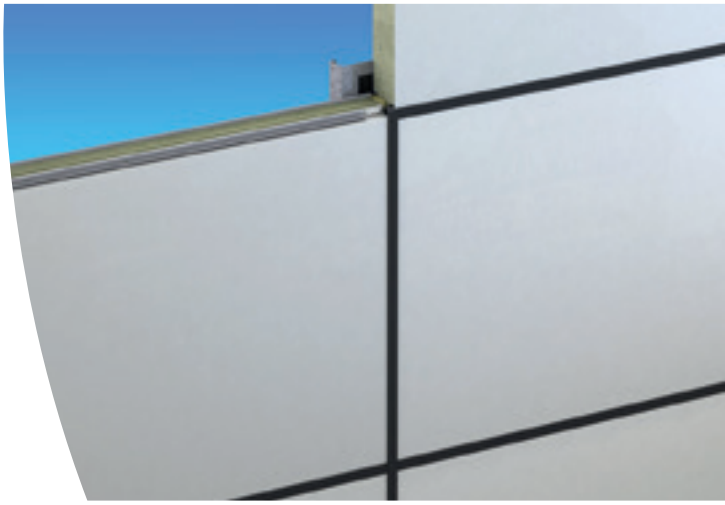

Design freedom is realised through the unique combination of 12mm, 30mm and 50mm wide expressed horizontal joints and modular flexibility between 600 and 1200mm in 1mm increments. Panel lengths of up to 12 metres and thicknesses between 75 and 240mm are also available.

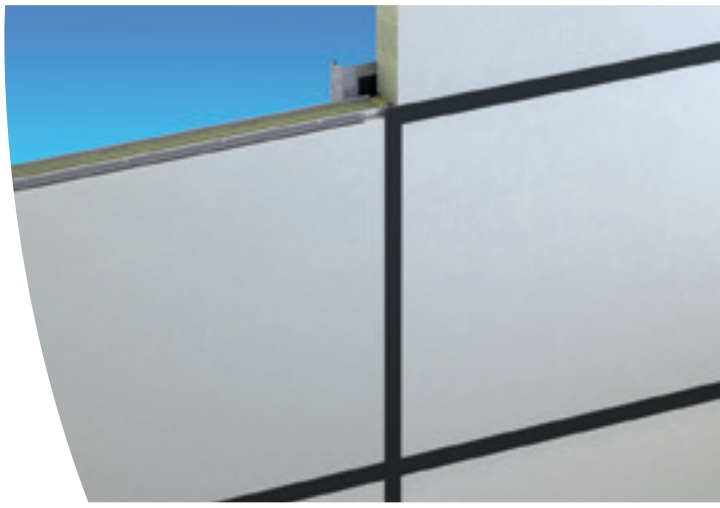

v-groove

The V-groove option features grooves engineered into its surface of the Europanel , thereby creating subtle shadow lines on the building's façade and an illusion of using smaller panel widths, but without the installation time constraints; It enables the designer to create the visual expression of multi module panels and still keep the performance and cost benefits of large panels. For any given module width of panel a designer can specify single or multiple grooves that simulate a panel joints.

The benefits of multi module design, with fewer panels and panel joints, help to provide a significant saving in both labour and material installation costs; as well as increasing overall air-tightness performance of the building wall envelope. Panels can have one central groove, two with equal pitch or specific asymmetric pitches.

The V-groove is available with panel system Europanel S5 and F5 and can be applied to the full range of panel thicknesses and finishes.

europanel NRG Panel

The NRG option is available across the europanel panel range. It uses a special Colorcoat® High Reflect by Tata Steel internal steel face that maximises daylight and reduces the requirement for artificial lighting. The result is lower light energy bills for the life of the building, a reduction in the CO_2 footprint and a positive contribution to material credits in a BREEAM assessment. The NRG option is available in a wide range of finishes that combine aesthetics, functionality and performance.

NRG option composite panels use Colorcoat® High Reflect – an innovative material designed with maximum reflectivity to reduce energy requirements, associated operational costs and CO_2 emissions. NRG is a passive energy saving product and the benefits are expected to last the life of the building in normal and unpolluted environments.

The new NRG panel option offers:

- ≥ 85% reflectance, reducing the amount of energy required to achieve the same level of lighting.
- Significantly reduces CO_2 emissions helping to achieve compliance with tightening regulations.
- Can improve daylight factor by 10%.
- Possible energy savings of up to 12% per annum.*

Adding the NRG option to any Eurobond composite panel will further enhance the product's market leading fire, acoustic, structural and environmental performance.

* Based on 4000m² building, daytime operation. Based on SBEM Calculation under NCM conditions for Part L compliance. [Payback for 24 hour operation is ≤ 1.5 years] Colorcoat High Reflect® used for wall and ceiling.

integrated glazing and doors

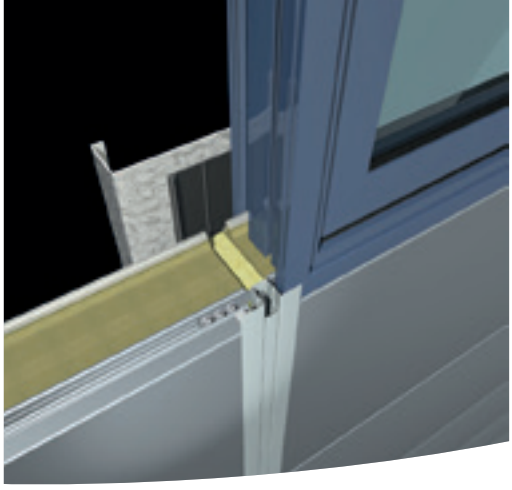

The Europanel system has been developed as a 'total wall' solution and is designed to be integrated into complex façades and easily accommodates components such as glazing, doors, sun shading and louvres.

Eurobond has worked closely with a number of leading suppliers of architectural aluminium systems, to develop a range of windows, doors and louvers which are fully integrated with the Europanel system. There is a full range of details backed up by testing to accepted industry standards to ensure weather and air tightness and durability.

The external frame of the window, door or louvre incorporates aluminium extrusions, which matches the functional appearance of the Europanel edge profile. This allows the components to be installed in exactly the same way as the panels, eliminating the need for flashings and additional mastic sealing, which in turn:

- Ensures a consistent installation standard
- Improves the aesthetic appearance
- Improves thermal performance
- Reduces air permeability
- Reduces installation time

Airbus,
Bristol

structural performance

Eurobond's panels offer exceptional spanning characteristics resulting from the composite action of the metal facings bonded to a high density structural stone wool core. Development and testing allows Eurobond panels to be used to span up to 12m*.

Using panels that can span up to 12m means that secondary steelwork can either be eliminated or significantly reduced allowing the following benefits:

- Cost savings for steelwork.
- Reduction in build programme.
- Cleaner, uncluttered internal appearance.

The only significant constraints on the length of the panel are handling considerations, wind pressure and suction.

Wind loads are dependent on the building location and dimensions. The calculation of the wind loads, as laid down in Eurocode 1 (EN 1991 1.4), is a complex and demanding procedure for which Eurobond offer an advisory service to techinically verify and model buildings and locations to calculate spanning capability.

*Dependant on project/ building environment span in excess of 12m is possible. Please contact Eurobond technical department for project specific information.

Please contact our technical department who will be happy to provide detailed span information based on your project needs.

Call +44 (0) 29 20 77 66 77
Fax +44 (0) 29 20 36 91 61
Email technical@eurobond.co.uk

www.eurobond.co.uk

fire performance

All Europanel composite panels offer high levels of fire resistance and have been tested and approved by the Loss Prevention Certification Board (LPCB) and Underwriters Laboratories (UL). The following table details the panel specifications and fire performance achieved.

Product	Panel thickness (mm)	Fire resistance (minutes)		Maximum unsupported length (m)	LPS 1181 Grade
		Insulation	Integrity	LPS 1208	
Europanel S5 (Satinline) F5 (Flat)	75	30	30	3.0	EXT-A30
	75	30	60	3.0	EXT-A30
	100	30	30	5.5	EXT-A30
	100	30	60	4.5	EXT-A30
	125	30	30	5.5	EXT-A30
	125	60	60	4.5	EXT-A60
	125	60	90	4.0	EXT-A60
	150	30	30	5.5	EXT-A30
	150	60	60	5.5	EXT-A60
	150	90	90	5.0	EXT-A60
	150	90	120	5.0	EXT-A90
	175	30	30	5.5	EXT-A30
	175	60	60	5.5	EXT-A60
	175	60	30	5.0	EXT-A60
	175	90	120	5.0	EXT-A90
	200	90	120	5.0	EXT-A90
	240	90	120	5.0	EXT-A90
Europanel S5 extra (Satinline) F5 extra (Flat) G12, G30, G50	75	30	30	3.0	EXT-A30
	75	60	60	3.0	EXT-A60
	100	30	30	7.5	EXT-A30
	100	60	60	6.0	EXT-A60
	125	30	30	7.5	EXT-A30
	125	60	60	6.0	EXT-A60
	125	90	90	5.5	EXT-A90
	150	30	30	7.5	EXT-A30
	150	60	60	7.5	EXT-A60
	150	90	90	7.5	EXT-A90
	150	120	120	7.5	EXT-A120
	175	30	30	7.5	EXT-A30
	175	60	60	7.5	EXT-A60
	175	90	90	7.5	EXT-A90
	175	120	120	7.5	EXT-A120
	200	30	30	7.5	EXT-A30
	200	60	60	7.5	EXT-A60
	200	90	90	7.5	EXT-A90
	200	120	120	7.5	EXT-A120
	240	120	120	7.5	EXT-A120

Non-Combustible Core

All panels have stone wool cores which are non- combustible as defined by the Building Regulations applicable to all parts of the United Kingdom and the Republic of Ireland. This includes materials classified as Class A1 in accordance with BS EN 13501-1: 2002 Fire classification of construction products and building elements – Part 1: Classification using test data from reaction to fire tests, when tested to BS EN 13501-1:2002.

Fire performance spans are subject to wind load verification.

All panels can be installed horizontally or vertically.

* joint stitched on both sides at 3m centres

** panel joint stitched on both sides at 300mm centres

*** 0.7mm steel faces to both sides

sustainability and environmental performance

Eurobond delivers on its brand promise of low environmental impact from raw material sourcing, efficient manufacturing and market leading product performance, minimum waste and a proven recycling option at the end of a building's life.

The Eurobond philosophy is one of continual improvement, striving to manufacture and deliver to customers the most environmentally responsible and sustainable products. Key to this is establishing, implementing and maintaining an Integrated Management System which complies with the requirements of ISO9001:2008, ISO14001:2004 and BES 6001.

Whilst sustainability and 'green' credentials have become more important considerations in recent years it is not always easy to validate the claims companies make about their performance and that of their products. Eurobond's aim is to make specifying the most sustainable products simpler and more transparent. To this end it has implemented BES 6001 Responsible Sourcing of Construction Products standard that independently demonstrates that a building material has been produced in a way that has minimised its environmental impact and is sustainable. Eurobond is the first UK composite panel manufacturer to achieve this standard.

BREEAM

The BREEAM family of assessment methods and tools are designed to help construction professionals understand and mitigate the environmental impacts of the developments they design and build. When the building has been evaluated through BREEAM, the building owner, developer, and/or occupant may use the assessment rating to demonstrate the sustainability performance of their building in the marketplace.

The environmental credentials of Eurobond's products ensure that, within the materials section of BREEAM assessment, buildings are given an ideal start to achieve a high rating. Responsible sourcing is becoming more important and this is also reflected in the latest version of BREEAM, which now awards extra credits for products that have been assessed to BES 6001

End of Life Solutions

The raw materials used in the manufacture of Eurobond composite panels have a high content of recycled materials and this helps to minimises the environmental impact of construction, reducing carbon emissions by diverting materials from landfill and limiting the depletion of finite natural resources. At the end of a building's life Eurobond composite panels offer a 'Cradle to Cradle' approach to recycling where materials are recycled in a closed loop. This maximises material value whilst minimising the damage to ecosystems - products are used, recycled and re-used again without losing any material quality.

In independent tests WRAP [Waste & Resources Action Programme] found Eurobond's products are fully and independently recyclable, allowing new stone wool cored composite panels to be made diverting waste from landfill.

If you would like further information on the performance credentials of Eurobond's panels please contact our technical team.

Telephone.
+44 (0) 29 20 77 66 77

Email.
technical@eurobond.co.uk

thermal and acoustic performance

Typical example of a Trisco Thermal Model for Europanel

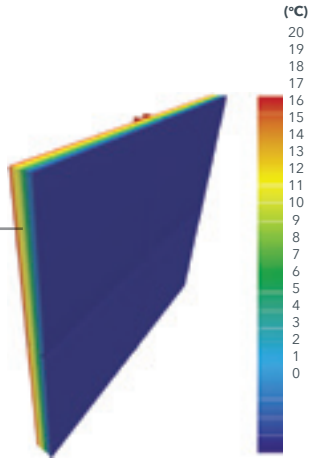

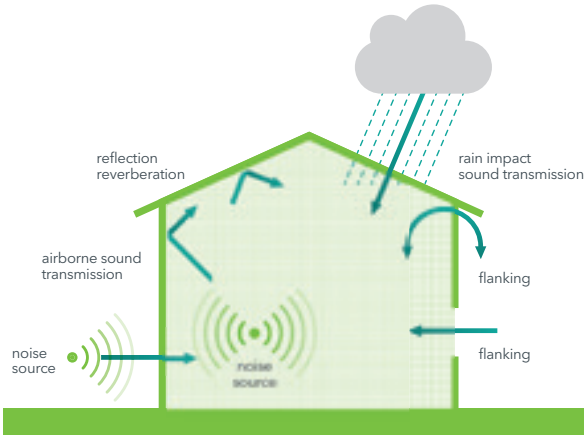

Thermal Performance

Eurobond panels have been specifically designed to meet the 'as built' thermal requirements of the Building Regulations and/or Technical Handbooks in England and Wales, Scotland and Northern Ireland.

Acoustic Performance

As buildings all need some form of acoustic control to meet specific client and/or regulatory requirements (Building Regulations Approved Document E), the following guidance is intended to provide the architect, designer, acoustic engineer and end user with qualification of Europanel performance in England and Wales, Scotland and Northern Ireland.

U-value and R-value calculations

Core Thickness (mm)	Europanel S5 and F5		Europanel S5 Extra, F5 Extra, G12, G30, G50	
	U value (W/m2K)	R value (W/m2K)	U value (W/m2K)	R value (W/m2K)
75	0.51	1.96	0.54	1.85
100	0.39	2.56	0.40	2.50
125	0.31	3.23	0.33	3.03
150	0.26	3.85	0.27	3.70
175	0.22	4.55	0.23	4.35
200	0.19	5.26	0.20	5.00
240	0.17	5.88	0.18	5.55

Weighted Sound Reduction index Rw (dB)

Core Thickness (mm)	Weighted Sound Reduction Rw(db)	
	Europanel S5 and F5	Europanel S5 Extra, F5 Extra, G12, G30, G50
75	31	31
100	32	33
125	32	33
150	33	34
175	34	35
200	34	36
240	34	36

weights, dimensions and tolerances

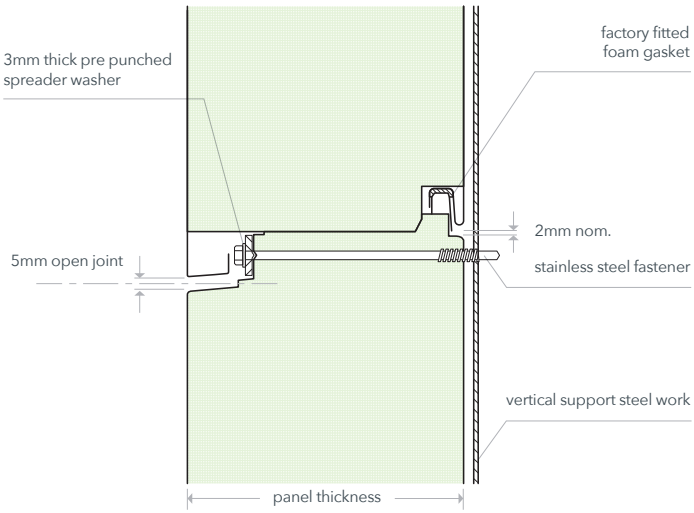

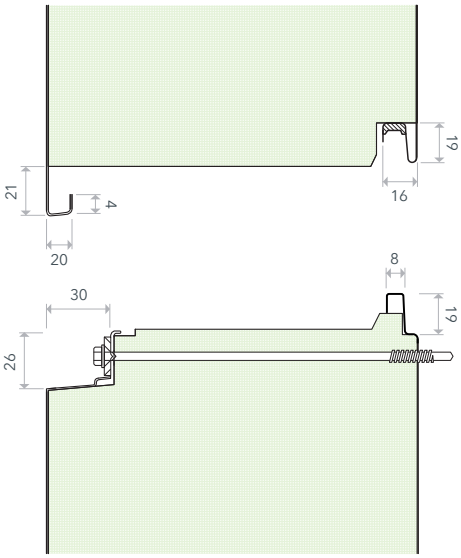

Standard Specification

600, 900, 1000, 1150 & 1200mm modules only (S5, S5 Extra, F5 and F5 Extra)

300-1200mm module widths in 1mm increments (G-series)

Standard colours from the Colorcoat HPS200 Ultra® by Tata Steel and Colorcoat Prisma® by Tata Steel ranges to external face 0.7mm gauge

Satin Line (Micro rib) profile available in Europanel S5 and S5 Extra

Architecturally Flat profile available in Europanel F5, F5 Extra, G12, G30 & G50

Europanel S5 & F5 – 100kg/m3 density

Europanel S5 Extra, F5 Extra & G-series – 120kg/m3 density

Highly engineered roll formed steel Omega Section with flush insert

Powder coated extruded aluminium Omega Sections with flush or recessed insert

White polyester lining 0.5mm gauge

Panels less than 1.8m long can be supplied and are subject to an extra charge

All panel lengths subject to technical verification

Tolerances

Length	±10mm
Width	±1 mm
Thickness	±2mm
Corners (leg length)	±3mm
Flatness	1.5mm from the theoretical flat plane over a distance of 700mm
Joint gap	±2mm

Weights

	Europanel S5 & F5	Europanel S5 Extra, F5 Extra and G-series	Europanel S5 & F5	Europanel S5 Extra, F5 Extra and G-series
	0.7/0.5mm Steel faces		0.7/0.7mm Steel face	
Core Thickness (mm)	Weight (kg/m2)			
75	17.7	19.2	19.4	20.9
100	20.2	22.2	21.9	23.9
125	22.7	25.2	24.4	26.9
150	25.2	28.2	26.9	29.9
175	27.7	31.2	29.4	32.9
200	30.2	34.2	31.9	35.9
240	34.2	39	35.9	40.7

panel profiles

The Europanel panels are available with the following profile finishes:

- Architecturally flat
- Satin line
- V-Groove

flat profile

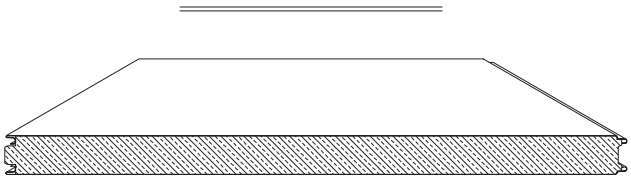

satin line profile

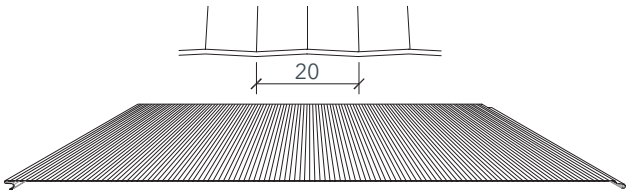

v-groove profile

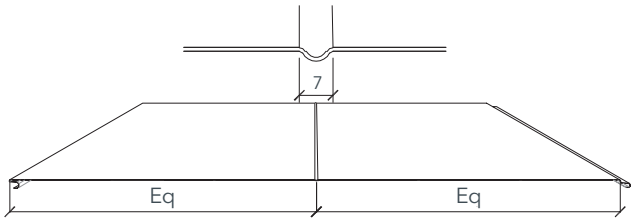

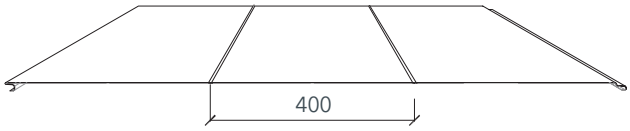

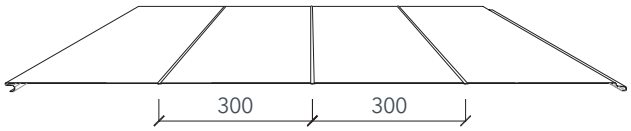

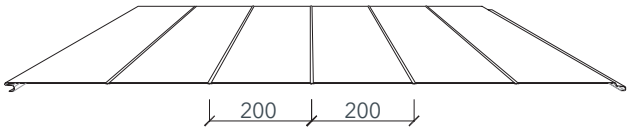

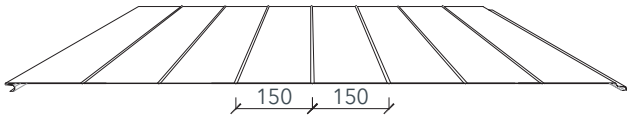

standard details

europanel horizontally laid

Eurobond have a comprehensive library of standard details and BIM files that cover Europanel in both horizontal and vertical applications.

NB: Always check **www.eurobond.co.uk** for the latest version of any drawing. Available as PDF files and DWG format to allow them to be directly imported into project-specific drawings.

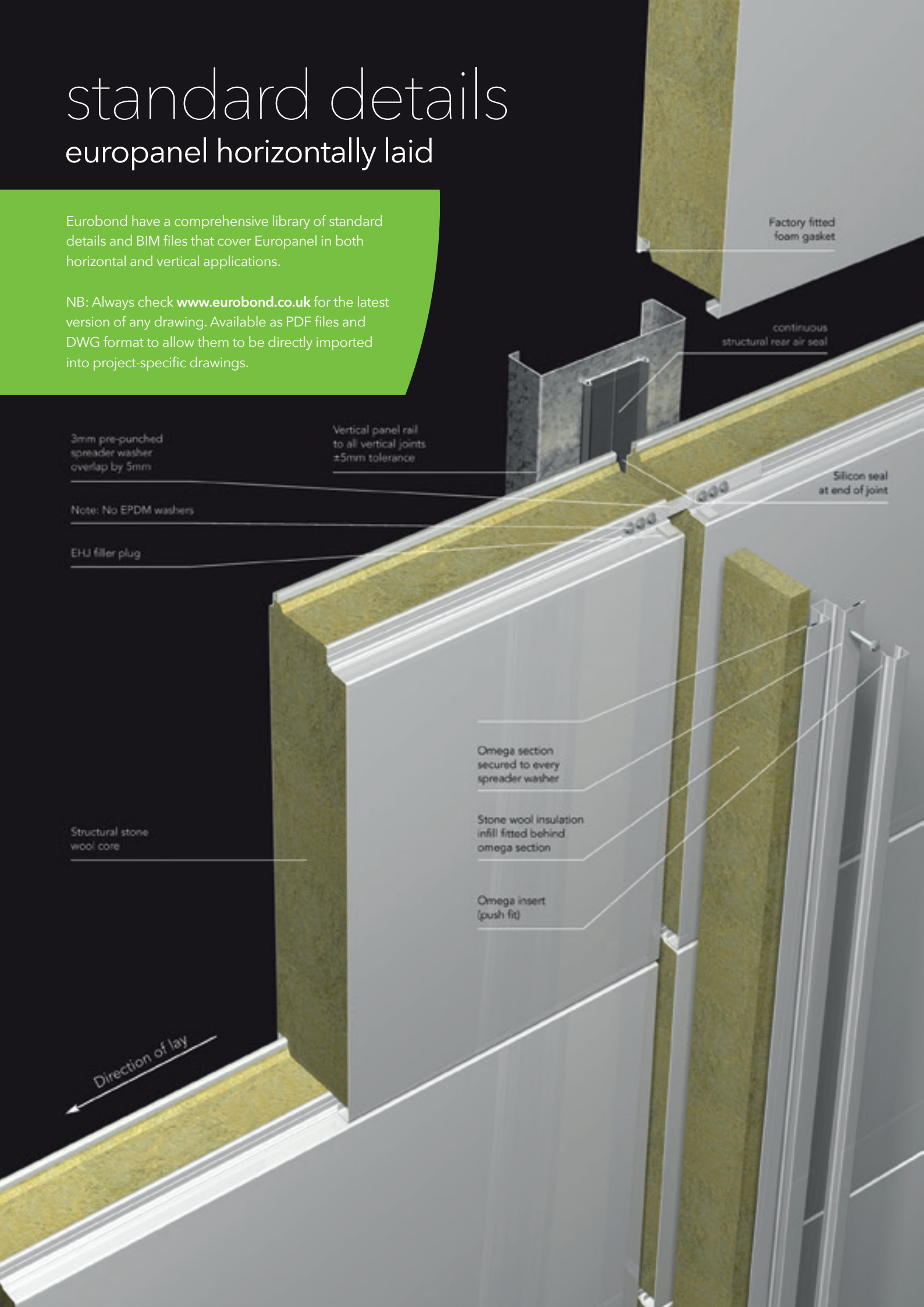

horizontal joint detail
S5/F5, EPH-01A

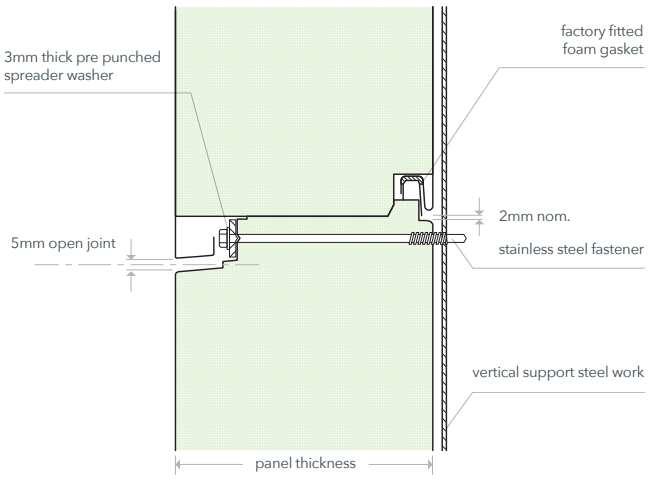

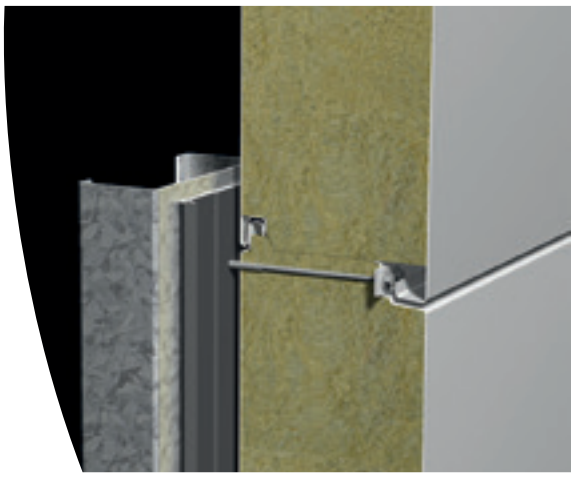

vertical joint on horizontal installation
S5/F5 - steel omega with flush insert

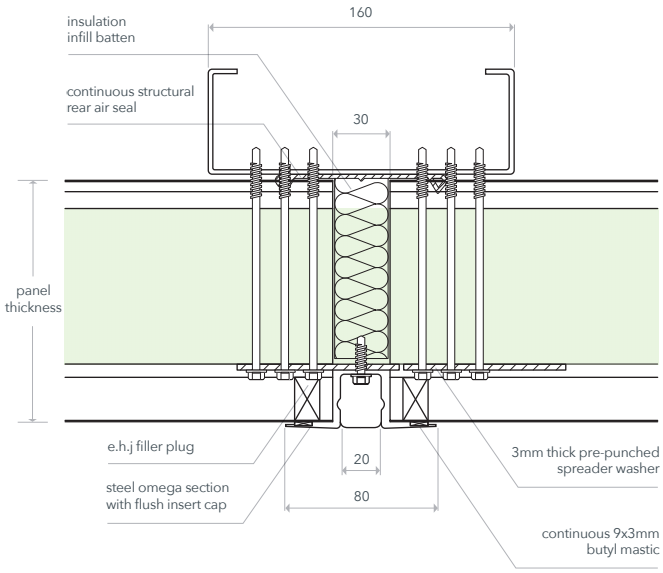

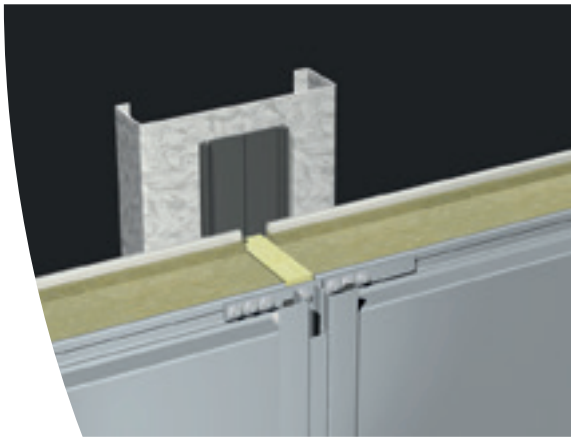

standard details g-series

europanel horizontally laid

G12
joint detail

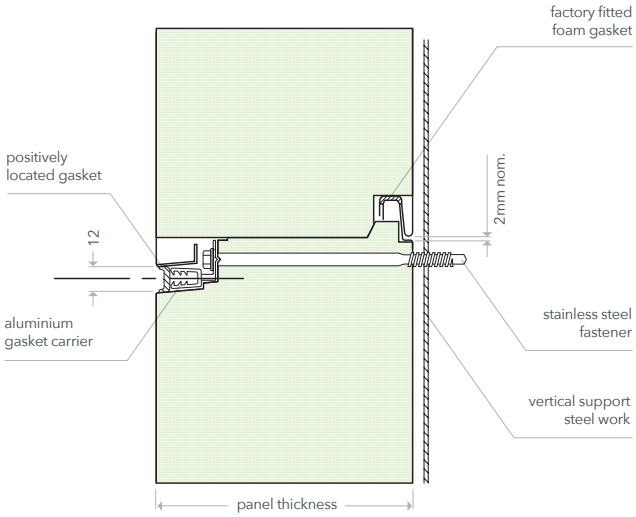

G30
joint detail

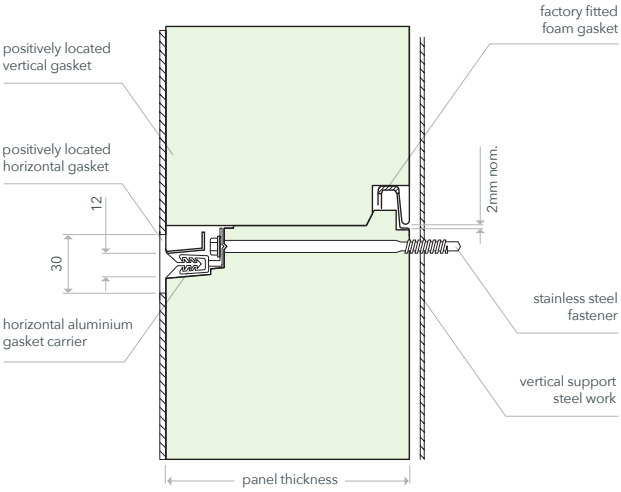

G50
joint detail

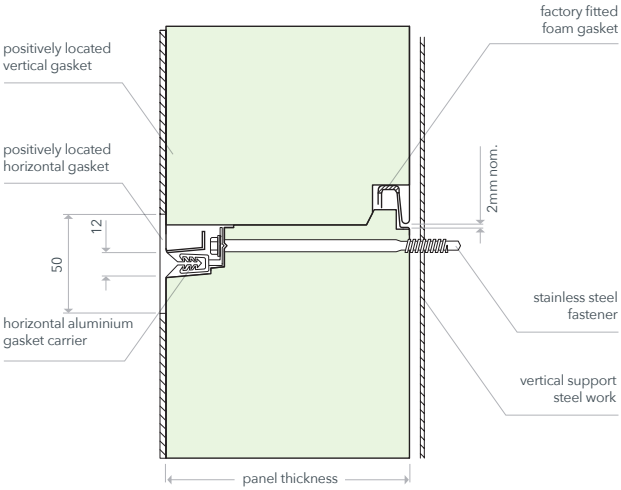

G12
joint steel omega with flush insert and horizontal gasket

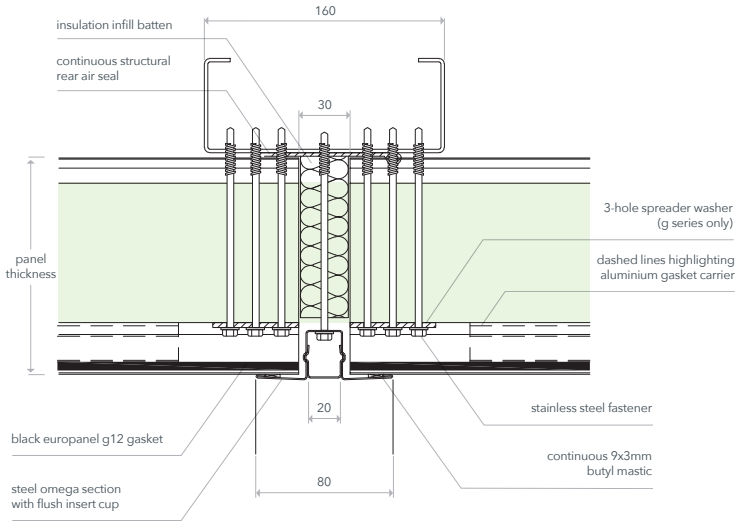

G30
joint PDM gasket fitted into 15mm gap between panels

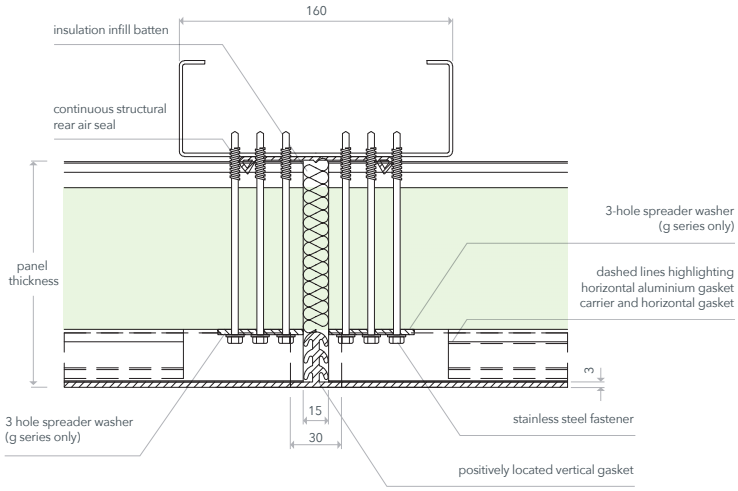

G50
joint EPDM gasket fitted into extruded aluminium profile

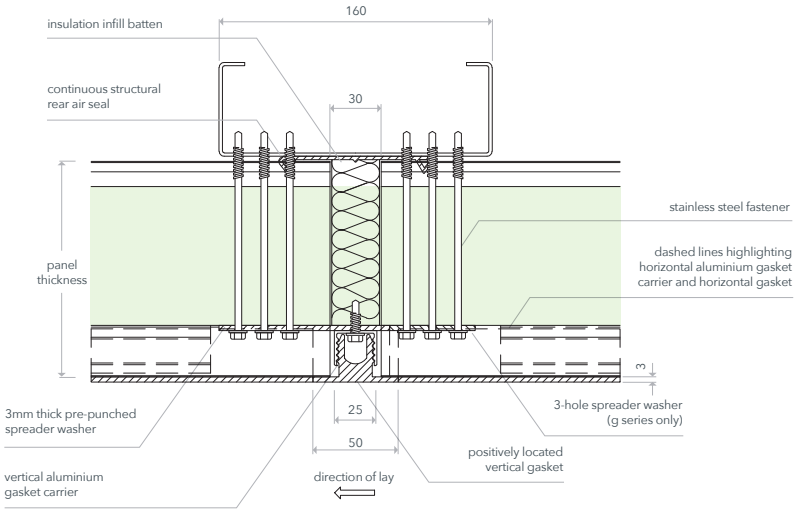

standard details S5/F5

europanel horizontally laid

typical base detail

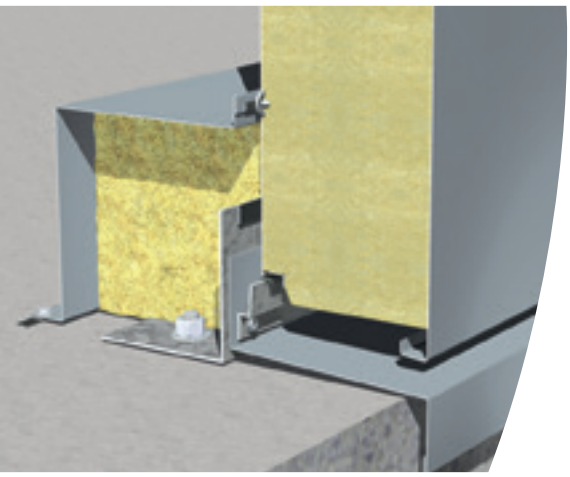

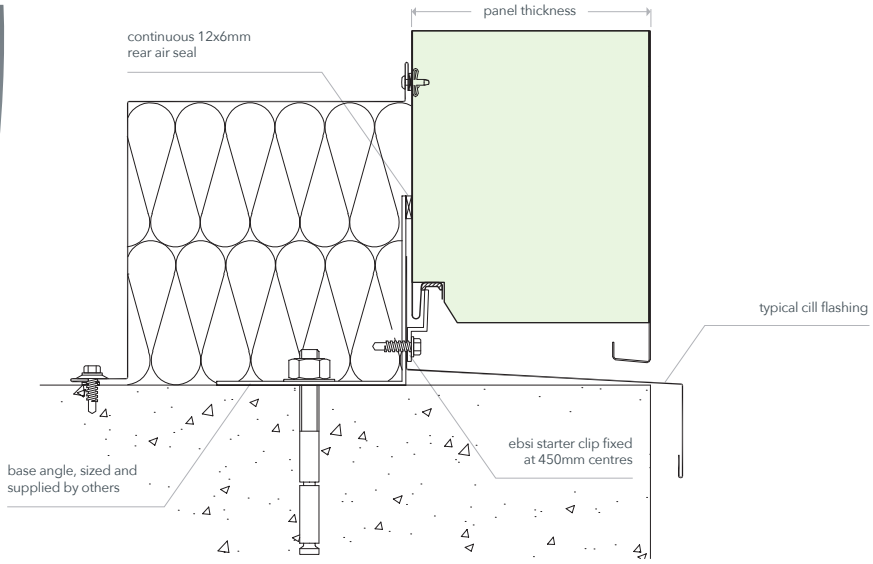

typical base detail

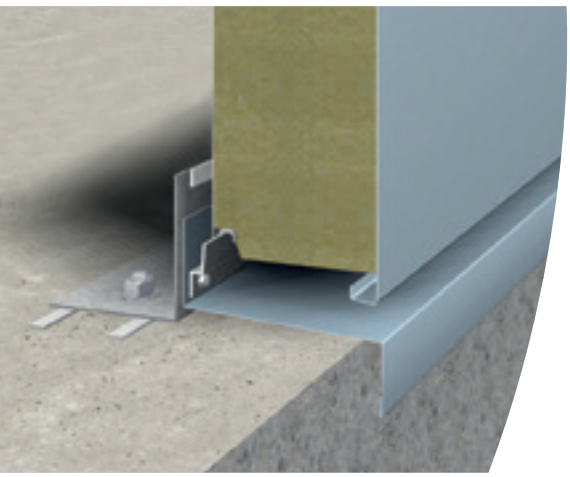

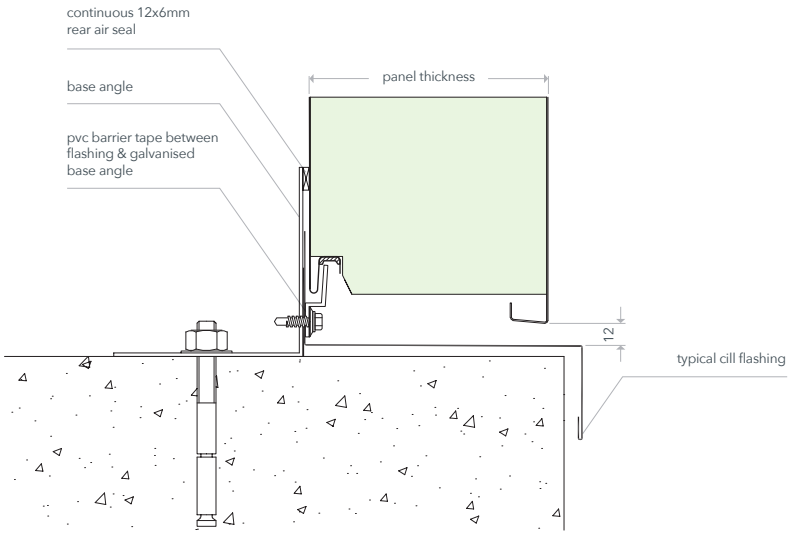

omegas & extrusions

In addition to the five 'standard' system configurations we also offer a range of architectural extrusions.

These provide even greater flexibility and scope for architectural expression and can be fixed vertically at panel joints or 'mid' panel as required. The range of extrusions is available finished with a high specification polyester powder coating that can be specified to colour match with the supporting panels (or any other RAL colour) and are produced in standard lengths of 3m.

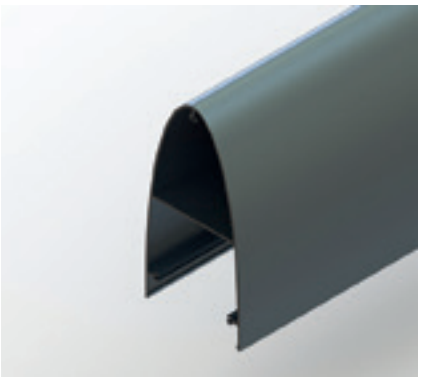
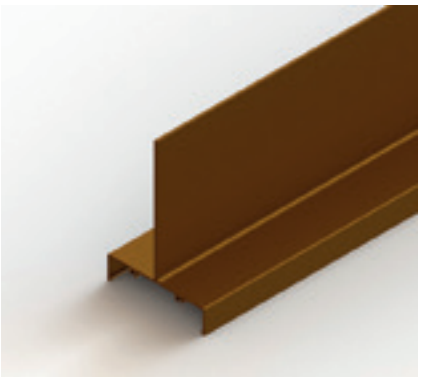
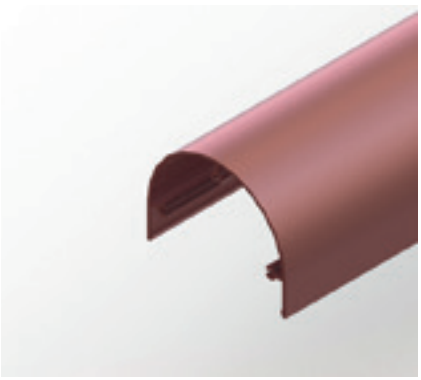
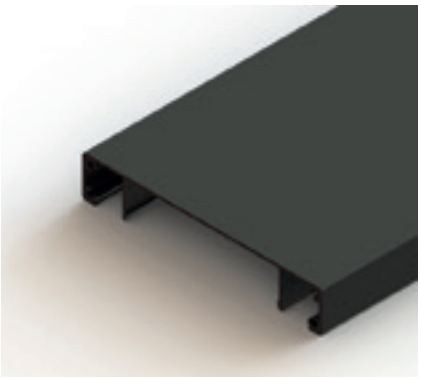
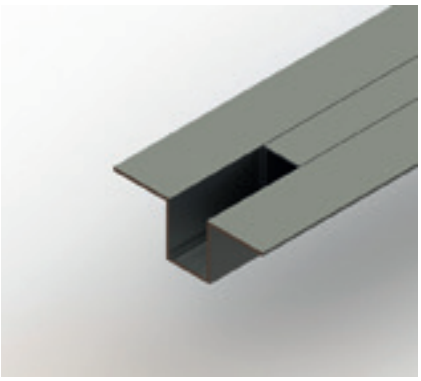
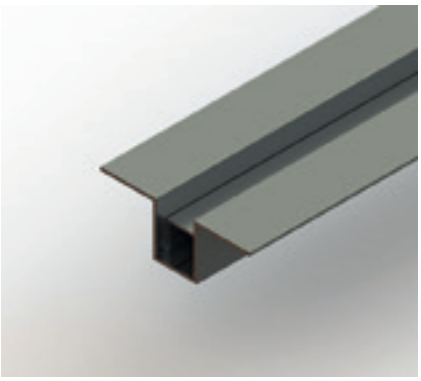
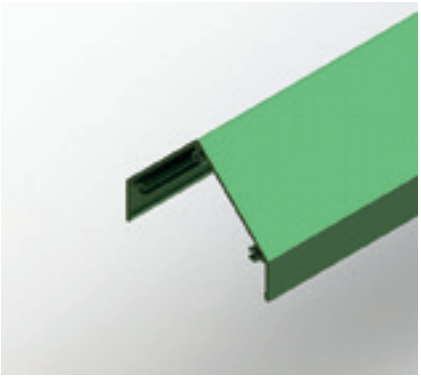
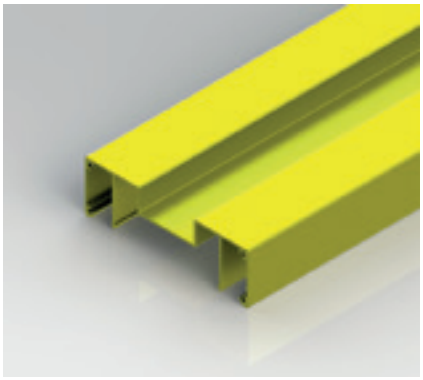
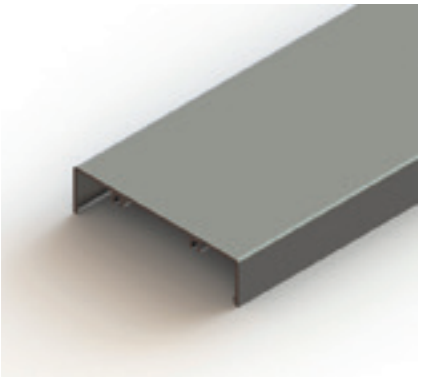

standard details

europanel vertically laid

Eurobond have a comprehensive library of standard details and BIM files that cover Europanel in both horizontal and vertical applications.

NB: Always check **www.eurobond.co.uk** for the latest version of any drawing. Available as PDF files and DWG format to allow them to be directly imported into project-specific drawings.

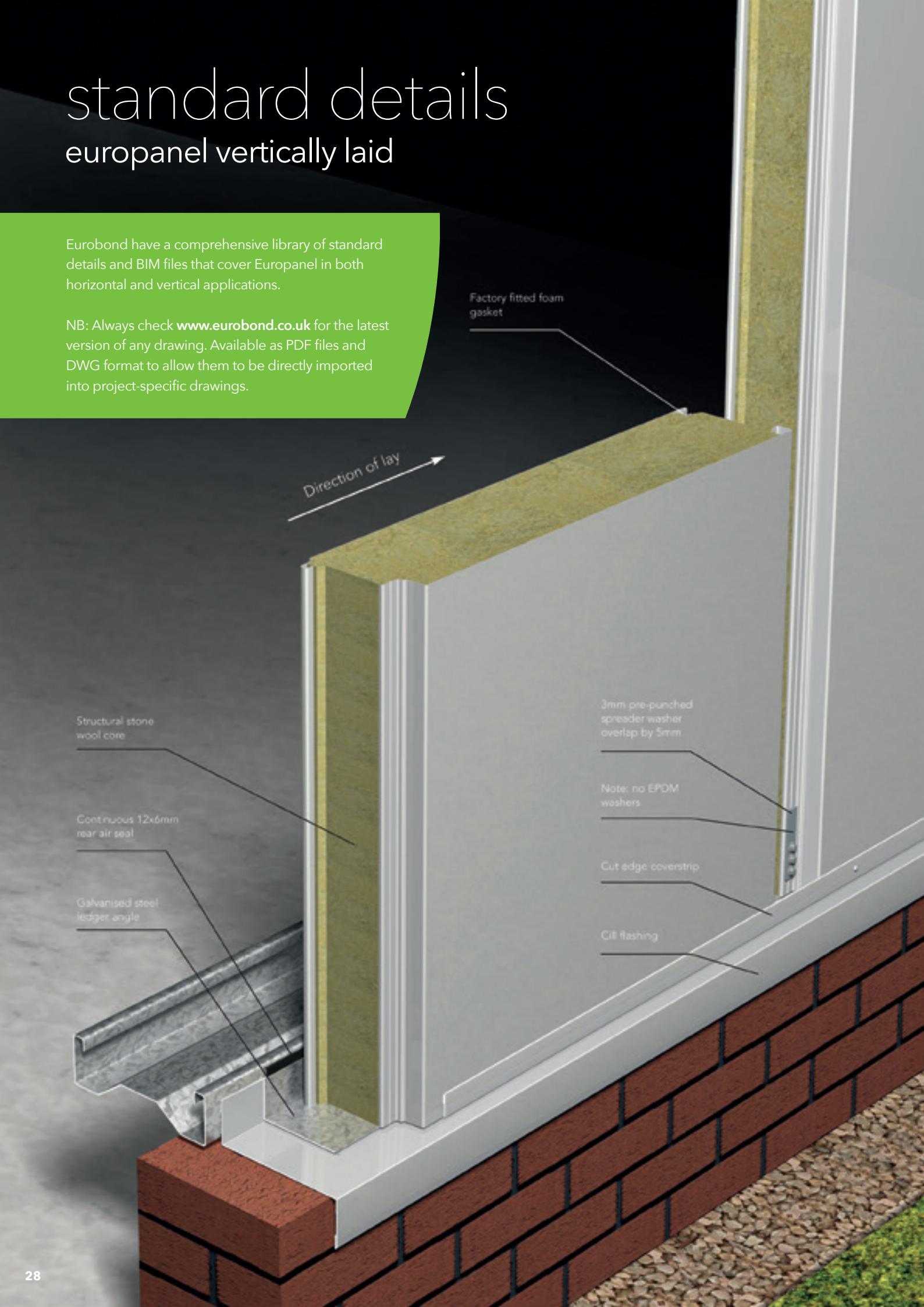

vertical joint detail
S5/F5, EPV-01A

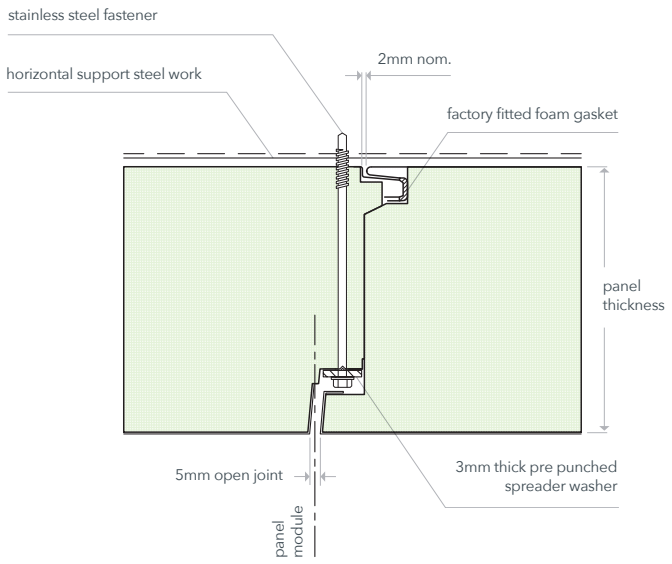

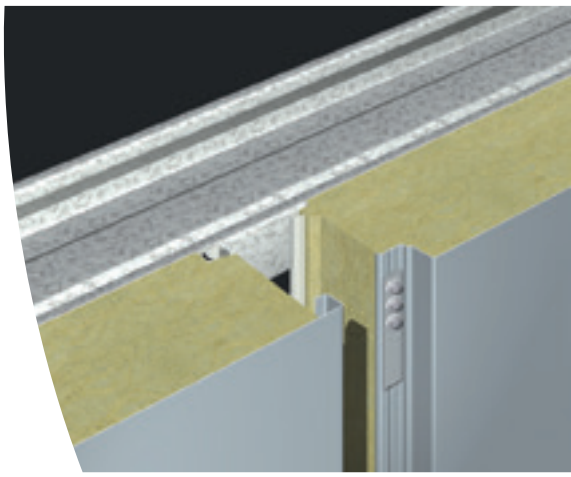

horizontal joint in a vertical installation
S5/F5 - steel omega with flush insert

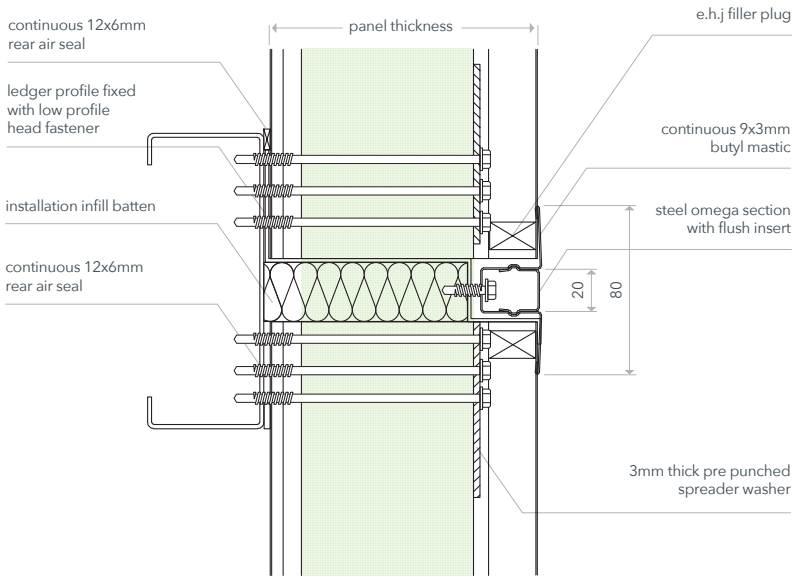

standard details F5/S5

europanel vertically laid

typical base detail

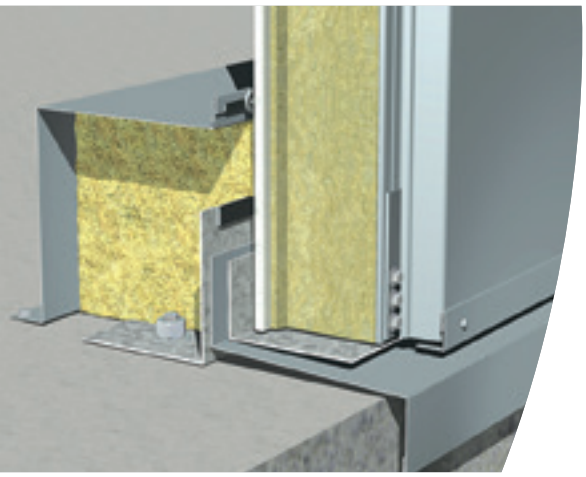

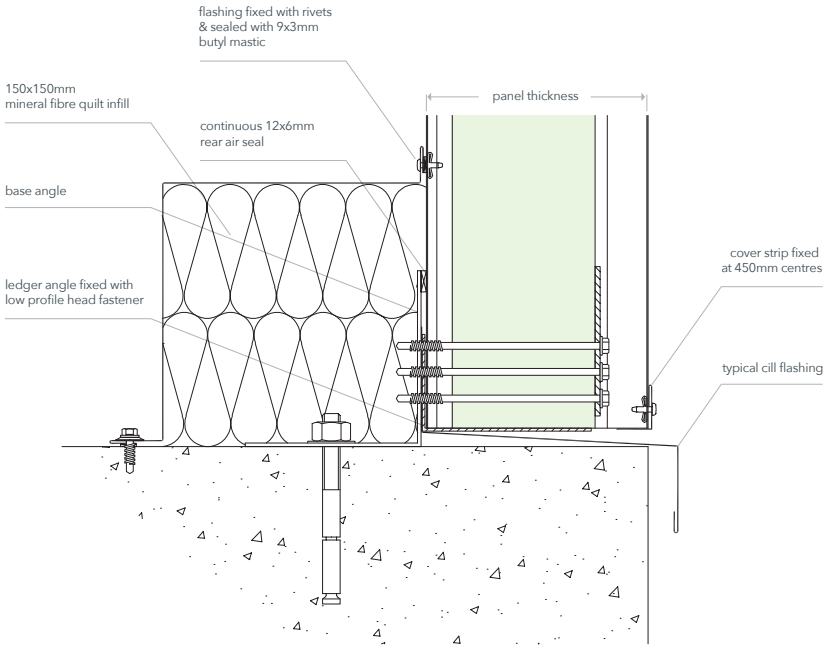

typical base detail

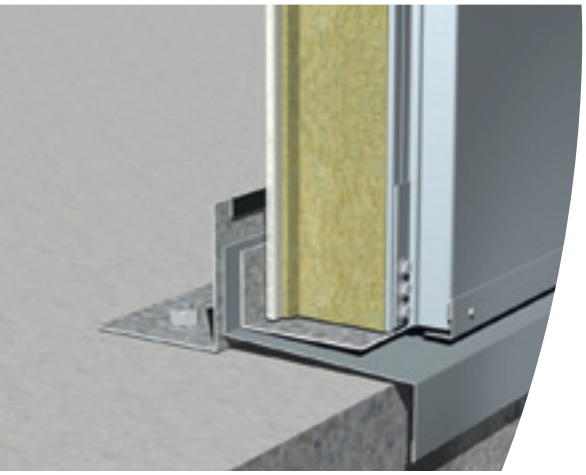

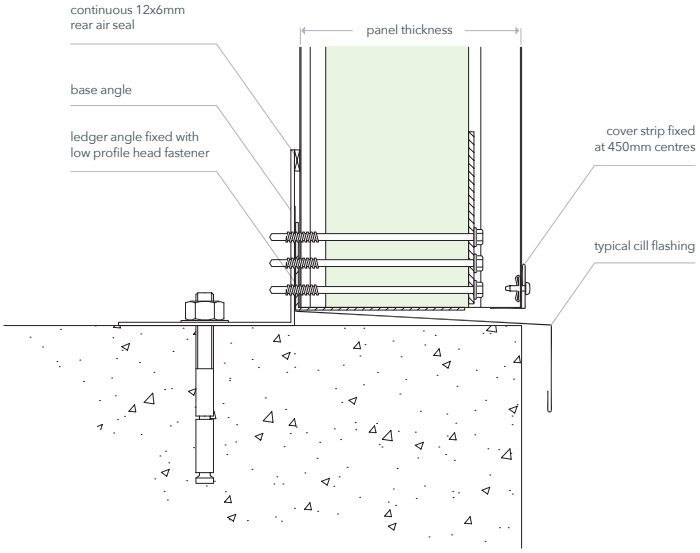

standard details g-series

europanel vertically laid

G12 vertical joint detail

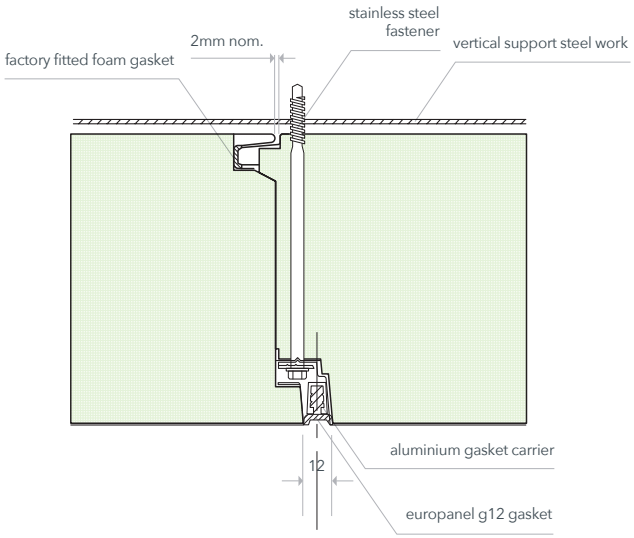

G30 vertical joint detail

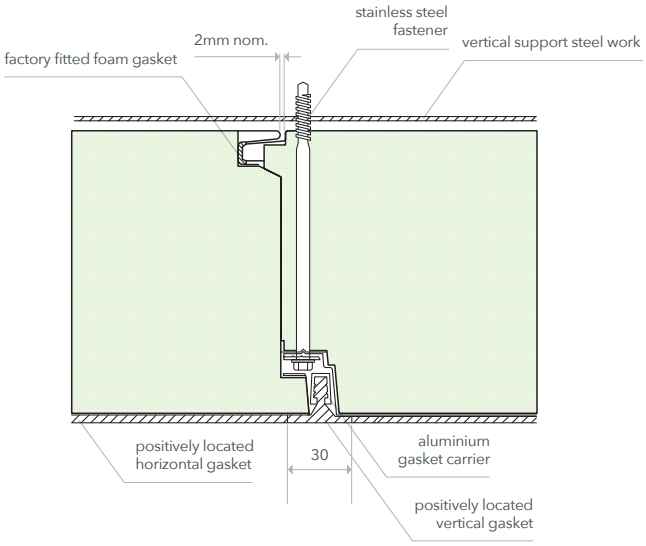

G50 vertical joint detail

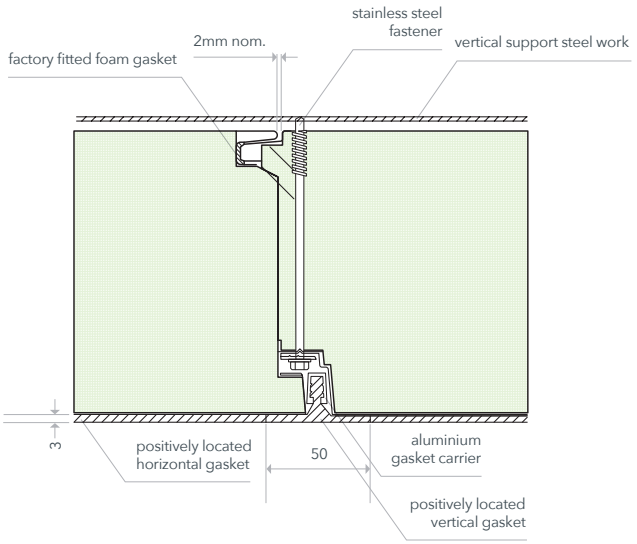

standard details g-series

europanel vertically laid

typical base detail G12

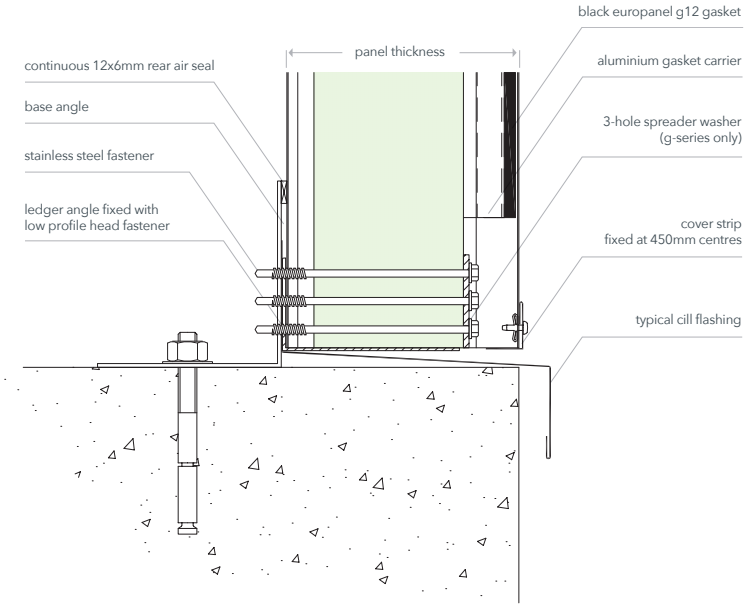

typical base detail G30/G50

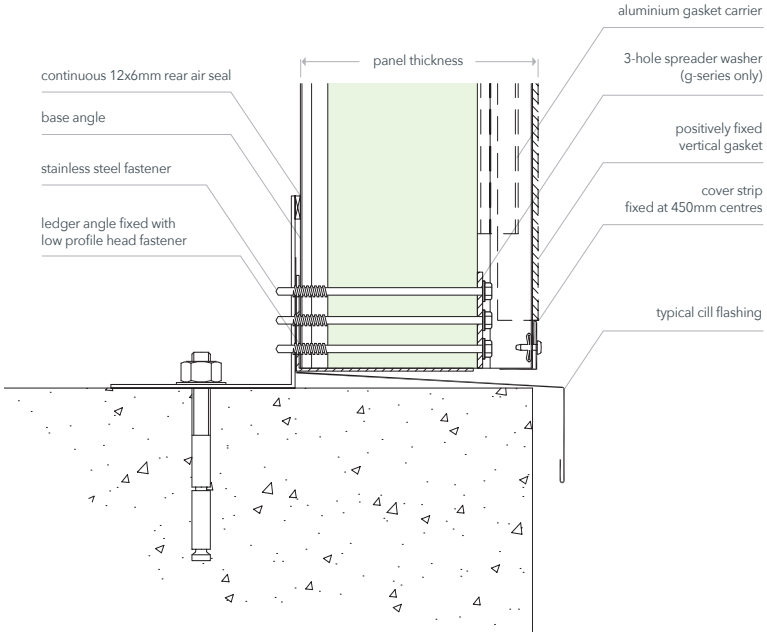

europanel
vertical head detail

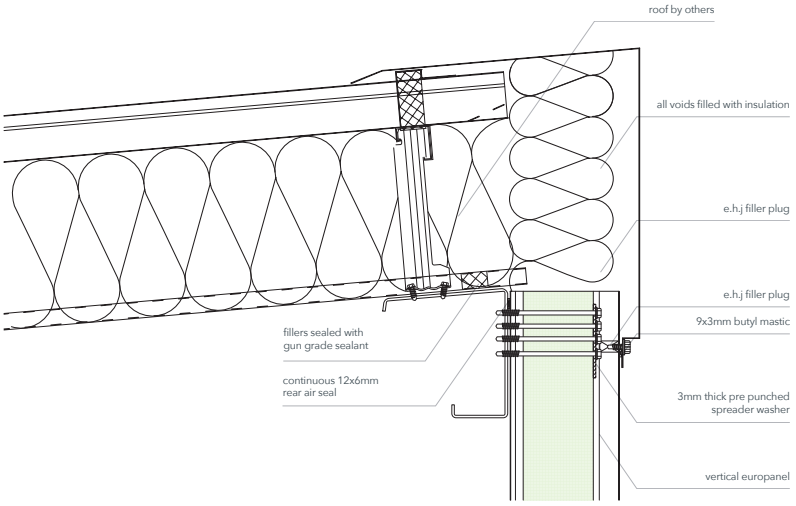

europanel
horizontal
head detail

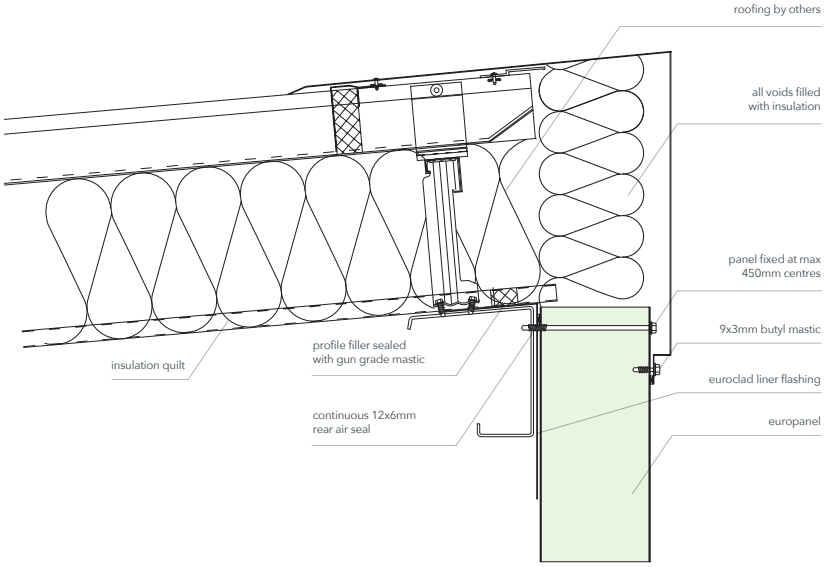

europanel
parapet detail

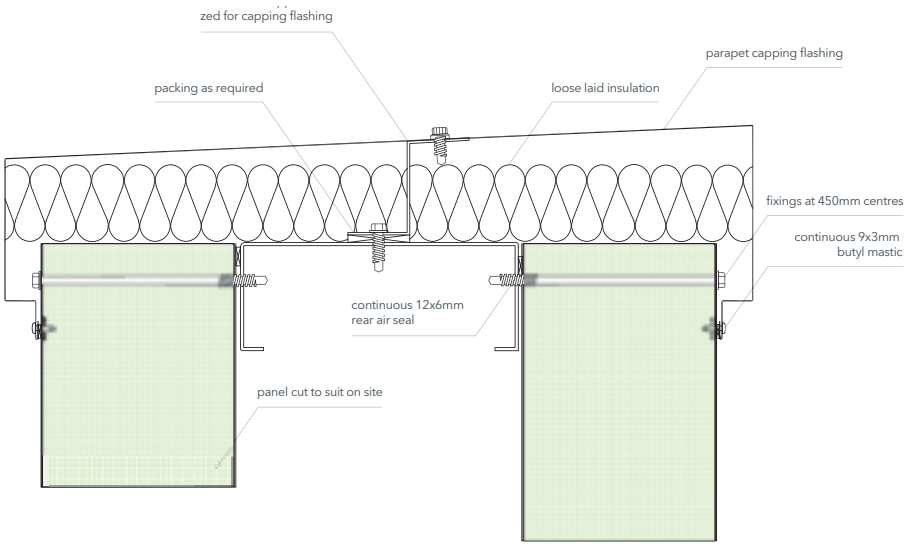

standard details europanel with windows

europanel vertical with window head

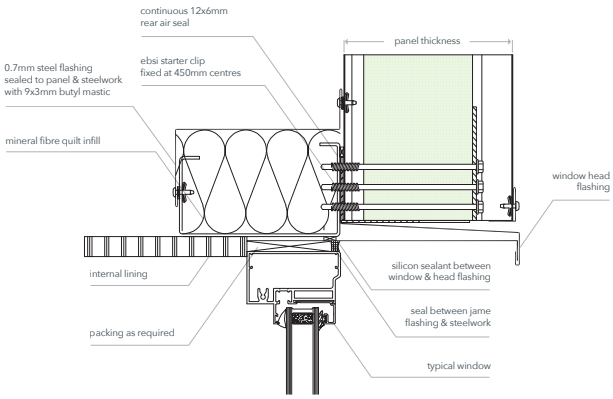

europanel horizontal with window head

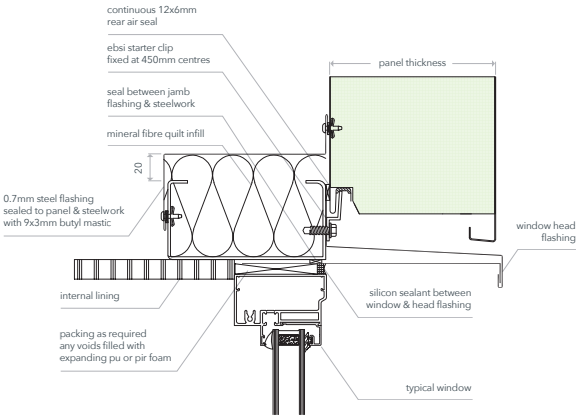

europanel vertical with window jamb

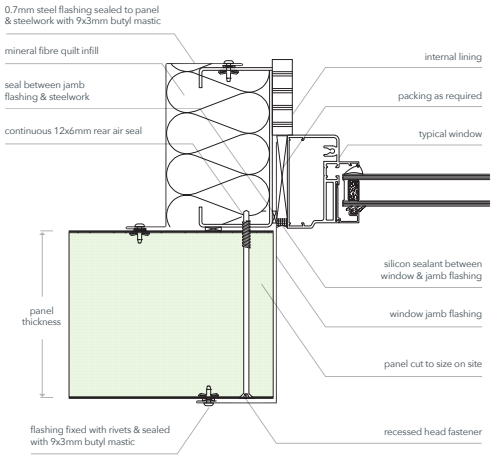

europanel horizontal with window jamb

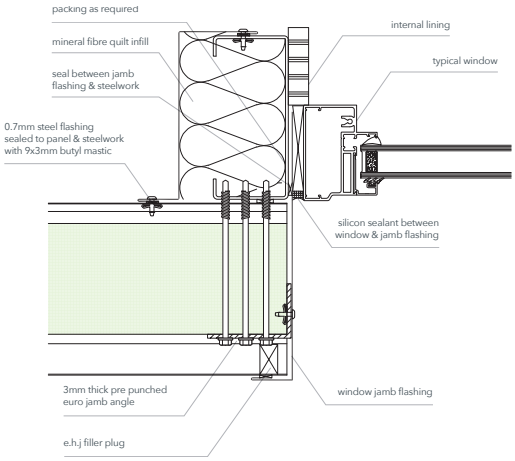

europanel vertical with window cill

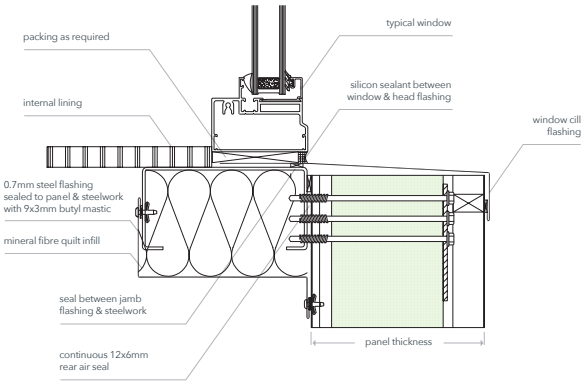

europanel horizontal with window cill

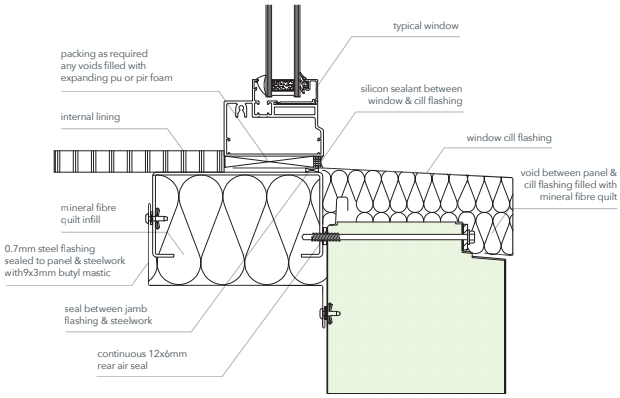

ancillaries fasteners

Eurobond recommend that fasteners should be stainless steel, the exact specification depends upon panel thickness and the gauge of steel work to which the panels are to be positively fixed.

Specifiers can choose from a wide variety of proprietary fasteners and should refer to the manufacturers' literature for the full range of available products.

Most of the fasteners used for metal cladding applications are self-tapping and self-drilling, although self-tapping only screws are also available.

Fasteners can generally be divided into two categories: Primary fasteners transfer the loads from the cladding to the primary and/or secondary steelwork. Their main function is, therefore, structural.

Secondary fasteners are used to form the interface between additional features and the panel face (e.g. flashings; rails to carry Rainspan architectural façades).

While their primary purpose is to provide a weathertight seal at the joint, their structural properties may be used to provide lateral restraint and to transfer load.

Visible fasteners have the option of factory coloured plastic heads to suit the weathered sheet.

Please note Eurobond do not supply fasteners but you can contact our technical department who will be happy to provide recommended fastener types.

Telephone.
+44 (0) 29 20 77 66 77

Fax.
+44 (0) 29 20 36 91 61

Email.
technical@eurobond.co.uk

factory mitred corners

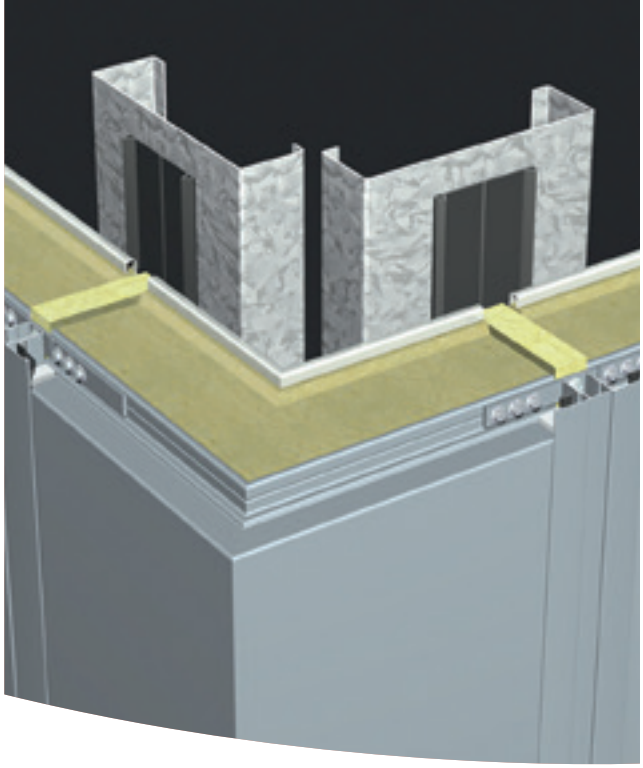

A range of bespoke factory mitred corners are available to suit all thicknesses of Europanel. Corners can be supplied with angles to suit, any angles between 65° and 175°.

Horizontal corner panels

Eurobond offers both internal and external corner panels for horizontally laid applications in all panel types, the maximum overall girth is 2000mm, with a minimum leg of panel thickness +150mm.

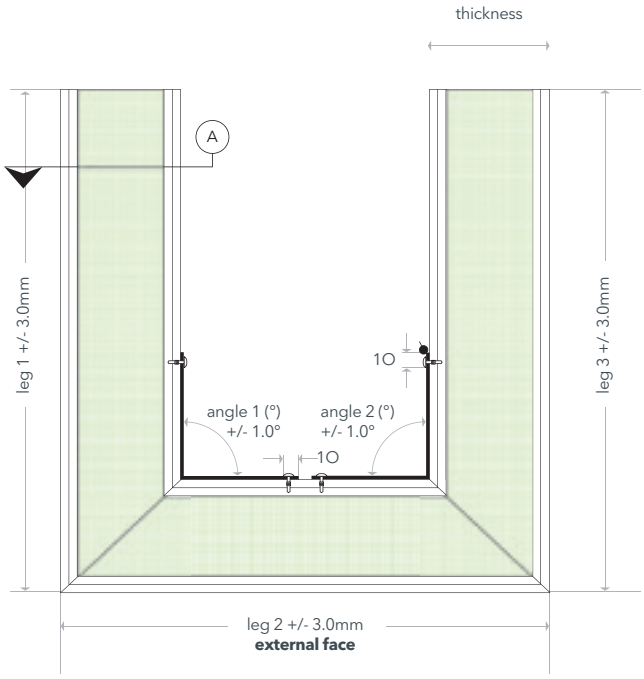

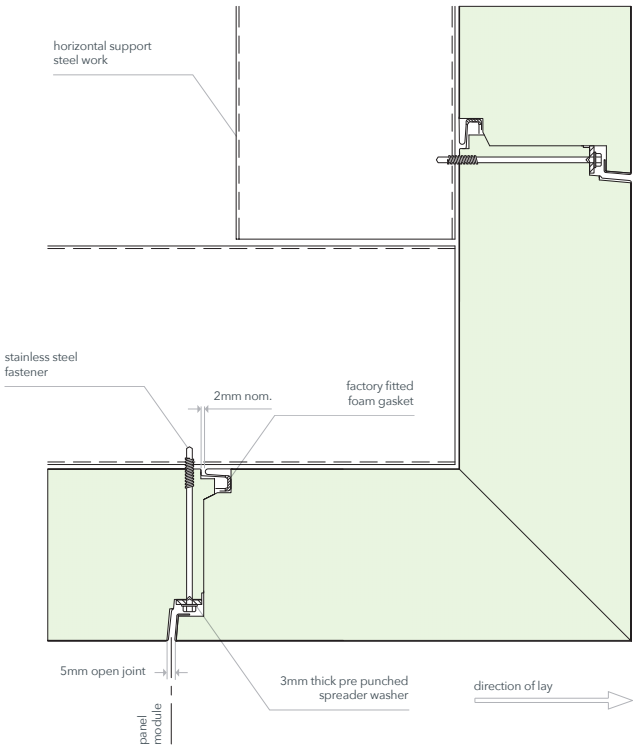

Horizontal double cranked corners

Eurobond can fabricate double cranked corners but due to their complex nature Eurobond should be contacted for confirmation of allowable dimensions. **Note:** The dimension of leg 1 & 3 must be less than or equal to leg 2.

Vertical corners

Eurobond manufacture vertical corners to a maximum length of 1.2m Long (175- 240mm thickness) and 2.4m long (75- 150mm thickness), maximum girth is 1200mm with a minimum external leg of the panel thickness +150mm.

technical service and support

Eurobond provides a comprehensive Technical Service which can assist in correct specification, detailing and installation of panel systems.

In depth fire performance knowledge

Eurobond has extensive knowledge of the performance of composite panels in fires developed over many years from a wide range of standard and bespoke fire tests as well as working closely with leading fire engineers.

This allows us to:

- Provide guidance in selecting the most appropriate products to achieve the required fire performance.
- Provide correct detailing for each product.
- Advise on the Building Regulations and insurance company specific fire requirements.

All Eurobond products are:

- Zero ozone depleting potential and zero global warming potential.
- Full Life Cycle Assessed contributing to excellent chance of achieving a high rating in a BREEAM assessment.
- Assessed to BES 6001 Responsible Sourcing of Construction Products, ISO 9001:2008 and ISO14001:2004.
- Fully compliant with relevant Building Regulations and Technical Handbooks.
- High in recycled material content.
- Fully recyclable at end of life.

Training

Highly experienced site engineers are available to carry out site training. There is also a comprehensive range of training courses at either customer premises or at the factory in Cardiff.

This includes:

- Product application and installation training to ensure the correct specification and use of Eurobond products.
- Pre-installation project guidance.
- Project detail confirmation.
- Sign-off and project completion reports.

Eurobond research and development staff are continually seeking to improve the performance of existing products and develop new ideas. Experience gained through research and development allows Eurobond to speak with authority on the performance of its panel systems, confident in the knowledge that advice given is based on information gained through testing, prototyping and practical experience.

Members of Eurobond's Technical Department are available to attend site meetings to provide expert technical advice at the design stage, during installation and post-installation.

Sales team

Regionally based sales and product specialists are available to provide advice, presentations and one-to-one service.

Project Specific Design Advice

As well as the standard information and range of details available, project specific information can be developed to cover:

- Load/span calculations.
- Thermal and acoustic calculations.
- Bespoke CAD details.
- NBS Specifications.
- Project specific wind load modelling tool.
- BIM.

BIM

Eurobond has BIM files available for its range of stone wool core internal and external wall and ceiling composite panels. It includes material colours and COBie datasheet parameters and the designer is supported by a wide range of construction details.

The files are available in a number of file formats.

Available at **eurobond.co.uk/bim** or by contacting Eurobond Laminates Technical Service team on **02920 776677**

technical@eurobond.co.uk

TATA STEEL

Colorcoat® by Tata Steel products & services

The Colorcoat® brand provides the recognised mark of quality and metal envelope expertise exclusively from Tata Steel. For nearly 50 years Tata Steel has developed a range of technically leading Colorcoat® pre-finished steel products which have been comprehensively tested and manufactured to the highest quality standards. Tata Steel supply pre-finished steel to normal and special tolerances according to EN 10143:2006 to ensure that the cladding performs as designed. The Colorcoat® products are supported by a range of services such as comprehensive guarantees, colour consultancy and technical support and guidance.

To ensure the long-term performance and appearance of the building, it is important that the pre-finished steel product is specified alongside the cladding system. To secure the peace of mind that comes from a rigorously manufactured and tested product from Tata Steel, ensure Colorcoat® as well as the individual product name is specified for your cladding system e.g. Tata Steel Colorcoat HPS200 Ultra®.

Colorcoat HPS200 Ultra® by Tata Steel

Colorcoat HPS200 Ultra® by Tata Steel provides exceptional performance and corrosion resistance for building envelope applications.

It is backed up with extreme testing and real world global data to demonstrate the best combination of excellent colour stability, gloss retention and outstanding durability.

Key benefits include:

- Optimised Galvalloy® metallic coating for exceptional corrosion resistance and cut edge protection.
- Surpasses requirements of Ruv4 and RC5 as per EN 10169:2010 proving excellent colour and gloss retention and corrosion resistance.
- Scintilla® embossed as a mark of authenticity from Tata Steel.
- Made in the UK for a lower carbon footprint.
- Certified to BES 6001 Responsible Sourcing standard.
- Confidex® Guarantee for up to 40 years for the weatherside of industrial and commercial buildings with no inspection or maintenance to maintain its validity in Zone 1 and Zone 2 areas.
- Exceeds requirements of CPI5 as per EN 10169:2010 demonstrating excellent barrier properties when used internally.
- BBA certified for durabiltiy in excess of 40 years.
- Double sided option providing a robust barrier on the reverse side of the steel substrate for buildings with demanding internal and external environments.
- Fully recyclable with full product traceability and REACH compliance.

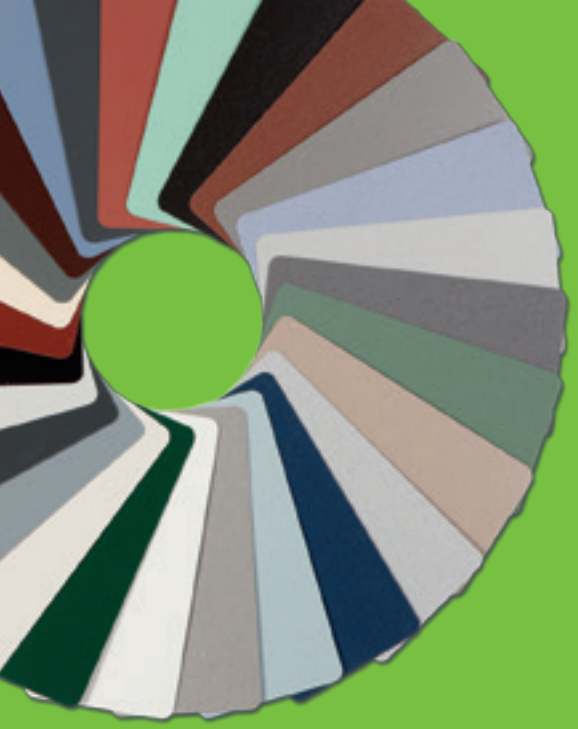

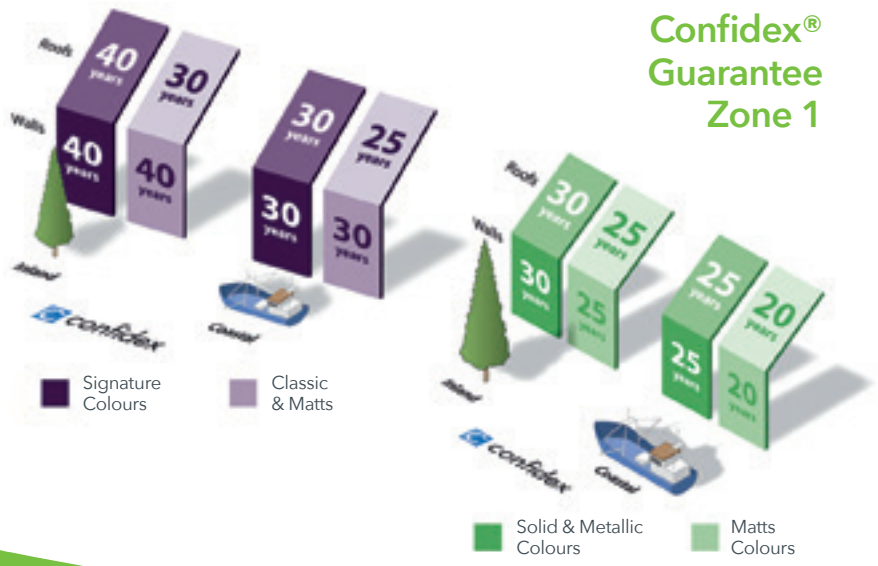

Colorcoat Prisma® by Tata Steel

Colorcoat Prisma® is technically and aesthetically superior pre-finished steel that represents the ultimate combination of durability and aesthetic appeal. As such, it provides the designer with the freedom to create architecturally striking buildings with exceptional performance, that meet the desired functionality of the building.

Key benefits include:

- Contemporary colours including solids, metallics and matt shades providing an optically smooth finish for modern designs.
- All colours surpass requirements of Ruv4 and RC5 certification as per EN 10169:2010 proving outstanding colour retention and corrosion resistance.
- Optimised Galvalloy® metallic coating for ultimate corrosion resistance and cut edge protection.
- BBA Certification in excess of 40 years for all colours, providing independent verification.
- Reverse side branding making traceability easy, so you can rest assured that your building is protected with the highest quality from Tata Steel.
- Ideal when used in integrated renewable energy generation systems. Colorcoat Prisma® is proven to provide superior solarthermal absorption capability and excellent durability when used as a collector for active solar air heating solutions.
- Double sided capability for rainscreens and rainwater goods where double sided protection is required.
- Confidex® Guarantee for up to 30 years for the weatherside of industrial and commercial buildings with no inspection or maintenance to maintain its validity in Zone 1 and Zone 2 areas.

Colorcoat® by Tata Steel services

Confidex® Guarantee

The Confidex® Guarantee from Tata Steel was first launched in 1992 and since then has remained best in class. Confidex® from Tata Steel offers the most comprehensive guarantee for pre-finished steel products in Europe and is available for industrial and commercial buildings with Colorcoat HPS200 Ultra® and Colorcoat Prisma®. The Confidex® Guarantee is clear and simple and unlike many other guarantees, offers full remedial action in the unlikely event of coating failure.

Repertoire®

The Repertoire® Colour Consultancy can advise on colours and colour strategies using a range of standard shades, as well as discussing individual bespoke colour requirements. With a minimum order quantity of 2500 m2 Tata Steel can match almost any solid colour from physical swatches to commonly used references standards. Available in Zone 1 and Zone 2 areas in Europe with Colorcoat HPS200 Ultra® and Colorcoat Prisma® and the Confidex® Guarantee. For more information visit **www.colorcoat-online.com/repertoire**

Colorcoat® Technical Papers

Tata Steel have published a wide range of technical papers to independently guide and advise you on key issues in building design and construction commonly considered for roof and wall cladding systems using Colorcoat® products. From acoustics and air-tightness to low carbon design, gauge tolerance and fire performance, there is a technical paper that will help you find a solution. Visit w**ww.colorcoat-online.com/technical** to download the papers.

For more information about Colorcoat® by Tata Steel products and services visit **www.colorcoat-online.com**

Colorcoat, Colorcoat Connection, Colorcoat HPS200 Ultra, Colorcoat Prisma, Confidex, Galvalloy and Repertoire are registered trademarks of Tata Steel UK Limited.

europanel

eurobond

Eurobond Laminates Ltd
Wentloog Corporate Park
Cardiff, CF3 2ER

Telephone. +44 (0) 29 20 77 66 77
Fax. +44 (0) 29 20 36 91 61
Email. technical@eurobond.co.uk

www.eurobond.co.uk