1600 SG (SLOPED GLAZING)

Multiple Glazing Options and Spectacular Aesthetics with Curtain Wall Performance

Farm Family Insurance Companies
Glenmont, New York
ARCHITECT
Crozier Associates, PC, Albany, New York

Kawneer's 1600 SG is a standardized aluminum wall system for sloped glazing that delivers curtain wall performance. It is adaptable to three basic applications: (1) sloped glazing integrated with vertical curtain wall; (2) slopes terminating on a parapet wall or curb; and (3) slopes applied to a steel grid subframe. The 1600 SG system may also be used on inside or outside corner applications.

AESTHETICS

The system has a flush grid exterior with a 2-1/2" (63.5 mm) sightline. Rafters are available in 3-1/8" (79.4 mm), 4-3/4" (120.7 mm) and 6" (152.4 mm) depths to meet design or performance requirements. Additionally, an 8-5/8" (219.1 mm) rafter is available for longer spans. 1600 SG accepts 3/16" (4.8 mm) to 1-5/16" (33.3 mm) thick glazing material. Glazing is accomplished (from the exterior) with pressure plates and wet sealed.

ECONOMY

1600 SG is factory fabricated, shipped knocked down and installed as a stick system. Screw spline fastening at purlin-to-rafter joints substantially reduces construction labor and also eliminates unsightly bolts and exposed fasteners.

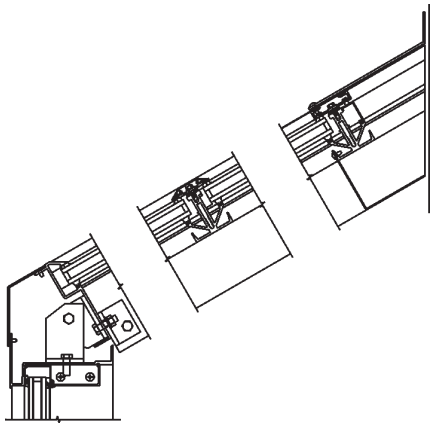

PERFORMANCE

An insulating thermal break is placed at the exterior of the glass plane to minimize heat loss and condensation. A drainage system in the rafters and purlins allows condensed moisture to be channeled through a continuous sill gutter to the exterior. The system has been tested in accordance with ASTM procedures for air, water and structural performance. Certified test reports are available upon request.

FEATURES

- Provides passive solar value
- Multiple glazing options
- High performance
- Positive drainage system

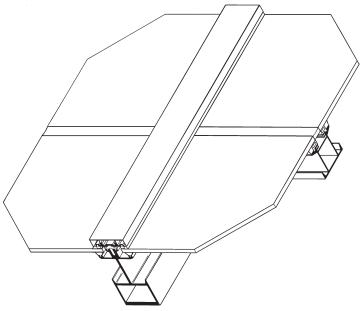

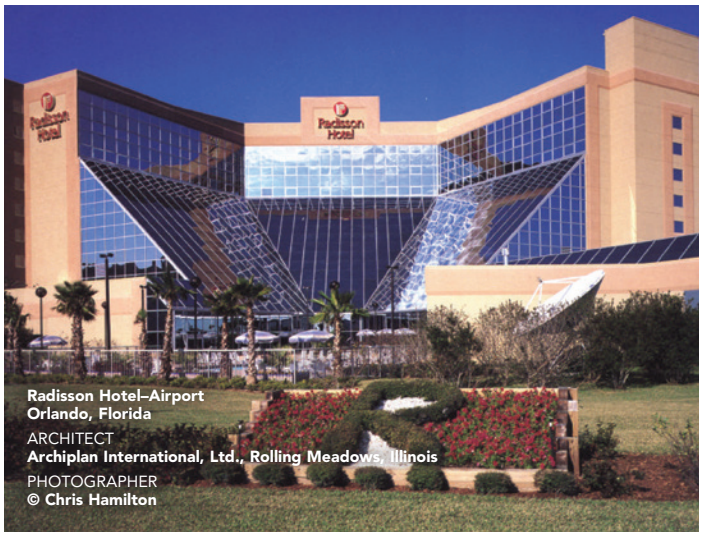

Radisson Hotel–Airport
Orlando, Florida
ARCHITECT
Archiplan International, Ltd., Rolling Meadows, Illinois
PHOTOGRAPHER
© Chris Hamilton

FOR THE FINISHING TOUCH

Permanodic™ anodized finishes are available in Class I and Class II in seven different color choices.

Painted finishes, including fluoropolymer, that meet or exceed AAMA 2605 are offered in many standard choices and an unlimited number of specially designed colors.

Solvent-free powder coatings add the "green" element with high performance, durability and scratch resistance that meet the standards of AAMA 2604.

© Kawneer Company, Inc. 2011–2019
Form Number 17-2216.A
Permanodic™ is a trademark of
Kawneer Company, Inc.

Kawneer Company, Inc.
Technology Park / Atlanta

555 Guthridge Court
Norcross, GA 30092

770.449.5555
kawneer.com

KAWNEER

ARCHITECTURAL SYSTEMS | ENTRANCES + FRAMING | CURTAIN WALLS | WINDOWS