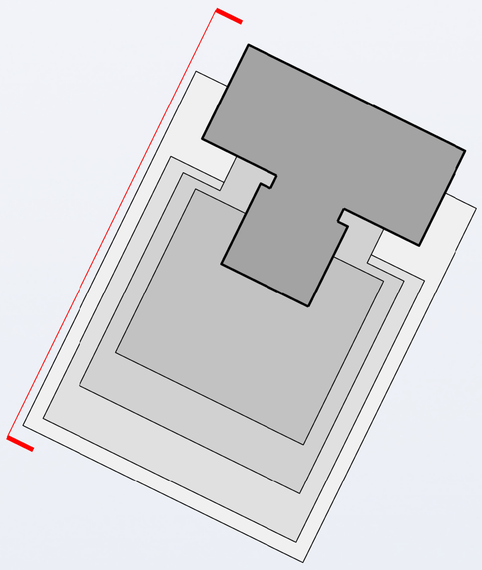

This drawing is copyright
Do not scale off dimensions.
All dimensions to be checked on site by contractor.
Contractor to report any dimensional discrepancies,
errors or omissions prior to commencing on site.

NOTE

Plans created from Plowman Craven 2D measured survey. Drawings presented have been based on these survey drawings and additional information established through historic records, historic publications and site measurements/observation; where access was available. All details and dimensions to be verified through further intrusive and measured survey and access.

Rev	Date	Description
00	24-01-2020	Planning Issue

Project Title
CIS Tower Refurbishment
Miller Street
Manchester

Status
For Planning Application

Drawing Title
General Arrangement
Proposed North West Elevation

Job No	Scale	Revision
10246	1:250 @ A1 / 1:500 @ A3	00

Drawing No
10246-SHP-Z1-NW-EL-A-B5D3-G200-001

simpsonhaugh

MANCHESTER
Riverside, 4 Commercial St
Manchester M15 4RQ
+44 (0)161 835 2345

www.simpsonhaugh.com

LONDON
5-8 Roberts Place
London EC1R 0BB
+44 (0)20 7549 4000

mail@simpsonhaugh.com

© SimpsonHaugh 2017