GypWall CLASSIC

1 2 layers Gyproc plasterboard fixed with British Gypsum Drywall Screws at 300mm centres (200mm centres at external angles)
2 Gypframe 48 S 50 'C' studs at 600mm centres
3 Isover insulation where required
4 Gypframe 50 FEC 50 Channel suitably fixed to floor/soffit at 600mm centres
5 Gyproc Sealant for optimum sound insulation
6 Gyproc jointing material bulk fill where gap exceeds 5mm
7 Indicative skirting
8 Gypframe GFS1 Fixing Strap to support outer layer horizontal board joints
9 Gypframe Steel Angle or timber batten suitably fixed to soffit
10 Gypframe 48 S 50 'C' stud suitably fixed to wall at 600mm centres

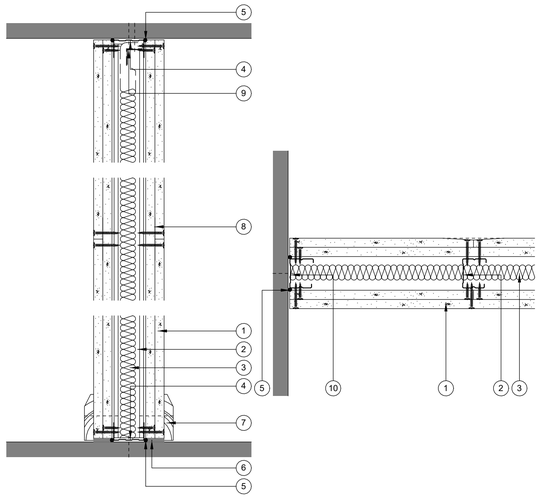

Base, Head & Horizontal Board Joint

Wall Abutment

Rev. A Feb 19 General update (MRC)

GypWall CLASSIC
TYPICAL DETAILS READ WITH PROJECT SPECIFICATION

1:5 Jan 13 MRC DRM TY-101-11L2-01 A

1 Type 03 - 01
1 : 5

GypWall CLASSIC

1 2 layers Gyproc plasterboard fixed with British Gypsum Drywall Screws at 300mm centres (200mm centres at external angles)
2 Gypframe 48 S 50 'C' studs at 600mm centres
3 Isover insulation where required
4 Gypframe 48 S 50 'C' stud fixed through plasterboard to stud with British Gypsum Drywall Screws at 600mm centres
5 Gypframe GA6 Splayed Angle to receive outer layer board fixings
6 Minimum angle ensures Gypframe GA6 Splayed Angle is fixed to studs at external angle

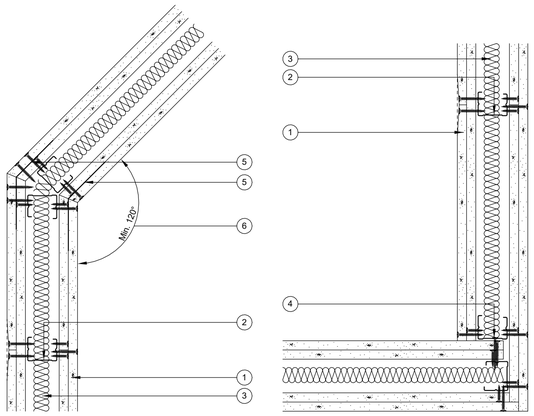

Splayed Angle

Corner

Rev. A Feb 19 General update (MRC)

GypWall CLASSIC
TYPICAL DETAILS READ WITH PROJECT SPECIFICATION

1:5 Jan 13 MRC DRM TY-101-11L2-02 A

2 Type 03 - 02
1 : 5

GypWall CLASSIC

1 2 layers Gyproc plasterboard fixed with British Gypsum Drywall Screws at 300mm centres (200mm centres at external angles)
2 Gypframe 48 S 50 'C' studs at 600mm centres
3 Isover insulation where required
4 Gypframe 48 S 50 'C' stud fixed through plasterboard to stud with British Gypsum Drywall Screws at 300mm centres in 2 lines staggered by 300mm
5 Additional Gypframe 48 S 50 'C' stud at junction

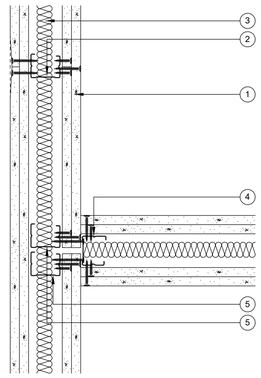

T-Junction
Optimum Acoustic Performance & Reduced Flanking Transmission

Rev. B Feb 19 General update (MRC)

GypWall CLASSIC
TYPICAL DETAILS READ WITH PROJECT SPECIFICATION

1:5 Jan 13 MRC DRM TY-101-11L2-03 B

3 Type 03 - 03
1 : 5

GypWall CLASSIC

Advice should be sought from the door manufacturer or installer prior to construction of this detail

1 2 layers Gyproc plasterboard fixed with British Gypsum Drywall Screws at 300mm centres (200mm centres at external angles)
2 Gypframe 48 S 50 'C' studs at 600mm centres to maintain stud module
3 Isover insulation where required
4 Gypframe 48 S 50 'C' stud at jamb
5 Gypframe 50 FEC 50 Channel suitably fixed to floor with 2 pairs of fixings at 150mm centres (4 total) & at 600mm centres thereafter. Channel cut & bent to extend 300mm up stud & fixed through both flanges with 2 no. British Gypsum Wafer Head Drywall Screws
6 Gypframe 50 FEC 50 Channel cut & bent to extend 150mm down stud & fixed through both flanges with 2 no. British Gypsum Wafer Head Drywall Screws or crimped
7 Indicative timber door frame & architrave
8 Stud sleeved to full opening height with Gypframe 50 FEC 50 Channel

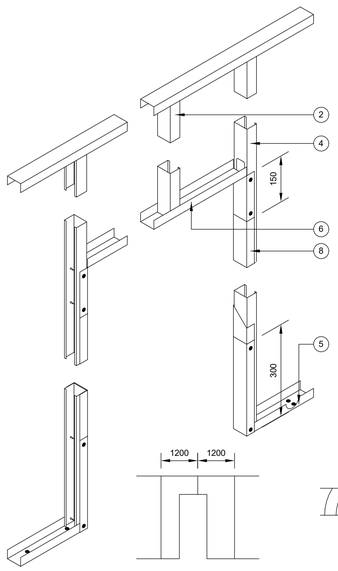

Partition Elevation

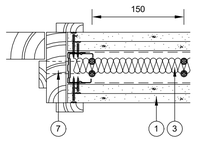

Door Opening Width up to 1200mm
Maximum Door Weight 60kg to BS 5234: Parts 1 & 2: 1992 - Heavy & Severe Duty

Rev. B Feb 19 General update (MRC)

GypWall CLASSIC
TYPICAL DETAILS READ WITH PROJECT SPECIFICATION

1:5 1:10 Jan 13 MRC DRM TY-101-11L2-04 B

4 Type 03 - 04
1 : 5

GypWall CLASSIC

1 2 layers Gyproc plasterboard fixed with British Gypsum Drywall Screws at 300mm centres (200mm centres at external angles)
2 Gypframe 48 S 50 'C' studs at 600mm centres
3 Isover insulation where required
4 Gypframe 50 DC 60 Deep Channel suitably fixed through fire stop to soffit at 600mm centres
5 Gyproc Sealant for optimum sound insulation
6 Gyproc FireStrip
7 Gypframe GFS1 Fixing Strap to receive uppermost board fixings (no fixings into head channel)
8 50mm wide strip of 19mm Gyproc CoreBoard
9 2 no. 50mm wide strips of 15mm Glasroc F FIRECASE pre-fixed to channel with British Gypsum Drywall Screws (joints staggered by 300mm)
10 Gypframe Steel Angle or timber batten suitably fixed to channel
11 Gypframe GA4 Steel Angle bedded on continuous bead of Gyproc Sealant & suitably fixed to soffit at 600mm centres (for optimum sound insulation if required by specifier or acoustic consultant)

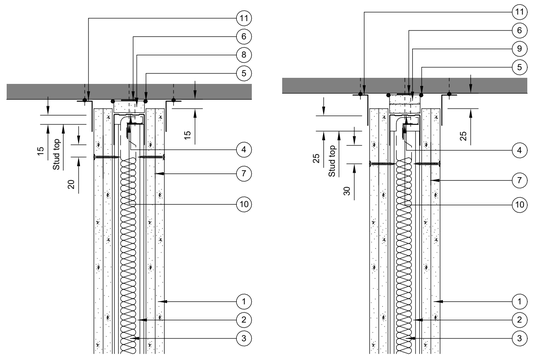

Deflection Head
15mm Downward Movement
30 or 60 Minutes Fire Resistance
BS 476: Part 22: 1987 and BS EN 1364-1: 1999

Deflection Head
25mm Downward Movement
30 or 60 Minutes Fire Resistance
BS 476: Part 22: 1987 and BS EN 1364-1: 1999

Rev. C Feb 19 General update (MRC)

GypWall CLASSIC
TYPICAL DETAILS READ WITH PROJECT SPECIFICATION

1:5 Jan 13 MRC DRM TY-101-11L2-05 C

5 Type 03 - 05
1 : 5

© COPYRIGHT
The copyright in this drawing is vested in OBI Property Ltd and no licence or assignment of any kind has been, or is, granted to any third party whether by provision of copies or originals of the drawings or otherwise unless otherwise agreed in writing.

DO NOT SCALE FROM THIS DRAWING
The contractor shall check and verify all dimensions on site and report any discrepancies in writing to OBI Property Ltd before proceeding with work.

FOR ELECTRONIC DATA ISSUE
Electronic data / drawings are issued as "read only" and should not be interrogated for measurement. All dimensions and levels should be read, only from those values stated in text, on the drawing.

AREA MEASUREMENT
The areas are approximate and can only be verified by a detailed dimensional survey of the completed building. Any decisions to be made on the basis of these predictions, whether as to project viability, pre-letting, lease agreements or the like, should include due allowance for the increases and decreases inherent in the design development and building processes. Figures relate to the likely areas of the building at the current state of the design and using the Gross External Area (GEA) / Gross Internal Area (GIA) / Nett Internal Area (NIA) method of measurement from the Code of Measuring Practice, 6th Edition (RICS Code of Practice). All areas are subject to Town Planning and Conservation Area Consent, and detailed Rights to Light analysis.

Note:
All new and replacement skirting is to closely match the historic existing skirting

Rev	Comments	Date	Rev by

Client
Oodle

Project
Express

Drawing
Partition Type 03 Typical Details

Drawing Number	First Drawn	02/09/19	Drawn by	DB	Status
26_004	Scale	1 : 5@A1	Checked by	MG	Information

OBi

80 Mosley Street, Manchester, M2 3FX.
T: 0161 237 1717 www.obiproperty.co.uk