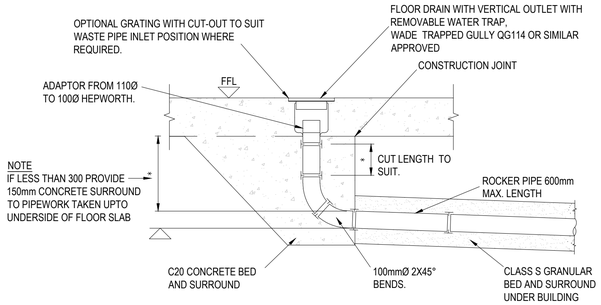

INTERNAL FLOOR DRAIN

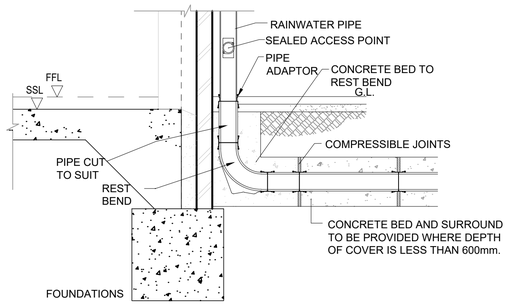

RWP CONNECTION DETAIL

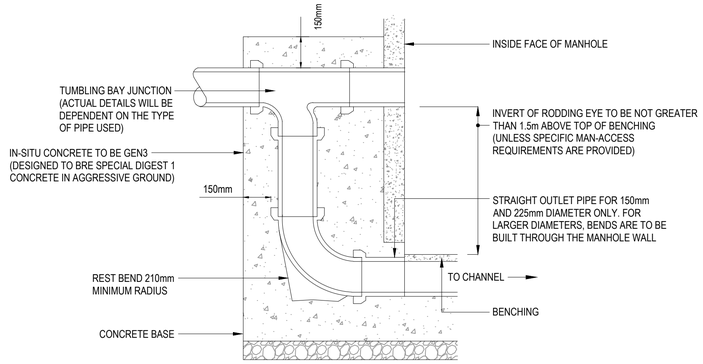

EXTERNAL VERTICAL BACKDROP

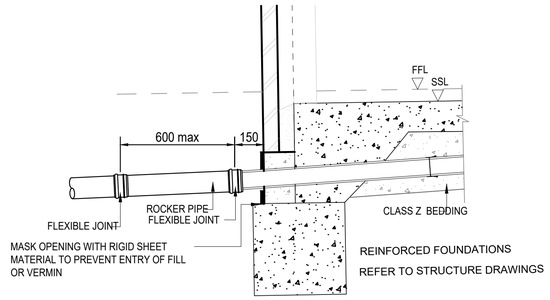

PIPES PASSING ABOVE GROUND BEAM,

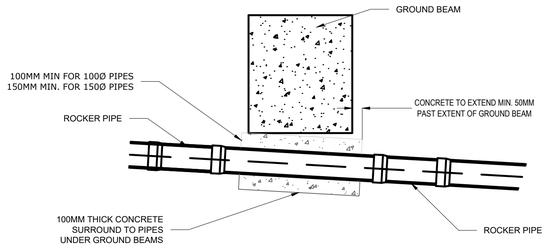

TYPICAL PIPE DETAIL UNDER GROUND BEAMS

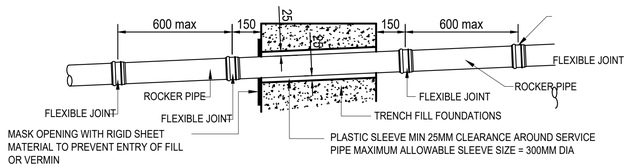

PIPES PASSING THROUGH GROUND BEAM

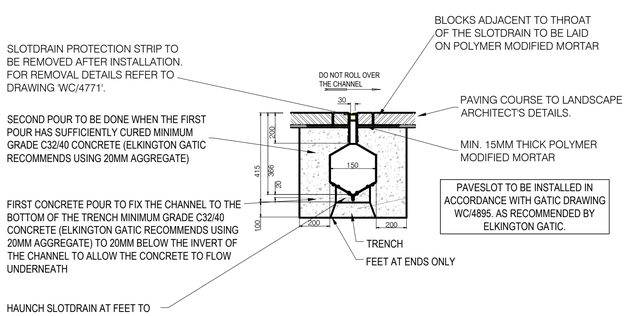

GATIC TREADSAFE 150mm CASTSLOT PAVING INSTALLATION

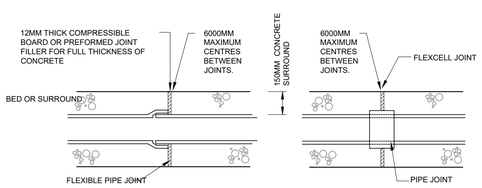

EXPANSION JOINT FOR CONCRETE BED AND SURROUND

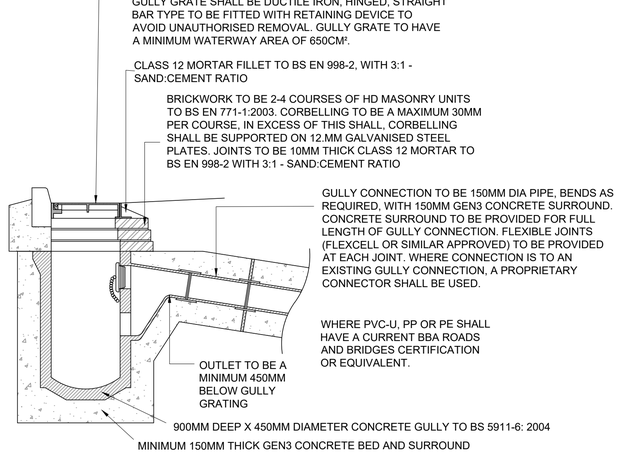

ROAD GULLY(G) DETAIL - TYPE 1

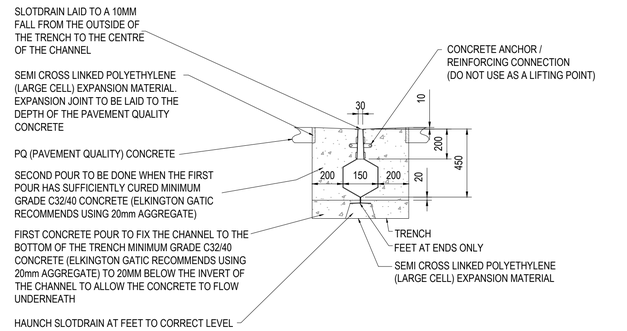

GATIC TREADESAFE SLOTDRAIN 150mm CASTSLOT CONCRETE INSTALLATION

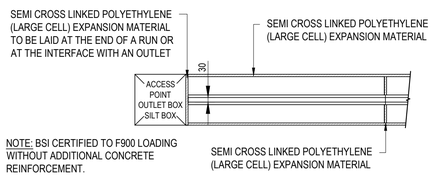

GATIC PLAN DETAIL

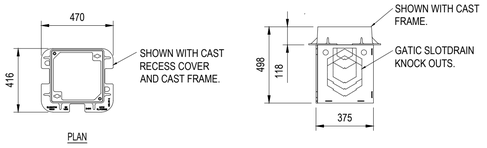

350 ACCESS BOX SECTION AND PLAN DETAILS

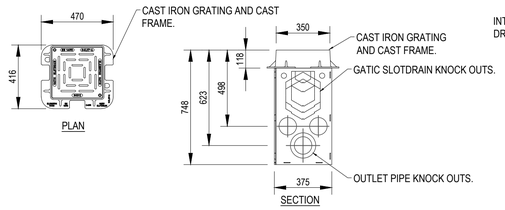

GATIC SLOTDRAIN 350mm OUTLET UNIT SECTION AND PLAN DETAILS

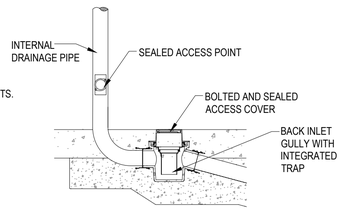

NTERNAL BACK INLET GULLY TRAP

GENERAL NOTES:

1. THIS DRAWING IS TO BE READ IN CONJUNCTION WITH ALL RELEVANT ARCHITECTS AND ENGINEERS DRAWINGS AND SPECIFICATIONS.
2. DO NOT SCALE THIS DRAWING. ANY AMBIGUITIES, OMISSIONS AND ERRORS ON DRAWINGS SHALL BE BROUGHT TO THE ENGINEERS ATTENTION IMMEDIATELY. ALL DIMENSIONS MUST BE CHECKED / VERIFIED ON SITE.
3. ALL DIMENSIONS ARE IN MILLIMETRES UNLESS NOTED OTHERWISE.

Rev:	Description:	Date:	By:	Chkd:
C01	STAGE 5	30/04/20	MW	MW

curtins
Merchant Exchange, 17-19 Whitworth Street West, Manchester, M1 5WG
0161 236 2394
manchester@curtins.com
www.curtins.com
Civils & Structures • Transport Planning • Environmental • Infrastructure • Geotechnical • Conservation & Heritage • Principal Designer
Birmingham • Bristol • Cambridge • Cardiff • Douglas • Dublin • Edinburgh • Glasgow • Kendal • Leeds • Liverpool • London • Manchester • Nottingham

Status: STAGE 5

Project: MMU INSTITUTE OF SPORT

Drg Title: DRAINAGE DETAILS SHEET 2 OF 2

Size:	Date:	Drawn By:	Designed By:	Checked By:
A1	30.04.20	MW	MW	MW

Scale: NOT TO SCALE

Project No:	Originator:	Zone:	Level:	Type:	Discipline:	Category / Number:	Rev:
1016B	CUR	00	XX	DR	C	92521	C01

\\mafs02\Projects\07001 - 07200\07185?.MMU Accommodation for Growth\04-Production\A4-Models-Drawings\CAD\92\