McDigit/2019

Digital Drive Thru Lane - Proposed Signage

ISSUE 01 - 16-10-18

This document is the property of Butterfield Signs Ltd who own the copyright therein. The information in this document is given in confidence and without the written consent of Butterfield Signs Ltd, given by contract or otherwise the document must not be copied, reprinted or reproduced in any material form either wholly or in part nor must the contents of the document or any method of technique available there from be disclosed to any third party.

Sign 1 - FG-MCD-524 - Scale 1:20
Double Digital Menu Board

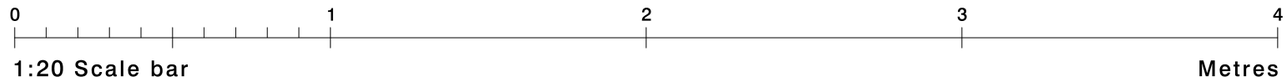

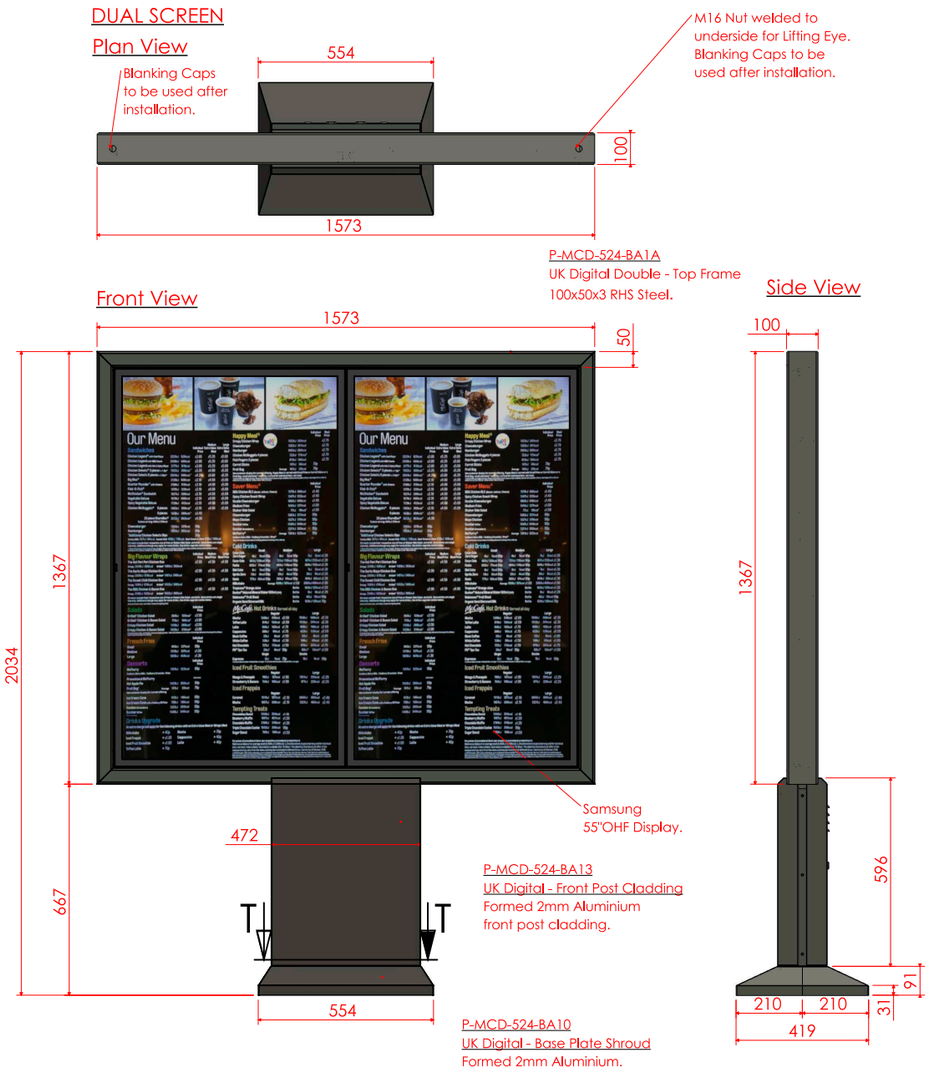

Proposed Signage

Colour reference

RAL7022 Umbra Grey with a fine textured finish.

Site	Job Number	Scale	Drawn By	Sales Rep
Digital Drive Thru Lane McDIGDT	87779A	as shown @ A3	KG	ARB
	Drawing Location	**Issue / Rev**	**Checked By**	**Date**
	M:\2018 Drawings\McDonalds\87779	2	PM	16/10/2018

BUTTERFIELD SIGNS LTD
174 Sunbridge Rd
Bradford
West Yorkshire
BD1 2RZ
Tel: 01274 722244
Fax: 01274 848996
Web: www.butterfieldsigns.co.uk

This document is the property of Butterfield Signs Ltd who own the copyright therein. The information in this document is given in confidence and without the written consent of Butterfield Signs Ltd, given by contract or otherwise the document must not be copied, reprinted or reproduced in any material form either wholly or in part nor must the contents of the document or any method of technique available there from be disclosed to any third party.

Sign 2 - FG-MCD-525 - Scale 1:20
Single Digital Menu Board

0 1 2 3 4
1:20 Scale bar — Metres

SINGLE SCREEN

Plan View

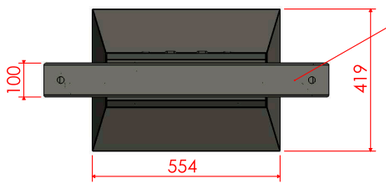

M16 Nut welded to underside for Lifting Eye. Blanking Caps to be used after installation.

Front View

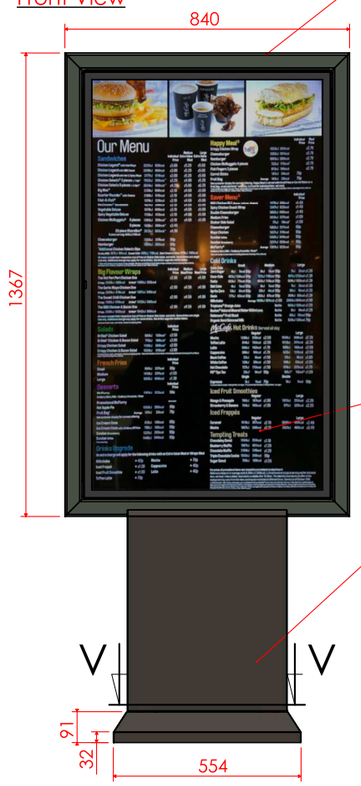

P-MCD-525-BA1A
UK Digital Single - Top Frame
100x50x3 RHS Steel.

Samsung
55"OHF Display.

P-MCD-524-BA13
UK Digital - Front Post Cladding
Formed 2mm Aluminium.

Side View

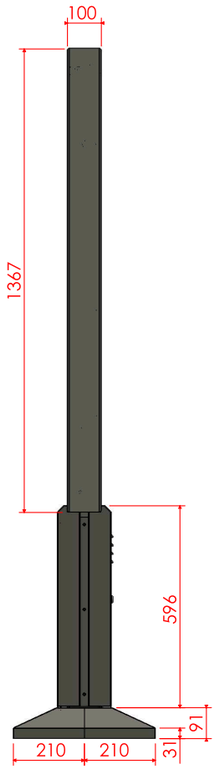

Proposed Signage

Colour reference

RAL7022 Umbra Grey with a fine textured finish.

Site	Job Number	Scale	Drawn By	Sales Rep
Digital Drive Thru Lane McDIGDT	87779A	as shown @ A3	KG	ARB
	Drawing Location	**Issue / Rev**	**Checked By**	**Date**
	M:\2018 Drawings\McDonalds\87779	2	PM	16/10/2018

BUTTERFIELD SIGNS LTD
174 Sunbridge Rd
Bradford
West Yorkshire
BD1 2RZ
Tel: 01274 722244
Fax: 01274 848996
Web: www.butterfieldsigns.co.uk

This document is the property of Butterfield Signs Ltd who own the copyright therein. The information in this document is given in confidence and without the written consent of Butterfield Signs Ltd, given by contract or otherwise the document must not be copied, reprinted or reproduced in any material form either wholly or in part nor must the contents of the document or any method of technique available there from be disclosed to any third party.

0.0 0.1 0.2 0.3 0.4 0.5m

Scale 1:10

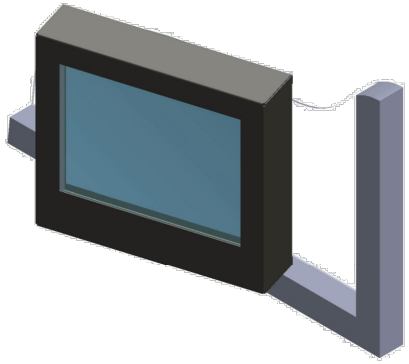

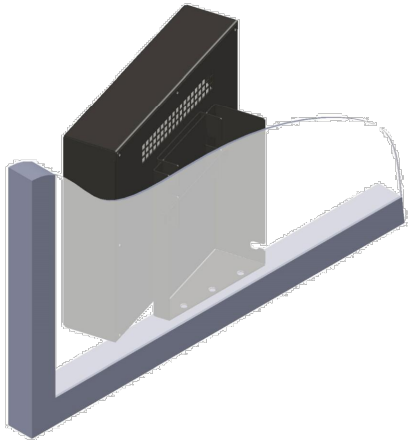

3D view (NTS)

PPC Aluminium shroud finished in RAL 7022 Grey with clear perspex front

15" LCD display screen (max. illumination 1600cd/m²)

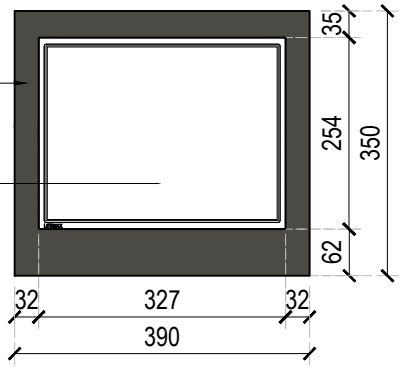

Front Elevation

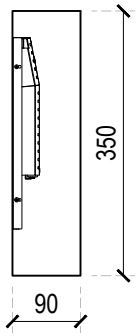

Section

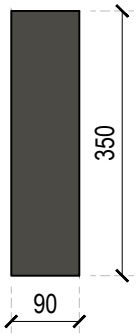

Side Elevation

Sign 3

Reconnect Screen Details
Scale 1:10

NOTES AEWTP030C

- All dimensions and levels are to be checked on site.
- Any discrepancies are to be reported to the architect before any work commences
- This drawing shall not be reproduced without express written permission from AEW.
- Title overlay drawings and ownership boundaries are produced using all reasonable endeavors. AEW cannot be responsible for the accuracy or scale discrepancy of base plans supplied to them.
- All works are to be undertaken in accordance with Building Regulations and the latest British Standards.
- All proprietary materials and products are to be used strictly in accordance with the manufacturers recommendations.

CDM 2015

Client notified of duties: **at design workshops**
Principal Designer: **TBC**

Unless noted below, all known hazards have been highlighted on the drawing:

REV	Date	Drawn by: -	Checked by: -
A	09/10/19	JJ	TSS

Annotation from the Note omitted.

Status	Purpose of Issue
S2	For Information

drawing stage **PLANNING**

client **McDonald's Restaurants Ltd**

project **Reconnect Screen**

drawing title **Proposed Reconnect Screen Details**

date	22/05/2019	drawn	RC
scale@A4	1:10	checked	EOH

Rev **A**

Job No **11358-AEW-XXXX-SK01**

aew architects
0161 214 4370
www.aewarchitects.com