Chula limited T/A 3 SINGH
575 Barlow moor road
Chorlton
Manchester, M21 8AE

Extract & Ventilation Statement

April 2020

Extraction Ventilation Statement

The Proposal are for installation of 1No extraction flue to the rear of the property.

Extraction Flue

The main elements of the grease and odour control system starts in the kitchen and will be accordance with the following:

Kitchen Canopy Extraction Requirements

The canopy is as existing and contains primary grease filters and all cooking equipment is below the canopy primary grease filters are cleaned every 2 – 3 days.
The extraction system has been designed to ensure that the velocity of gases through these filters enables sufficient residence time this system has been designed to have 0.4s residence time.

Panel Pre Filter

This filter will be installed in the ductwork within the filter housing this will be a disposable pleated panel filter located within the ductwork. The filter will be in-line but prior to the odour control/filtration, in the same filtration housing. The secondary filter shall be replaced every 3 months, however this could be done earlier depending on the volume of cooking.

Odour Control Filtration (Carbon Filter)

Activated carbon filters will be installed after the secondary filter.
Activated-carbon filters absorbs gaseous odours, usually volatile organic compounds, onto the filter medium. The carbon filter will have a dwell time of 0.4s. there will be 2No Carbon filters installed will be checked every 3 months prior to replacement.
The carbon filtration will be located at a sufficient distance along the duct run, to prevent the heat from the cooking reducing the efficiency of the filtration. The filter housing has been designed to ensure ease of access for maintenance and to provide a good seal around the filters to prevent gases bypassing the filters, rendering them ineffective.
The internal surfaces of the filter housing shall be cleaned monthly.
The gaseous flow rates, through the filters, shall be matched to the respective retention time of each filter to achieve optimum efficiency of the filters. It is critical to achieve optimum efficiency to effectively remove grease and odour and to prevent breakthrough of grease and odour, by too great a flow.

Extraction Motor / Fan

The extraction motor has been correctly rated for the application and at the correct speed/flow rate to achieve optimum performance of the filtration. The extract fan shall be mounted on Anti – Vibration component and the extraction motor will be cleaned and maintained in accordance with the manufactures specifications. The motor controller shall be located in the kitchen and be of, two

speed or variable speed design, adjusted so that the speed settings correlate to and achieve the optimum flow rates of the odour control system.

Noise Control / Attenuator

Noise control shall be implemented; attenuator will be installed after fan installation as per schematic. The attenuation will be of pod type supplied by London Fans.

Noise Level Assessment

British Standard 8233:1999 'Sound insulation and noise reduction for buildings – Code of Practice' gives recommendations for acceptable internal noise levels in residential properties. Assuming worst case conditions, of the closest window being for a bedroom, BS8233:1999 recommends 30-35dB(A) as being 'Good' to 'Reasonable' internal resting/sleeping conditions. With external levels of 40dB(A) at this window, the window itself would need to provide 10dB attenuation to achieve 'Good' conditions. However, according to BS8233:1999, a partially open window offers between 10-15dB attenuation.

Final Termination

The ducting shall discharge slightly above eaves level with no restriction to final opening. Duct termination has been designed to achieve a vertical efflux velocity of at least 8 metres per second (m/s).

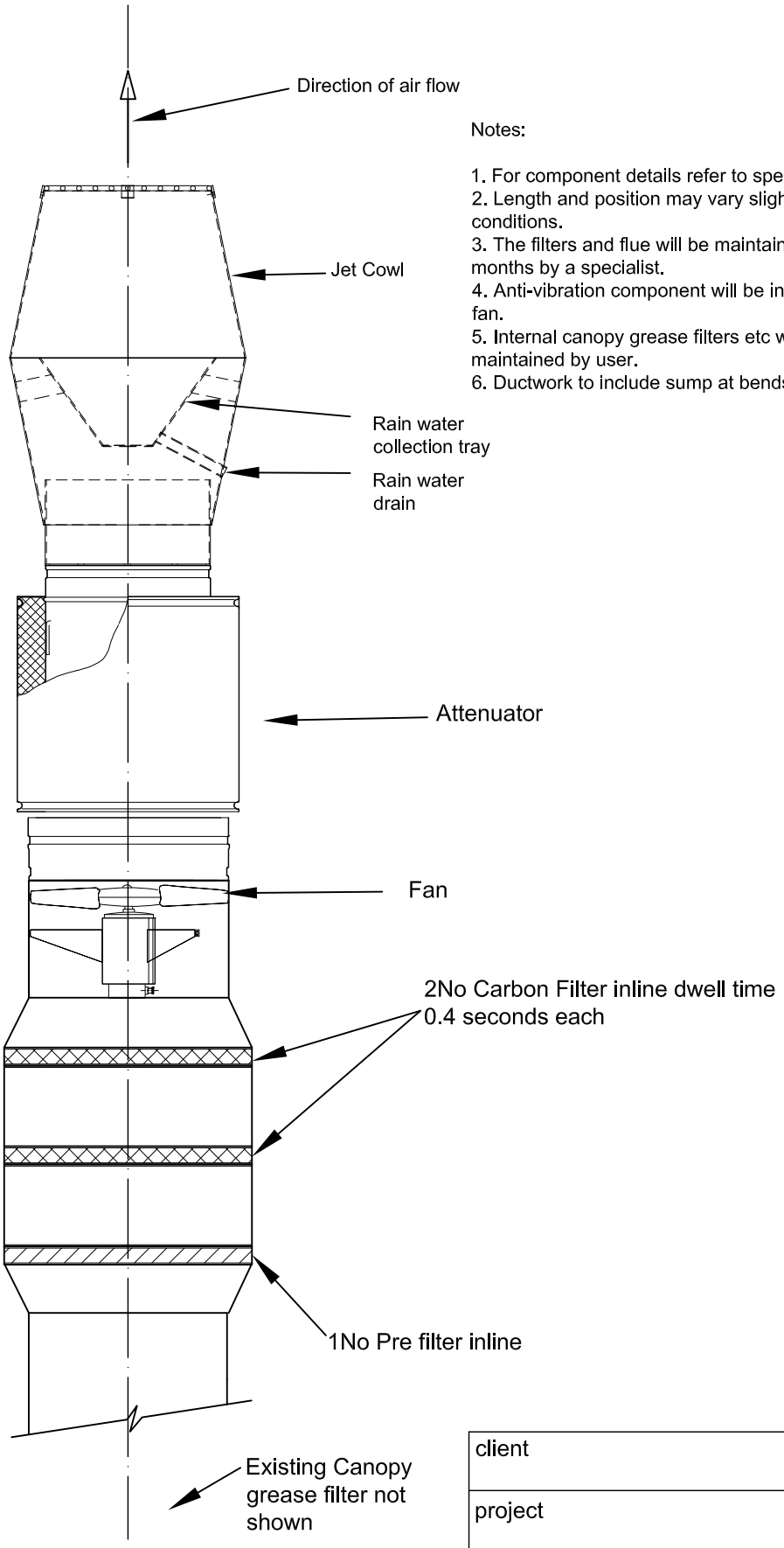

Notes:

1. For component details refer to specification.
2. Length and position may vary slightly due to site conditions.
3. The filters and flue will be maintained every 3 months by a specialist.
4. Anti-vibration component will be installed on the fan.
5. Internal canopy grease filters etc will be maintained by user.
6. Ductwork to include sump at bends

Information Only

client	
project	
title	Extraction flue component schematic

rev	amendments	scale: NTS	drawing no

Manufacturing Air Filters in the UK for Over 40 Years

V Line Pleated Panel Filter Economy Standard

JASUN ENVIROCARE PLC

General Description

The V Line pleated Panel filter is a standard capacity disposable product offering a better than basic level of filtration, or pre-filtration in HEVAC applications. This product is made using patented Kimberly Clark media which delivers a constant level of filtration over its life.

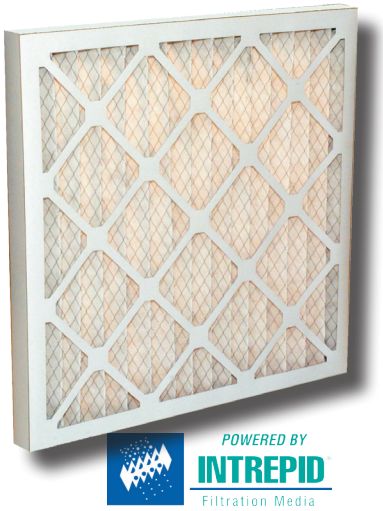

Construction

This product is constructed by bonding a pleat pack of Intrepid V Line media into a water repellent AquaKote card frame

Features

The Frame is made from AquaKote card which has

- Superior tear resistance when wet
- Great dry tear resistance and
- Manufactured from a renewable source.

Kimberley Clark Patented Intrepid Media

- Has a Graduated Density for even dirt loading , resulting in greater dust holding
- Hydrophobic – so will not load with moisture in the air
- Has a constant efficiency due to its extra electrostatic charge
- Superior Efficiency V's Particle size (see table)
- Has a low pressure drop
- Is made form continuous fibres so will not shed

Test Comparing Filtration efficiency V's different sized particles. Intrepid Media V's Cotton Polyerster Filters		
Particle Size Rang(mm)	Initial Fractional Efficiency(%)	
	V Line Intrepid	The "best" Cotton Poly Alternative
0.3-0.4	7	2
0.4-0.55	15	6
0.55-0.7	28	11
0.7-1.0	41	19
1.0-1.3	52	24
1.3-1.6	58	28
1.6-2.2	63	32
2.2-3.0	67	36
3.0-4.0	70	37
4.0-5.5	71	38
5.5-7.0	72	38
7.0-10.0	73	39

Filter Efficiency to BS EN 779		G4
Rating to ASHRAE 52.2 Test Standard		Merv 8
Filter Thickness	Rated Airflow	Initial Pressure Drop
20mm	1.5m/sec	60Pa
45mm	2.0m/sec	62Pa
95mm	2.5m/sec	80Pa
Final Recommended Pressure Drop		250Pa

Hi Magnification photo showing the cross section of the Intrepid media

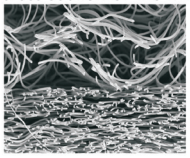

Coarse
Airflow
Fine

FM 29257
BS EN ISO 9001:2008

EMS 81914
BS EN ISO 14001:2004

Copyright © Jasun Envirocare Plc 2007-2012

Issue Date 17 September 2012 9:36 AM

V Line Panel Filter (VL) STANDARD SIZES

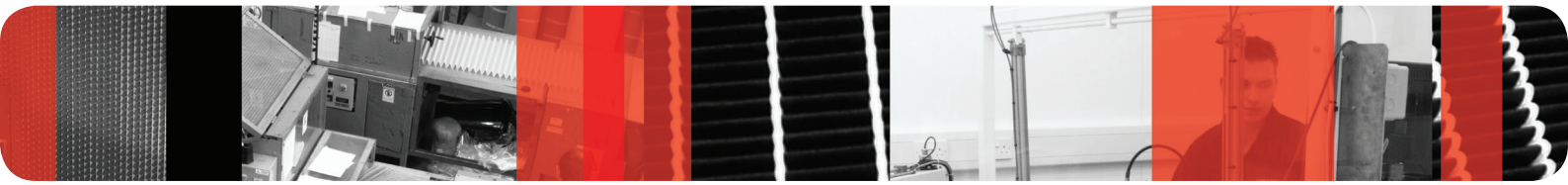

No.	Nominal Size Inches	Height (mm)	Width (mm)	Depth (mm)	Rated Airflow m³/hr
VL4-1010	10x10x4	241	241	95	544
VL4-1020	10x20x4	241	495	95	1117
VL4-1212	12x12x4	292	292	95	798
VL4-1224	12x24x4	292	594	95	1623
VL4-1515	15x15x4	368	368	95	1268
VL4-1520	15x20x4	368	495	95	1705
VL4-1616	16x16x4	394	394	95	1453
VL4-1620	16x20x4	394	495	95	1825
VL4-1625	16x25x4	394	622	95	2294
VL4-1818	18x18x4	445	445	95	1854
VL4-1831	18x31x4	445	775	95	3228
VL4-2020	20x20x4	495	495	95	2293
VL4-2024	20x24x4	495	594	95	2752
VL4-2025	20x25x4	495	622	95	2882
VL4-2424	24x24x4	594	594	95	3303

Pressure Drop vs/ Face Velocity
V Line VL4 Panel Filter 95mm Thick

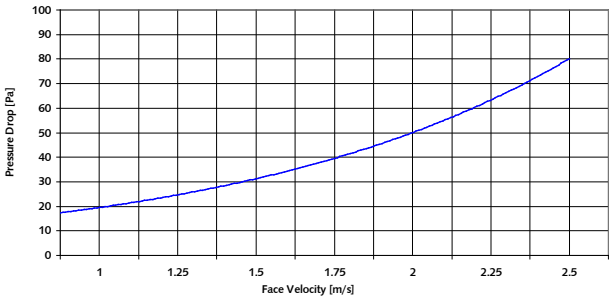

No.	Nominal Size Inches	Height (mm)	Width (mm)	Depth (mm)	Rated Airflow m³/hr
VL2-1010	10x10x2	241	241	45	418
VL2-1020	10x20x2	241	495	45	859
VL2-1212	12x12x2	292	292	45	614
VL2-1224	12x24x2	292	594	45	1249
VL2-1515	15x15x2	368	368	45	975
VL2-1520	15x20x2	368	495	45	1312
VL2-1619	16x19x2	394	470	45	1333
VL2-1620	16x20x2	394	495	45	1404
VL2-1624	16x24x2	394	594	45	1685
VL2-1625	16x25x2	394	622	45	1764
VL2-1818	18x18x2	445	445	45	1426
VL2-1820	18x20x2	445	495	45	1586
VL2-1824	18x24x2	445	594	45	1903
VL2-2020	20x20x2	495	495	45	1764
VL2-2024	20x24x2	495	594	45	2117
VL2-2025	20x25x2	495	622	45	2217
VL2-2424	24x24x2	594	594	45	2540

Pressure Drop vs/ Face Velocity
V Line VL2 Panel Filter 45mm Thick

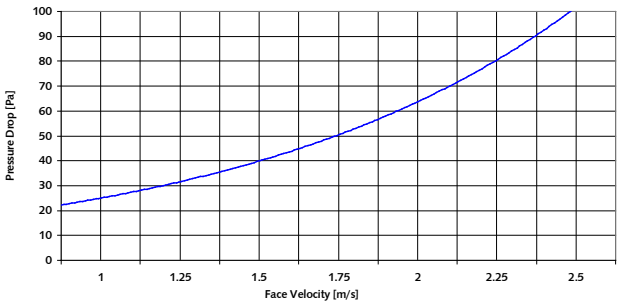

No.	Nominal Size Inches	Height (mm)	Width (mm)	Depth (mm)	Rated Airflow m³/hr
VL1-1010	10x10x1	241	241	20	314
VL1-1020	10x20x1	241	495	20	644
VL1-1212	12x12x1	292	292	20	460
VL1-1224	12x24x1	292	594	20	937
VL1-1515	15x15x1	368	368	20	731
VL1-1520	15x20x1	368	495	20	984
VL1-1619	16x19x1	394	470	20	1000
VL1-1620	16x20x1	394	495	20	1053
VL1-1624	16x24x1	394	594	20	1264
VL1-1625	16x25x1	394	622	20	1323
VL1-1818	18x18x1	445	445	20	1069
VL1-1820	18x20x1	445	495	20	1189
VL1-1824	18x24x1	445	594	20	1427
VL1-2020	20x20x1	495	495	20	1323
VL1-2024	20x24x1	495	594	20	1588
VL1-2025	20x25x1	495	622	20	1663
VL1-2424	24x24x1	594	594	20	1905

Pressure Drop vs/ Face Velocity
Vline VL1 Panel Filter 20mm Thick

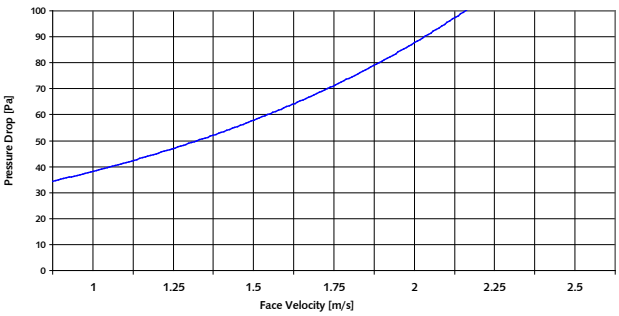

Copyright © Jasun Envirocare Plc 2007-2012

JASUN ENVIROCARE PLC
T +44 (0) 1278 452277
F +44 (0) 1278 450873
Riverside House, Parrett Way
Bridgwater TA6 5LB
www.jfilters.com

HIGH PERFORMANCE CASED AXIAL
MAXFAN COMPAC

PRODUCT FACTS

- Volumes up to 4.9m³/s
- Static Pressures up to 900 Pa (Non-stalling characteristic)
- Fans tested to ISO5801 and BS848
- High efficiency energy saving IE2 motor
- Low breakout noise levels
- Motor protection and terminal block IP55 (DW172 & Defra Compliant)
- Ambient temperatures up to 80°C (dependent on size)
- Overheat protection as standard
- Compact robust light weight construction
- Galvanised casing for high corrosion resistance
- Full inverter control and flexibility

ELECTRICAL SUPPLY

230v/50Hz/1 Ph (3 Ph Motor) - L Type

TEMPERATURE RANGE

Suitable for temperatures up to 80°C*
*dependent on the fan size, please refer to the specific fan technical page.

SIZES

315, 355, 400, 450, 500, 560 and 630 mm

IMPELLERS

A unique high efficiency aerofoil section blade with a smoothed hub and clamp plate offers a high efficiency solution.

Woods impellers are all high pressure die cast to offer thin aerofoil sections for low generation of noise. Every cast aluminium component is X-ray examined using Real Time Radiography inspection prior to assembly. The maximum pitch angles shown allow for speed control by frequency inverter.

MOTORS

All motors are totally enclosed air stream rated with class F insulation. Constructed from aluminium or cast iron as standard with special pad mounted fixings. Although this product incorporates a three phase electric motor, by using a matched inverter solution it is suitable for use with a single phase electrical supply on site. In addition, using a frequency inverter allows the speed to be turned down to 20% of maximum speed. Suitable for horizontal or vertical shaft operation. Supplied IP55, with removable drain plugs.

Sealed for life bearings lubricated with wide temperature range grease. The complete range of motors are fitted with Thermistor OHP as standard. Motors are IE2 efficiency class as standard.

CASING

The MaXfan Compac is available with a galvanised casing, complete with an externally mounted pre-wired electrical terminal box. Casings are spun from sheet steel with integral pre-drilled and radiused inlet flanges. The galvanised finish gives a high resistance to corrosion and is ideal for external as well as internal use.

PRODUCT CODE

40 MaXfan Compac

- 40 - denotes the fan impeller diameter in centimetres

ACCESSORIES (Pages 230-237) - **CONTROLLERS** (Pages 249-297)

Mounting Feet

Rubber AV's

Flexible Connector & Clips

0-10v Potentiometer

Silencer B1D/B2D Standard & Melinex

Matching Flange

Damper

Acoustic Jacket

Specifications are subject to alteration without notice

MAXFAN COMPAC PRODUCT PERFORMANCE & ELECTRICAL DATA

220-240V/50HZ/1ϕ L TYPE
PERFORMANCE CHART

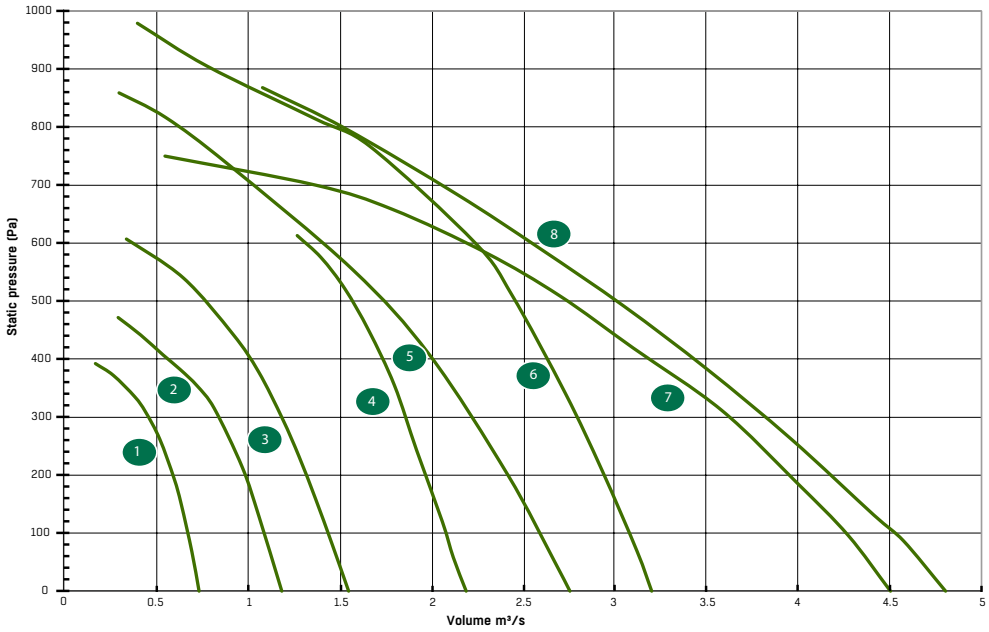

PERFORMANCE TABLE

Ref	Part Number	Fan Description	m³/s @ Pa (Static)										
			0	50	100	200	300	400	500	600	700	800	900
1	**EJ313266**	**31 MaXfan Compac**	**0.74**	**0.71**	**0.68**	**0.59**	**0.46**						
2	**EJ353266**	**35 MaXfan Compac**	**1.19**	**1.14**	**1.09**	**0.99**	**0.85**	**0.57**					
3	**EJ413456**	**40 MaXfan Compac**	**1.55**	**1.49**	**1.44**	**1.31**	**1.18**	**1.02**	**0.78**	**0.41**			
4	**EJ463266**	**45 MaXfan Compac**	**2.19**	**2.14**	**2.07**	**1.98**	**1.87**	**1.74**	**1.58**	**1.33**	**0.89**	**0.6**	**0.35**
5	**EJ513255**	**50 SC MaXfan Compac**	**2.77**	**2.67**	**2.59**	**2.42**	**2.23**	**1.99**	**1.72**	**1.4**	**1.04**	**0.61**	
6	**EJ513266**	**50 MaXfan Compac**	**3.21**	**3.15**	**3.09**	**2.97**	**2.78**	**2.64**	**2.47**	**2.25**	**2.00**	**1.48**	**0.81**
7	**EJ563236**	**56 MaXfan Compac**	**4.54**	**4.4**	**4.22**	**3.96**	**3.62**	**3.24**	**2.78**	**2.25**	**1.33**		
8	**EJ623236**	**63 MaXfan Compac**	**4.87**	**4.66**	**4.52**	**4.19**	**3.81**	**3.44**	**3.00**	**2.51**	**2.1**	**1.53**	**0.79**

PRODUCT AND ELECTRICAL TABLE

Ref	Part Number	Fan Description	Temperature (°C)	Frame	kW	Max Input Amps	FLC (A)	SC (A)	Phase	Voltage	Inverter Model	Wiring Diagram	Breakout Sound Level dB(A) @ 3m	Fan Weight (kg)	Casing Length (mm)
1	**EJ313266**	**31 MaXfan Compac**	**80**	**80**	**0.9**	**11.6**	**3.3**	**18.7**	**1**	**230**	**4.2**	**CD3042**	**45**	**33**	**375**
2	**EJ353266**	**35 MaXfan Compac**	**80**	**80**	**0.9**	**11.6**	**3.3**	**18.7**	**1**	**230**	**4.2**	**CD3042**	**45**	**33**	**375**
3	**EJ413456**	**40 MaXfan Compac**	**80**	**80**	**1.32**	**18.7**	**5.1**	**25.5**	**1**	**230**	**6.8**	**CD3042**	**40**	**35**	**375**
4	**EJ463266**	**45 MaXfan Compac**	**55**	**80**	**1.32**	**18.7**	**5.1**	**25.5**	**1**	**230**	**6.8**	**CD3042**	**43**	**37**	**375**
5	**EJ513255**	**50 SC MaXfan Compac**	**65**	**80**	**1.73**	**18.7**	**6.3**	**35.5**	**1**	**230**	**6.8**	**CD3042**	**49**	**32**	**375**
6	**EJ513266**	**50 MaXfan Compac**	**65**	**90**	**2.64**	**26.4**	**9.4**	**52.8**	**1**	**230**	**9.6**	**CD3042**	**48**	**51**	**520**
7	**EJ563236**	**56 MaXfan Compac**	**70**	**90**	**2.64**	**26.4**	**9.4**	**52.8**	**1**	**230**	**9.6**	**CD3042**	**48**	**55**	**520**
8	**EJ623236**	**63 MaXfan Compac**	**55**	**90**	**2.64**	**26.4**	**9.4**	**52.8**	**1**	**230**	**9.6**	**CD3042**	**50**	**61**	**520**

For ErP efficiency ratings and grades please refer to our Fan Selector for more information. For speed controllers please see pages 250-297.

Sound pressure levels quoted are at the inlet, and are average dBA at 3m distance over a sphere at the mid point at the highest angle given, under free field conditions. These are presented for comparative purposes only.

Products in **bold** are available from our UK Distributors on next day delivery, if ordered by 4pm. Please call to confirm availability on 01206 222 580.

Specifications are subject to alteration without notice

SOUND DATA - MAXFAN COMPAC

Fan Description	Ps Sound data at	Pa Static		Sound Spectrum (Hz)								Overall	
				63	125	250	500	1k	2k	4k	8k	Lw*	LpA @ 3m**
31 MaXfan Compac	0.53 m3/s	252	Inlet*	81	79	80	82	80	76	71	66	88	63
31 MaXfan Compac	0.53 m3/s	252	Outlet*	83	80	81	82	80	77	72	67	89	64
31 MaXfan Compac	0.53 m3/s	252	Breakout*	73	68	64	66	61	53	51	47	75	45
35 MaXfan Compac	0.84 m3/s	302	Inlet*	82	80	84	83	80	77	73	69	89	65
35 MaXfan Compac	0.84 m3/s	302	Outlet*	83	80	85	84	81	78	74	69	90	65
35 MaXfan Compac	0.84 m3/s	302	Breakout*	74	68	68	67	60	54	53	51	76	47
40 MaXfan Compac	1.32 m3/s	200	Inlet*	75	76	82	79	78	77	74	70	86	63
40 MaXfan Compac	1.32 m3/s	200	Outlet*	77	77	85	80	79	77	75	71	88	64
40 MaXfan Compac	1.32 m3/s	200	Breakout*	67	62	65	59	53	48	50	48	70	40
45 MaXfan Compac	1.86 m3/s	300	Inlet*	78	81	88	82	80	80	78	75	91	66
45 MaXfan Compac	1.86 m3/s	300	Outlet*	79	81	88	82	81	80	79	77	91	67
45 MaXfan Compac	1.86 m3/s	300	Breakout*	69	63	66	59	56	52	57	53	72	43
50 SC MaXfan Compac	2 m3/s	400	Inlet*	81	82	89	85	87	87	83	79	95	72
50 SC MaXfan Compac	2 m3/s	400	Outlet*	81	82	91	86	87	87	85	81	96	73
50 SC MaXfan Compac	2 m3/s	400	Breakout*	71	64	69	63	62	59	63	57	75	49
50 MaXfan Compac	2.63 m3/s	400	Inlet*	83	79	87	88	86	85	81	78	94	71
50 MaXfan Compac	2.63 m3/s	400	Outlet*	85	79	90	89	86	86	81	79	95	72
50 MaXfan Compac	2.63 m3/s	400	Breakout*	75	61	68	66	61	58	59	55	77	48
56 MaXfan Compac	3.22 m3/s	400	Inlet*	86	93	88	90	88	85	79	77	97	72
56 MaXfan Compac	3.22 m3/s	400	Outlet*	87	95	89	90	88	85	80	79	98	72
56 MaXfan Compac	3.22 m3/s	400	Breakout*	77	74	63	65	63	58	61	55	79	48
63 MaXfan Compac	3.4 m3/s	400	Inlet*	85	95	93	91	87	84	83	81	99	72
63 MaXfan Compac	3.4 m3/s	400	Outlet*	86	98	94	91	87	85	84	83	100	73
63 MaXfan Compac	3.4 m3/s	400	Breakout*	76	77	68	66	62	58	65	59	80	50

*Lw dB re 10^{-12} W

**dBA re $2x10^{-5}$ Pa

DRAWING - MAXFAN COMPAC

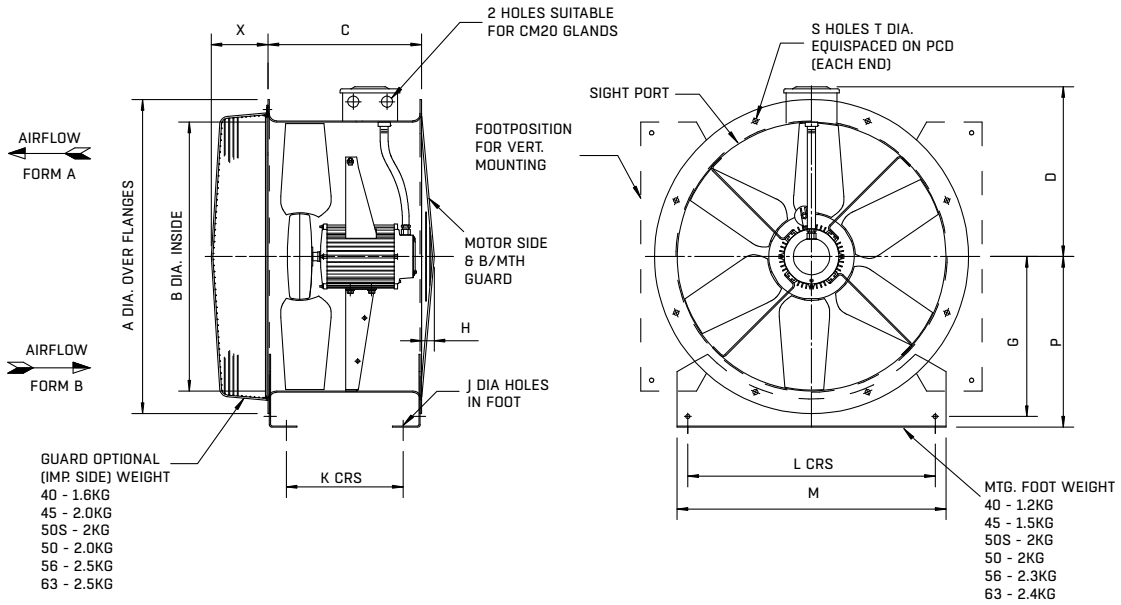

Product Code	Motor Frame	A	B	C	D	G	H	J	K	L	M	P	S	T	x	Weight (kg)
31 MaXfan Compac	80	395	315	375	229	200	30	10	285	265	315	200	8	10	137	33
35 MaXfan Compac	80	435	355	375	249	225	30	10	285	305	355	225	8	10	137	33
40 MaXfan Compac	80	480	400	375	279	225	30	10	290	350	400	250	8	12	137	35
45 MaXfan Compac	80	530	450	375	306	255	30	10	290	400	450	280	8	12	137	37
50 SC MaXfan Compac	80	594	500	375	338	290	30	10	290	450	500	315	12	12	137	32
50 MaXfan Compac	90	594	500	520	338	290	30	10	290	450	500	315	12	12	137	51
56 MaXfan Compac	90L	654	560	520	368	330	50	10	434	510	560	355	12	12	137	55
63 MaXfan Compac	90S	724	630	520	403	375	50	10	434	580	630	400	12	12	137	61

WIRING DIAGRAMS - MAXFAN COMPAC

CD3042 - MAXFAN COMPAC

Mode - On hand (Speed controlled via the up and down arrows on key pad)

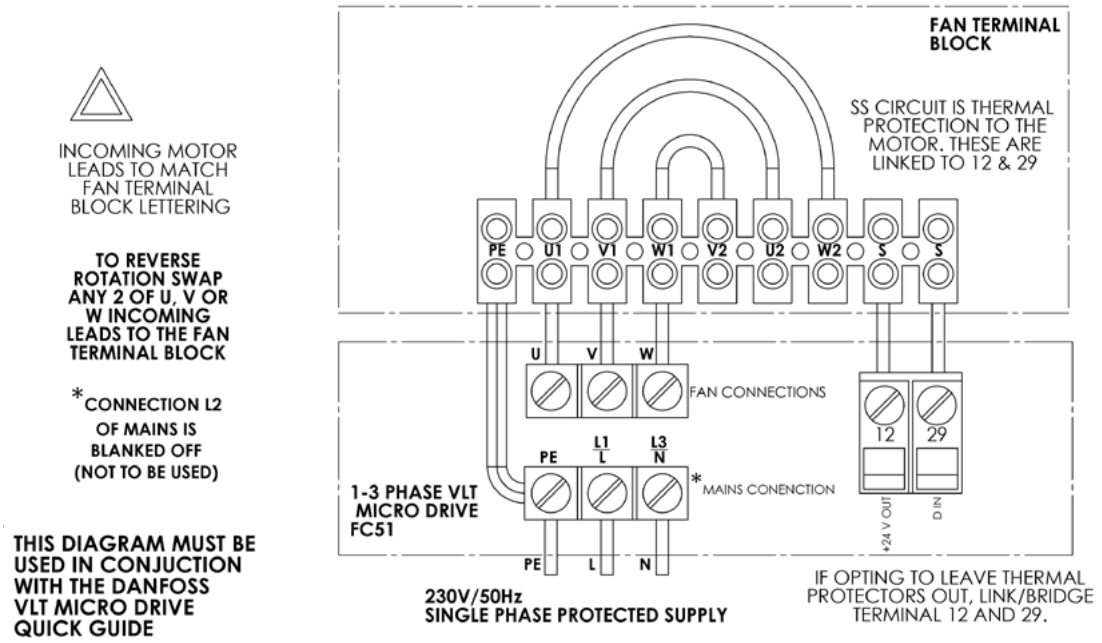

CD3043 - MAXFAN COMPAC INCLUDING POTENTIOMETER

Mode - Auto (Speed controlled via 0-10 volt potentionmeter)

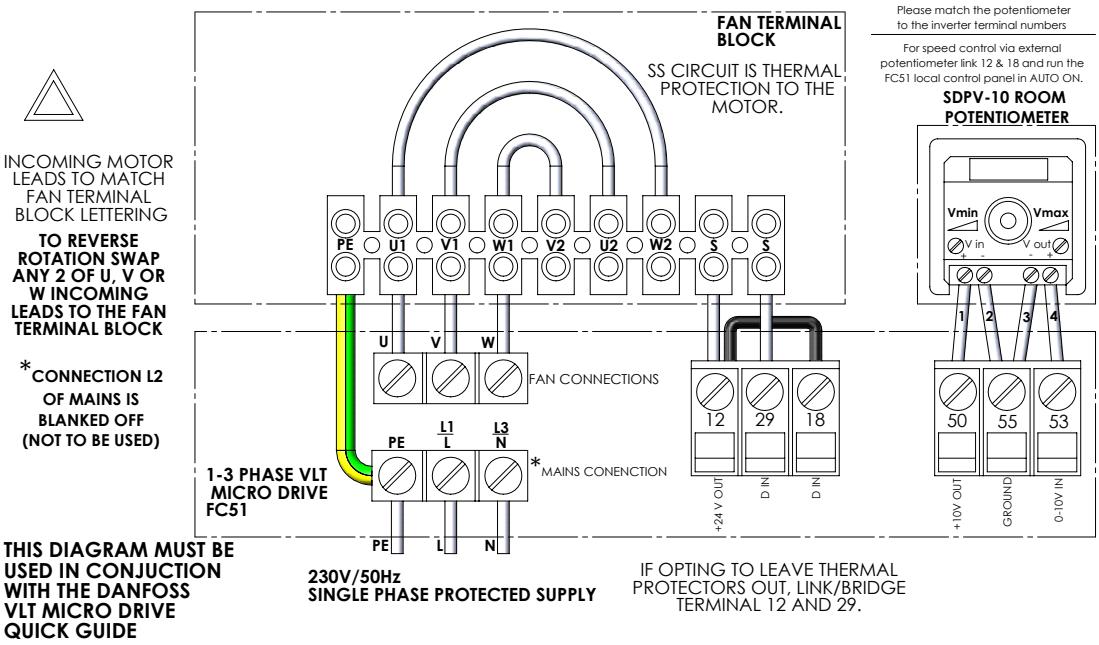

The MaXfan Compac can also be fitted using a remote switch conntected between 12 & 18

INVERTER SINGLE TO THREE PHASE

FEATURES & BENEFITS

- 1 Ph 200-240VAC to 3 Ph 200-240 VAC electrical supply
- Pre-Programmed for easy installation
- Max shielded cable length 25m
- Asynch motor speed control
- Ultra compact & light making it easy to install
- Simple to use Alpha-numeric display
- Included fitted potentiometer for manual speed adjustment
- Connectable as Modbus RTU offering control flexibility
- Built in RFI filter minimising interference
- Built-in brake functions with built in DC and AC brake functions
- 2xAI, 1xAO & 1xRO / RS485 connection options
- BMS enable/disable
- Maximum operating ambient 50ºC
- Coated PCB standard for harsh environments
- High energy efficiency

DESCRIPTION

Our inverter is a frequency converter with unsurpassed reliability, user-friendliness, condensed functionality, and extremely easy to commission. Terminal numbers are named in the same manner as in the rest of the family, making installation easy.

It converts a single phase 200-240 VAC input into a three phase output to allow the MaXfan Compac product to use a high efficiency 3Ph, 230V motor.

A safety isolator/switch disconnector should be installed on the mains side of the drive to ensure that the mains supply can be isolated for maintenance.

Please see the image below, illustrating the connections on the bottom of the inverter drive.

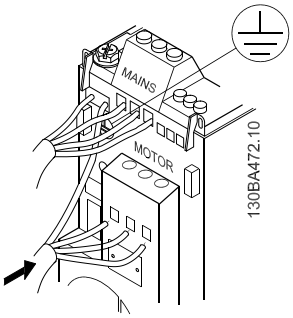

RANGE

There are three matched inverters that are specifically designed to use with our MaXfan Compac fan range. Details are shown below.

Part Number	Inverter Model	Ph.	V	Amps	kW	Enc.
PK901092	4.2	1-3	200-240V	4.2	0.75	M1
PK901090	6.8	1-3	200-240V	6.8	1.5	M2
PK901091	9.6	1-3	200-240V	9.6	2.2	M3

Step 1
Fit top cover on frequency converter.

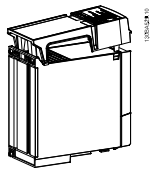

Illustration 4.14

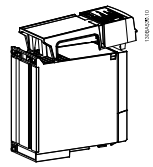

Illustration 4.15

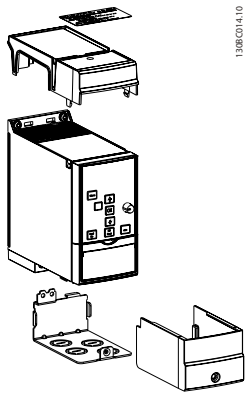

Illustration 4.16

INVERTER - QUICK INSTALLATION GUIDE

Ready – Steady – Go!

Connect motor and power cables, turn the control knob, and watch the motor speed change.

RoHS compliant
The VLT® Micro Drive does not contain lead, cadmium, hexavalent chrome, mercury, *or flame retardant PBB and PBDE.*

INVERTER - TECHNICAL & DRAWING DETAILS

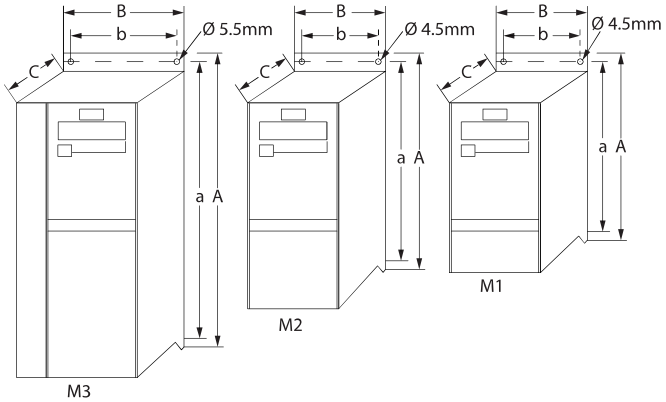

Part Number	Inverter Model	Enc.	Ph.	V	Amps	kW	Power [kW] 1x200-240 V	Height [mm] A (incl. conversion kit)	Width [mm] B	Width [mm] b	Depth [mm] C	Max. Weight kg
PK901092	**4.2**	**M1**	**1-3**	**200-240V**	**4.2**	**0.75**	**0.75**	**219.3**	**70**	**55**	**148**	**1.1**
PK901090	**6.8**	**M2**	**1-3**	**200-240V**	**6.8**	**1.5**	**1.5**	**245.6**	**78**	**59**	**144**	**1.6**
PK901091	**9.6**	**M3**	**1-3**	**200-240V**	**9.6**	**2.2**	**2.2**	**297.5**	**95**	**69**	**210**	**3**

Northern Fan Supplies Ltd
Technical Data Sheet
MaXfan Compac

FläktWoods

Quotation Number	:	Project Code	:
Project Name	:	Customer	:
Item Reference:	:	Date:	: Friday, January 31, 2020

Fan Code	56 MaXfan Compac
Fan Diameter / Size	560 Size / mm
Fan Speed	2910 rpm
Velocity	11.6 m/s
Blade Angle	16°
Installation Type / Form of Running	D / AB (Vertical)
Fan Casing	Long
Requested Duty	2.81m³/s @ 474 Pa (static)
Outlet Dynamic Pressure	81 Pa
Duty Shaft Power	2.09 kW
Max Shaft Power	2.22 kW
Total Efficiency	77.9 %
Motor Frame	90L [Class F]
Motor Rating	2.64 kW [IE2]
Full Load Current	9.36 A
Starting Current	52.8 A
Motor Mounting	Pad
Electrical Supply	220-240 Volts 50 Hz 1 Phase
Start Type	DOL
Motor Winding	Standard
Enclosure	Standard All
ErP [FMEG] Rating	N 70 (ErP Compliant)
ErP [FMEG] Target	N 58
FMEG Blade Angle [Range]	0° [0° - 0°]
Measurement Category	D (Total)
VSD	N
Fan + Motor Efficiency	66.7% (3.44 m³/s @ 467 Pa)
Motor Input Power (ErP)	2.41 kW
SFP value	0.88 W/(l/s) @ Requested Duty
Power from mains	2.51 kW
Energy Consumption	7529 kWh (3000 h/year)
Running Cost / Year	£678
Air Density	1.2 kg/m³ / 20 °C / 0 m / 50% RH
Smoke Venting	Non Smoke Venting
Product Number	EJ563236

Performance data has been derived from tests carried out in a Flakt Woods laboratory, in accordance with ISO 5801 and is specifically applicable for Ducted installations. When an electronic controller is incorporated, enhanced motor noise can occur - particularly when the operating speed is well below maximum. FWL therefore recommend using an auto transformer speed controller for noise sensitive applications. Bifurcateds are Erp exempt when used continuously at >100C. They are not for use in the EEA at lower temperatures.

The MaXfan Compac includes a preprogrammed inverter drive to operate via 1 phase supply, offering full speed control and optimised performance.

Acoustic data has been derived from tests carried out in a Flakt Woods laboratory, in accordance with BS 848 Pt 2, 1985 / BS EN ISO 5136 under Ducted conditions. The single figure provided is the overall Inlet sound pressure level at the specified distance, under spherical, free field conditions.

Acoustic figures for adjusted running speeds have been interpolated and are for reference only.

This Offer is made subject to the latest version of our A100-19 Terms and Conditions, a copy of which can be made available on request.

	Sound Spectrum (Hz)								Overall	
	63	125	250	500	1k	2k	4k	8k	Lw*	LpA @ 3 m**
Inlet*	85	92	89	91	88	85	79	77	97	73
Outlet*	86	94	90	91	89	86	80	78	98	73
Breakout*	76	73	64	66	64	59	61	54	79	49

* Lw dB re 10^{-12} W ** dBA re $2x10^{-5}$ Pa

Sound data at requested duty.

Description	Qty
Fan	
EJ563236 - 56 MaXfan Compac	1
Accessories	
Inverter	1
Thermistors	1

Unit E1 Longford Trading Estate
Thomas Street, Lancshire, M32 0JT
Tel: 0161 864-1777 Fax: 0161 864-2777

Website: www.nfan.co.uk
Email: mike@nfan.co.uk

Copyright Fläkt Group 2003 - 2019

Northern Fan Supplies Ltd
Performance Chart
MaXfan Compac

Quotation Number	:		Project Code	:
Project Name	:		Customer	:
Item Reference:	:		Date:	: Friday, January 31, 2020
			Fan Code	: 56 MaXfan Compac

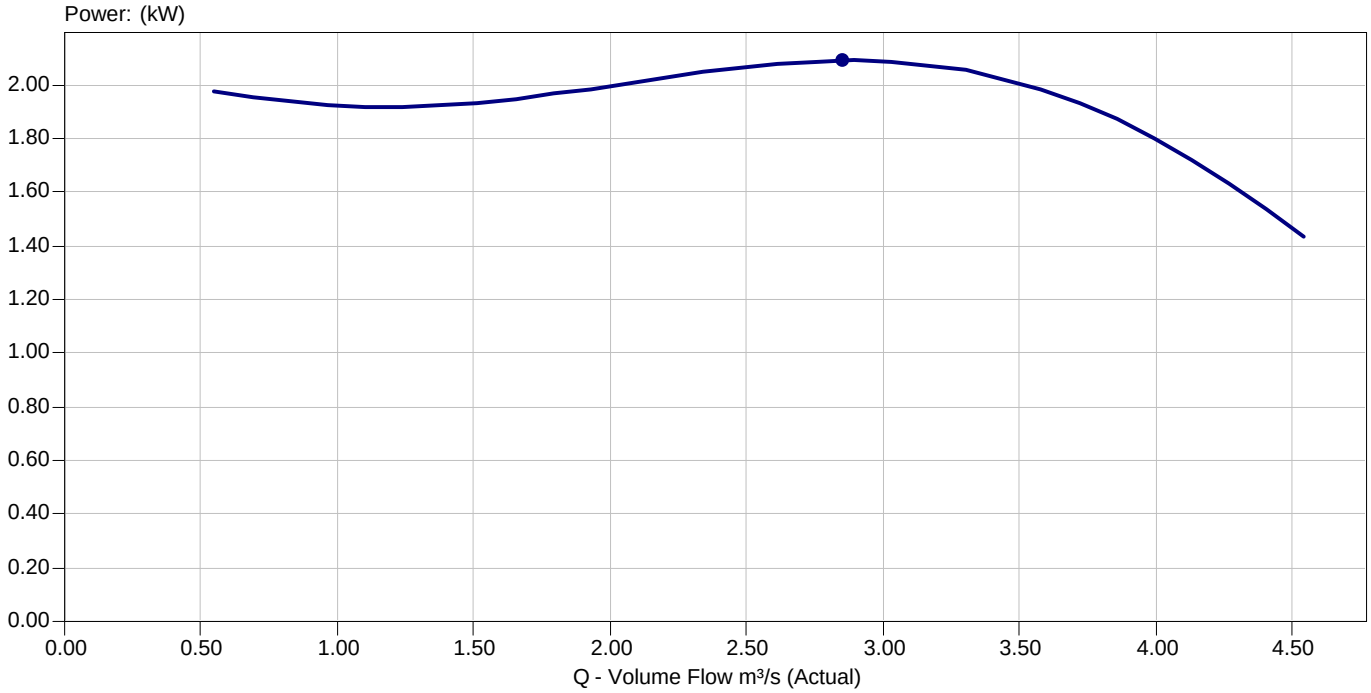

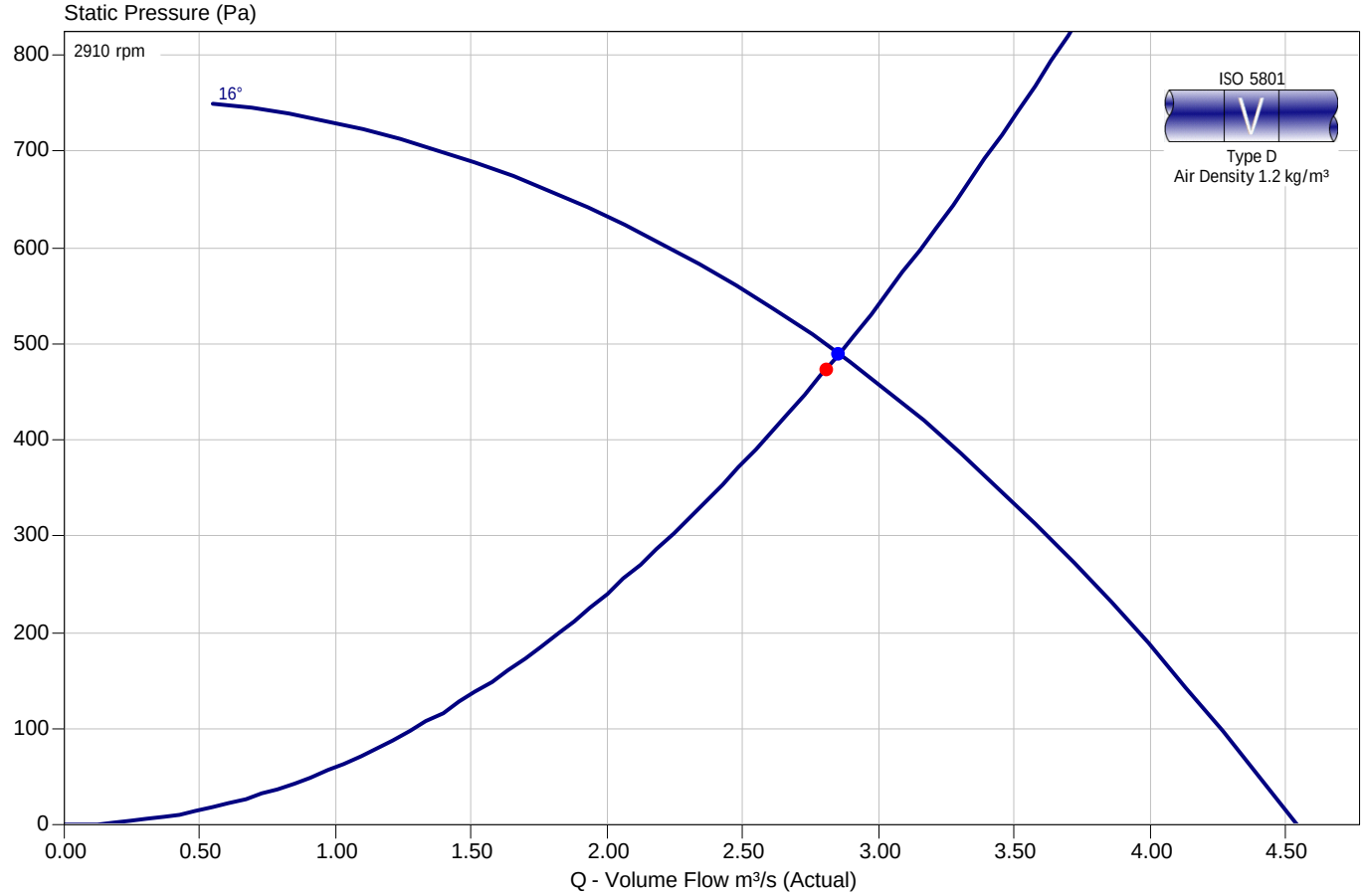

Unit E1 Longford Trading Estate
Thomas Street, Lancshire, M32 0JT
Tel: 0161 864-1777 Fax: 0161 864-2777

Website: www.nfan.co.uk
Email: mike@nfan.co.uk
Copyright Fläkt Group 2003 - 2019

Printed on 31 January 2020

Selection Engine: 3.1.3.28a

Northern Fan Supplies Ltd
Drawing and Dimensions
MaXfan Compac

FläktWoods

Quotation Number	:	Fan Code	: 56 MaXfan Compac
Project Name	:	Customer	:
Item Reference:	:	Date:	: Friday, January 31, 2020

C	520
K	424
Weight (kg)	55

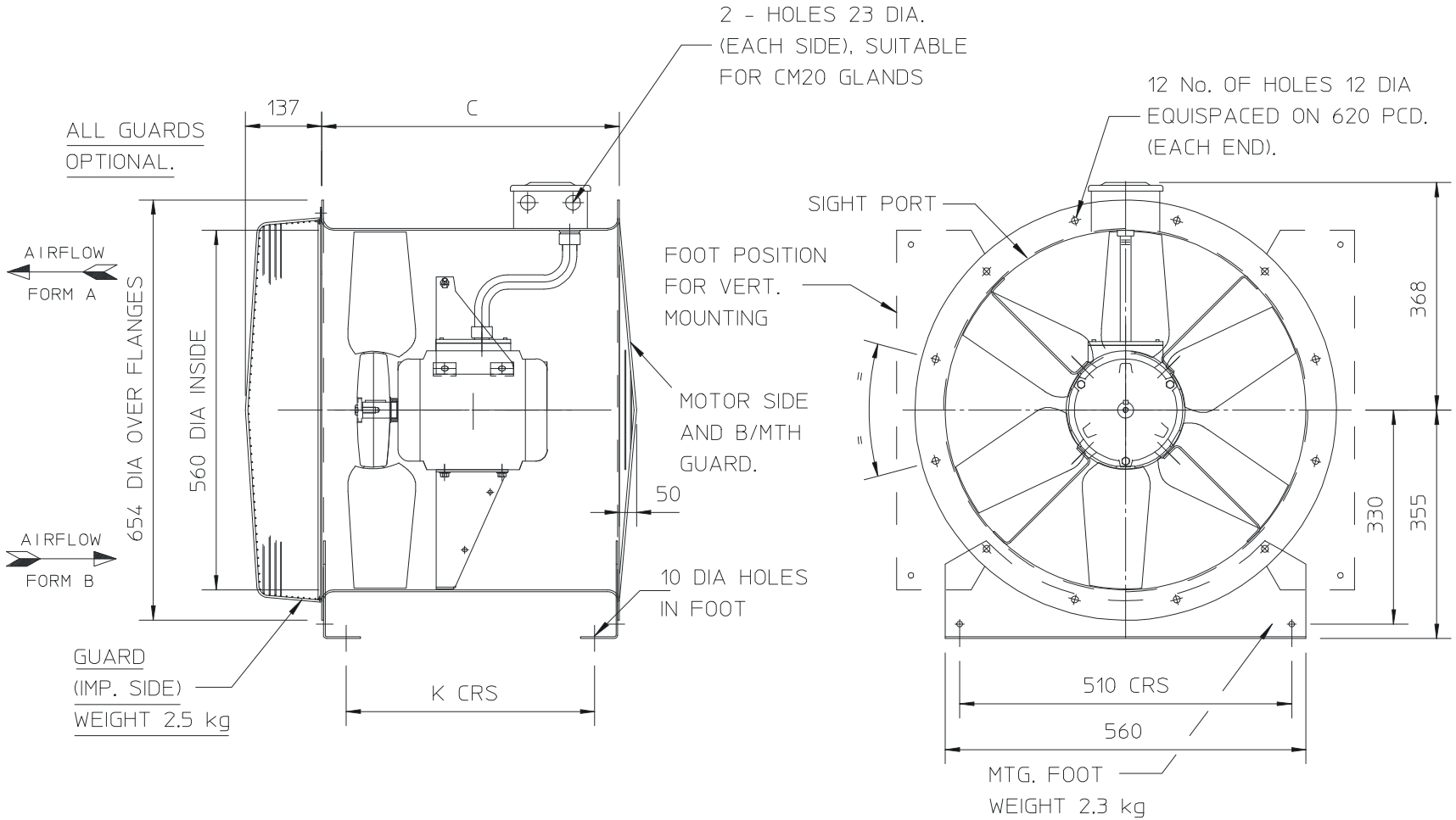

Notes : Dimensions shown in mm / Weight in kg

Reference:D275256

This drawing shows dimensions that should be used as a guide only and are subject to change. Certified drawings are available on request.

Unit E1 Longford Trading Estate
Thomas Street, Lancshire, M32 0JT
Tel: 0161 864-1777 Fax: 0161 864-2777

Website: www.nfan.co.uk
Email: mike@nfan.co.uk

Copyright Fläkt Group 2003 - 2019

AC207-2-2424

Carbon Panel 24x24x2 Grade 70% CTC

Description/Application

Carbon 208 EA - High grade carbon panel filters Grade: Minimum 70% CTC

Description

Made with a strong galvanised steel frame, our archive grade carbon filters use granules of activated carbon bonded together to form a carbon panel. Whats more, our archive grade carbon panel filters are specially treated for enhanced H25 removal. Our very own dry bonding technique allows the finished filter to maintain the characteristics of unbonded carbon and negates any possibility of settling or bowing which can happen in loose fill panels.

Application

Specification

EU Grade

207C

Efficiency (>95%)

µ (Micron)

Capacity

Rated Capacity (CFM): 336

Rated Capacity (M³/hr): 572

Resistance

Dimensions

Nominal (Inches): 24x24x2

Actual (mm): 594x594x45

Pockets:

Visual

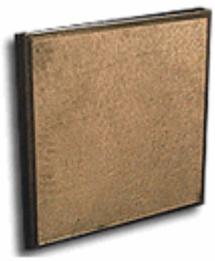

QUALITY STANDARD
FM 29257
BS EN ISO 9001:2000

JASUN FILTRATION PLC

Riverside House, Parrett Way, Colley Lane, Bridgwater, Somerset TA6 5LB
Tel: +44(0)1278 452277 Fax: +44(0)1278 450873 sales@jfilters.com www.jfilters.com

ENVIRONMENTAL STANDARD
EMS 81914
BS EN ISO 14001:1996

CASED AXIAL ACCESSORIES

SILENCER

PERFORMANCES

The performances are derived from tests to BS848. Measurements of fan noise are made with and without the silencer in position. The difference between recorded levels is the dynamic (with airflow) attenuation or insertion loss of the silencer. Type B silencers may be directly coupled to both inlet and outlet flanges of the fan. When type C silencers are directly coupled to the fan flanges they are most effective on the outlet. A spacer duct of 1D length between the fan inlet flange and a type C silencer is necessary to ensure maximum performance.

Note: C type silencers mounted close to a fan may effect the aerodynamic performance.

CONSTRUCTION

Casings are of rolled, pre-galvanised sheet steel with spun end rings incorporating tapped inserts for fixing. Suitable fixing screws are provided with all steel silencers.

The absorbent material is acoustic grade mineral fibre with an erosion resistant facing. It is protected and contained by a pre-galvanised perforated steel sheet formed to match the fan diameter.

Cylindrical silencers shall be suitable for air pressures up to a maximum of 1000 Pa. For duct pressures in excess of 1000 Pa please enquire.

A Melinex Lining (variant code M) can be supplied for critically clean applications such as hospitals to ensure no fibre migration. The lining may also be used in moisture or grease laden conditions, such as kitchen extract systems where the material is used to stop the ingress of grease etc. into the acoustic media.

The use of the lining also allows the silencers to be low pressure steam cleaned. Some reduction of attentuation due to the lining will be experienced.

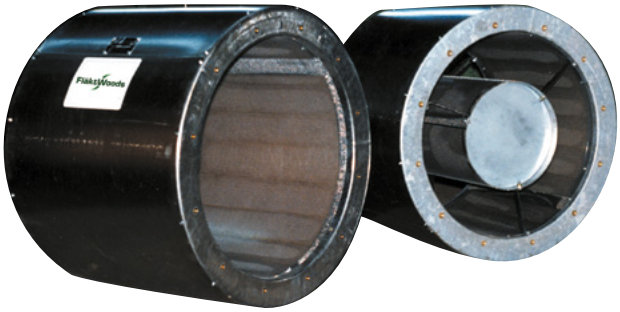

SIZE RANGE

Type B silencer bore diameters range from 280 mm to 1000 mm metric range in lengths equal to or twice the bore diameter (ID or 2D) Pressure loss for type B silencers is the same as a plain duct.

Type C silencers have a centrally mounted absorbent pod in the airway for increased attenuation. The pressure loss due to the pod is provided in Fan Selector when selecting the C type silencer as an accessory.

The diameter range is 315 mm to 1000 mm metric range.

FINISHES

Standard finish is galvanised zinc coating to BS2989 Z2. Other finishes including epoxy paint are available to special order.

TEMPERATURE RANGE

Standard silencers are suitable for temperatures from -40°C to 200°C. When moisture resistant lining is used the continuous air handling temperature is limited to 80°C. Special treatments enable silencers to operate at temperatures up to 600°C. For smoke applications, please enquire.

MOUNTING

Galvanised steel mounting feet and matching flanges corresponding to those supplied for Aerofoil fans are available.

Specifications are subject to alteration without notice

CASED AXIAL ACCESSORIES

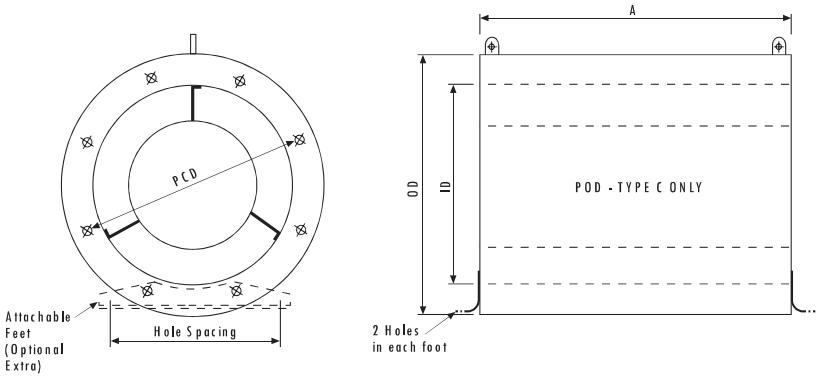

B TYPE SILENCER

Bore Dia. mm (A)	Product Number (B1D)	OD	No of holes	PCD	Thread	Mounting Foot holes		A Length		Weight (kg)	
						Dia	Spacing	1D	2D	1D	2D
315	SB211401	415	8	355	M8	10	265	315	630	10	17
355	SB221401	455	8	395	M8	10	305	355	710	12	20
400	SB241401	500	8	450	M10	10	350	400	800	15	25
450	SB251401	600	8	500	M10	10	400	450	900	20	33
500	SB271401	650	12	560	M10	10	450	500	1000	25	41
560	SB281401	710	12	620	M10	10	510	560	1120	30	50
630	SB301401	780	12	690	M10	12	580	630	1260	35	61
710	SB311401	860	16	770	M10	10	660	710	1420	44	76
800	SB331401	1000	16	860	M10	12	750	800	1600	55	96
900	SB341401	1100	16	970	M12	12	850	900	1800	70	129
1000	SB351401	1200	16	1070	M12	12	950	1000	2000	82	157

C TYPE SILENCER (PODDED)

Bore Dia. mm (A)	Product Number (C1D)	OD	No of holes	PCD	Thread	Mounting Foot holes		A Length		Weight (kg)	
						Dia	Spacing	1D	2D	1D	2D
315	SC211401	415	8	355	M8	10	265	315	630	13	19
355	SC221401	455	8	395	M8	10	305	355	710	15	24
400	SC241401	500	8	450	M10	10	350	400	800	18	30
450	SC251401	600	8	500	M10	10	400	450	900	24	39
500	SC271401	650	12	560	M10	10	450	500	1000	29	48
560	SC281401	710	12	620	M10	10	510	560	1120	35	58
630	SC301401	780	12	690	M10	12	580	630	1260	42	72
710	SC311401	860	16	770	M10	10	660	710	1420	53	90
800	SC331401	1000	16	860	M10	12	750	800	1600	66	116
900	SC341401	1100	16	970	M12	12	850	900	1800	84	150
1000	SC351401	1200	16	1070	M12	12	950	1000	2000	100	182

CASED AXIAL ACCESSORIES

SILENCER ACOUSTIC PERFORMANCE

TYPE B DYNAMIC ATTENUATION

		OCTAVE-BAND MID FREQUENCIES HZ							
BORE DIA. MM (D)	LENGTH	63	125	250	500	1K	2K	4K	8K
315	1D	1	2	4	9	11	10	9	7
	2D	1	2	5	11	16	12	11	10
355	1D	1	2	4	10	12	10	9	7
	2D	2	3	6	13	17	14	11	11
400	1D	2	3	5	10	13	11	9	8
	2D	3	4	7	14	18	15	11	12
450	1D	2	3	6	12	13	11	10	6
	2D	3	4	8	17	18	15	11	11
500	1D	2	3	6	13	14	10	10	5
	2D	3	4	8	19	18	14	11	10
550	1D	2	4	7	14	14	9	10	7
	2D	3	5	9	19	18	14	12	11
630	1D	2	5	7	15	13	8	9	8
	2D	4	6	9	19	19	14	13	12
710	1D	2	5	7	15	13	9	9	8
	2D	4	6	9	19	17	13	12	11
800	1D	2	5	8	16	12	9	9	8
	2D	4	6	10	19	15	12	11	10
900	1D	2	5	10	17	13	11	10	8
	2D	4	6	12	19	15	12	11	10
1000	1D	4	5	11	16	11	10	8	9
	2D	4	6	13	19	14	12	11	11

TYPE C DYNAMIC ATTENUATION

		OCTAVE-BAND MID FREQUENCIES HZ							
BORE DIA. MM (D)	LENGTH	63	125	250	500	1K	2K	4K	8K
315	1D	2	5	5	9	18	20	18	15
	2D	2	6	6	12	20	25	20	17
355	1D	2	5	6	9	18	22	19	16
	2D	2	6	7	13	25	27	21	17
400	1D	2	6	6	10	19	24	20	17
	2D	3	7	8	14	29	29	23	18
450	1D	2	4	7	13	20	23	22	17
	2D	2	5	9	16	29	29	21	20
500	1D	2	3	8	16	21	22	21	17
	2D	2	4	10	20	29	30	20	26
550	1D	3	5	8	16	20	18	19	15
	2D	4	5	10	20	29	28	21	23
630	1D	3	5	8	15	19	16	14	12
	2D	5	6	10	19	29	25	21	20
710	1D	3	5	8	15	19	15	14	12
	2D	5	6	10	20	26	23	18	17
800	1D	4	5	8	16	19	15	14	13
	2D	5	7	11	22	23	21	16	14
900	1D	4	5	9	17	19	15	14	13
	2D	5	7	12	24	23	21	16	15
1000	1D	5	5	11	18	19	15	14	13
	2D	5	7	13	26	24	20	16	16

All performances are derived from tests to BS848.

The above silencers give the following approximate dBA reductions: -

B Type 1 diameter length - 7 to -10 dBA C Type 1 diameter length - 12 to -15 dBA

For full acoustic details and resistance to airflow for type C please refer to fan selector.

CASED AXIAL ACCESSORIES

RUBBER IN SHEAR ANTI-VIBRATION MOUNTS

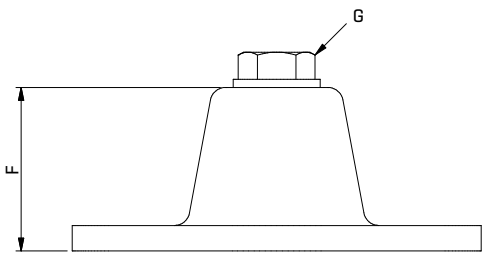

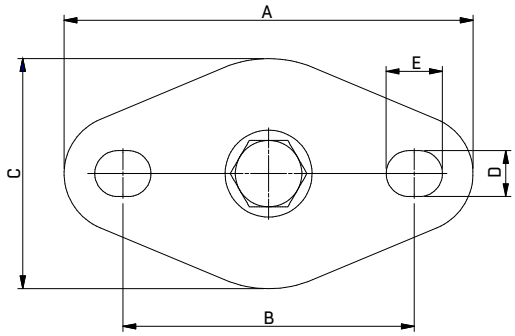

Product Code	Type	Load at 5-6mm deflection (Kg)	A	B	C	D	E	F	G
505000	**AV Rubber MP2-28 Yellow ISL**	**28**	**80**	**57**	**45**	**9**	**11**	**32**	**M8**
505001	**AV Rubber MP2-50 Blue ISL**	**50**	**80**	**57**	**45**	**9**	**11**	**32**	**M8**
505002	**AV Rubber MP2-80 Red ISL**	**80**	**80**	**57**	**45**	**9**	**11**	**32**	**M8**

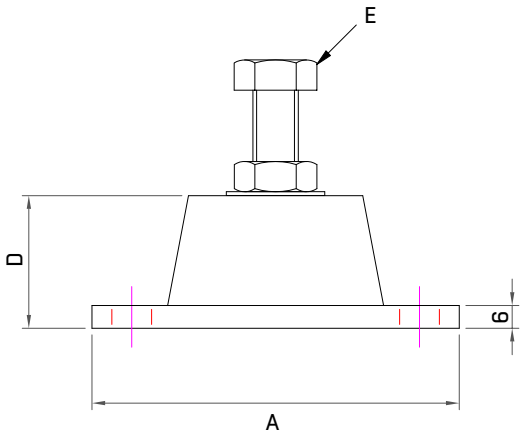

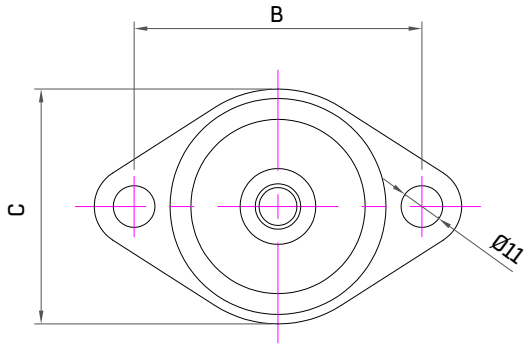

Product Code	Type	Load at 8mm deflection (Kg)	A	B	C	D	E
863893	**AV Rubber MP5-110 Yellow ISL**	**110**	**95**	**71**	**60**	**9**	**M10 x 25mm**
863894	**AV Rubber MP5-180 Blue ISL**	**180**	**95**	**71**	**60**	**9**	**M10 x 25mm**
863895	**AV Rubber MP5-280 Red ISL**	**280**	**95**	**71**	**60**	**9**	**M10 x 25mm**
863896	**AV Rubber MP6-260 Blue ISL**	**260**	**150**	**115**	**80**	**11**	**M12 x 30mm**

All dimensions in mm.

Products in **bold** are available from our UK Distributors on next day delivery, if ordered by 4pm. Please call to confirm availability on 01206 222 580.

Specifications are subject to alteration without notice

CASED AXIAL ACCESSORIES

ENCLOSED SPRING ANTI-VIBRATION MOUNTS

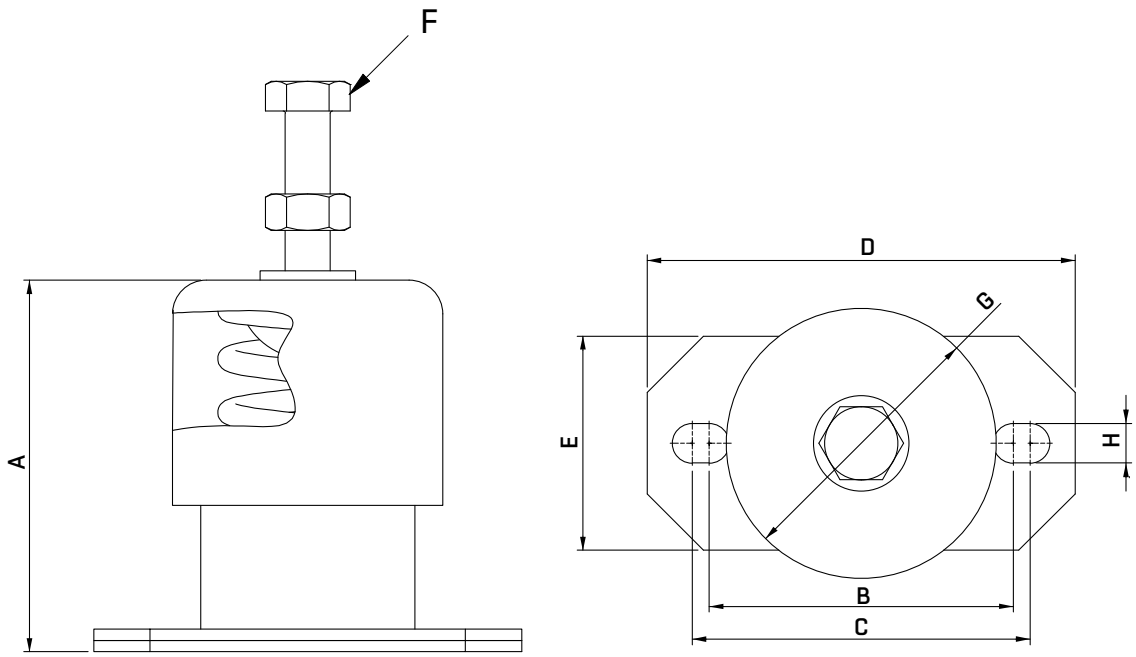

Product Code	Type	Load at 20mm deflection (Kg)	A	B	C	D	E	F	G	H
505009	MMS1-L-10 Claret ISL	10	66	54	60	76	38	M8	48	7
505010	MMS1-L-15 Yellow ISL	15	66	54	60	76	38	M8	48	7
505011	**MMS1-L-20 Grey ISL**	**20**	**66**	**54**	**60**	**76**	**38**	**M8**	**48**	**7**
505012	**MMS1-L-40 Green ISL**	**40**	**66**	**54**	**60**	**76**	**38**	**M8**	**48**	**7**
505013	MMS1-L-70 Red ISL	70	66	54	60	76	38	M8	48	7
505014	MMS1-L-100 Blue ISL	100	66	54	60	76	38	M8	48	7

Product Code	Type	Load at 25mm deflection (Kg)	A	B	C	D	E	F	G	H
505015	MMS1-30 Yellow ISL	30	96	85	90	110	70	M10	78	9
505016	**MMS1-60 Green ISL**	**60**	**96**	**85**	**90**	**110**	**70**	**M10**	**78**	**9**
505017	**MMS1-100 Blue ISL**	**100**	**96**	**85**	**90**	**110**	**70**	**M10**	**78**	**9**
505018	MMS1-160 White ISL	160	96	85	90	110	70	M10	78	9
505019	**MMS1-250 Red ISL**	**250**	**96**	**85**	**90**	**110**	**70**	**M10**	**78**	**9**

Products in **bold** are available from our UK Distributors on next day delivery, if ordered by 4pm. Please call to confirm availability on 01206 222 580.

Specifications are subject to alteration without notice

CASED AXIAL ACCESSORIES

LOUVRE SHUTTER

Suitable for fan dia. A	Product Number	A	B	C	Weight kg
315	**403715**	**250**	**300**	**395**	**1**
355	**403716**	**300**	**350**	**445**	**1.25**
400	**403717**	**350**	**400**	**495**	**1.5**
450	**403718**	**400**	**450**	**545**	**1.75**
500	**403719**	**450**	**500**	**595**	**2**
560	**410282**	**500**	**550**	**645**	**2.2**
630	**407949**	**603**	**653**	**748**	**2.4**

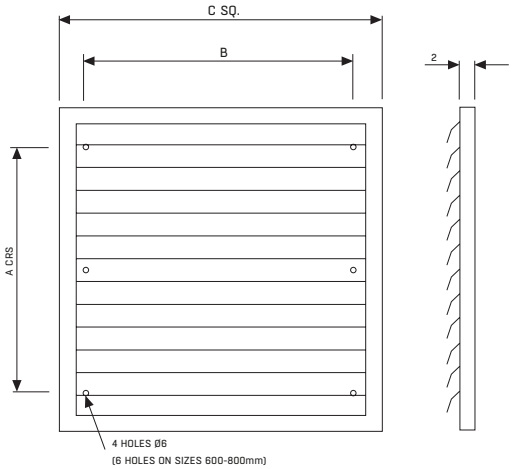

Aluminium frames, plastic shutters. Shutters must be separated from the fan mounting plane by the following minimum distances:

Up to 500 mm Ø – 150mm

560 to 630 mm Ø – 200mm

Note: that under some combinations of fan speed and wind the shutters vanes may become unstable. This is more likely to occur at reduced fan speed.

ACOUSTIC JACKETS

Diameter Size (mm)	Product Number	Type
315	860676	High Perf Acoustic Jacket 315 Dia x 375 Long (JMv)
355	**860677**	**High Perf Acoustic Jacket 355 Dia x 375 Long (JMv)**
400	860678	High Perf Acoustic Jacket 400 Dia x 375 Long (JM)
450	**860679**	**High Perf Acoustic Jacket 450 Dia x 375 Long (JM)**
450	867988	High Perf Acoustic Jacket 450 Dia x 520 Long (JM)
500	863694	High Perf Acoustic Jacket 500 Dia x 330 Long (JM)
500	867784	High Perf Acoustic Jacket 500 Dia x 375 Long (JM)
500	**858991**	**High Perf Acoustic Jacket 500 Dia x 520 Long (JM)**
500	876675	High Perf Acoustic Jacket 500 Dia x 710 Long (MaXfan²)
560	**858911**	**High Perf Acoustic Jacket 560 Dia x 520 Long (JM)**
560	876737	High Perf Acoustic Jacket 560 Dia x 654 Long (MaXfan²)
630	**858801**	**High Perf Acoustic Jacket 630 Dia x 520 Long (JM)**
630	876676	High Perf Acoustic Jacket 630 Dia x 710 Long (MaXfan²)

Our Acoustic Jackets are made to suit the metric Aerofoil Axial Flow Fan range (other fan ranges can be accommodated, for details please enquire). The effect of fitting an Acoustic Jacket to our 'L' type only is to reduce the amount of total sound breaking out from the fan casing only.

The effect of fitting an Acoustic Jacket to our 'L' type only is to reduce the amount of total sound breaking out from the fan casing only.

High performance acoustic jackets which typically achieve a 10-14dB(A) reduction in casing breakout noise.

Typical Construction suitable for indoors / outdoors.

- Grey silicone glass cloth inner and outer
- 50mm mineral wool insulation layer
- Sound barrier material
- Terminal box cut out included (if required / or if dimensions are available)
- Supplied complete with Velcro flap and straps with D rings

All dimensions in mm.

Products in **bold** are available from our UK Distributors on next day delivery, if ordered by 4pm. Please call to confirm availability on 01206 222 580.

Specifications are subject to alteration without notice