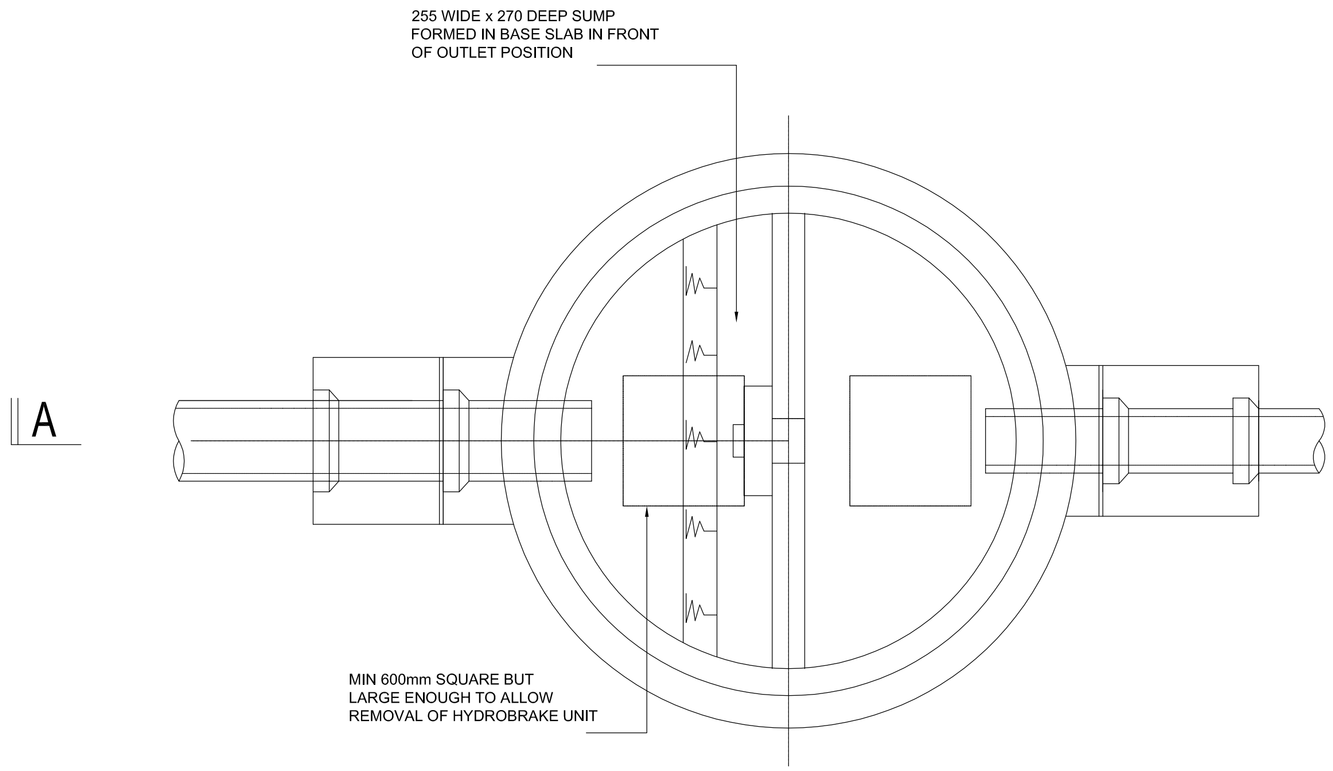

Chamber Plan-2100 Int Dia

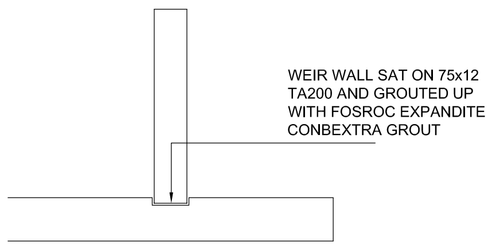

Weir Wall To Base Detail

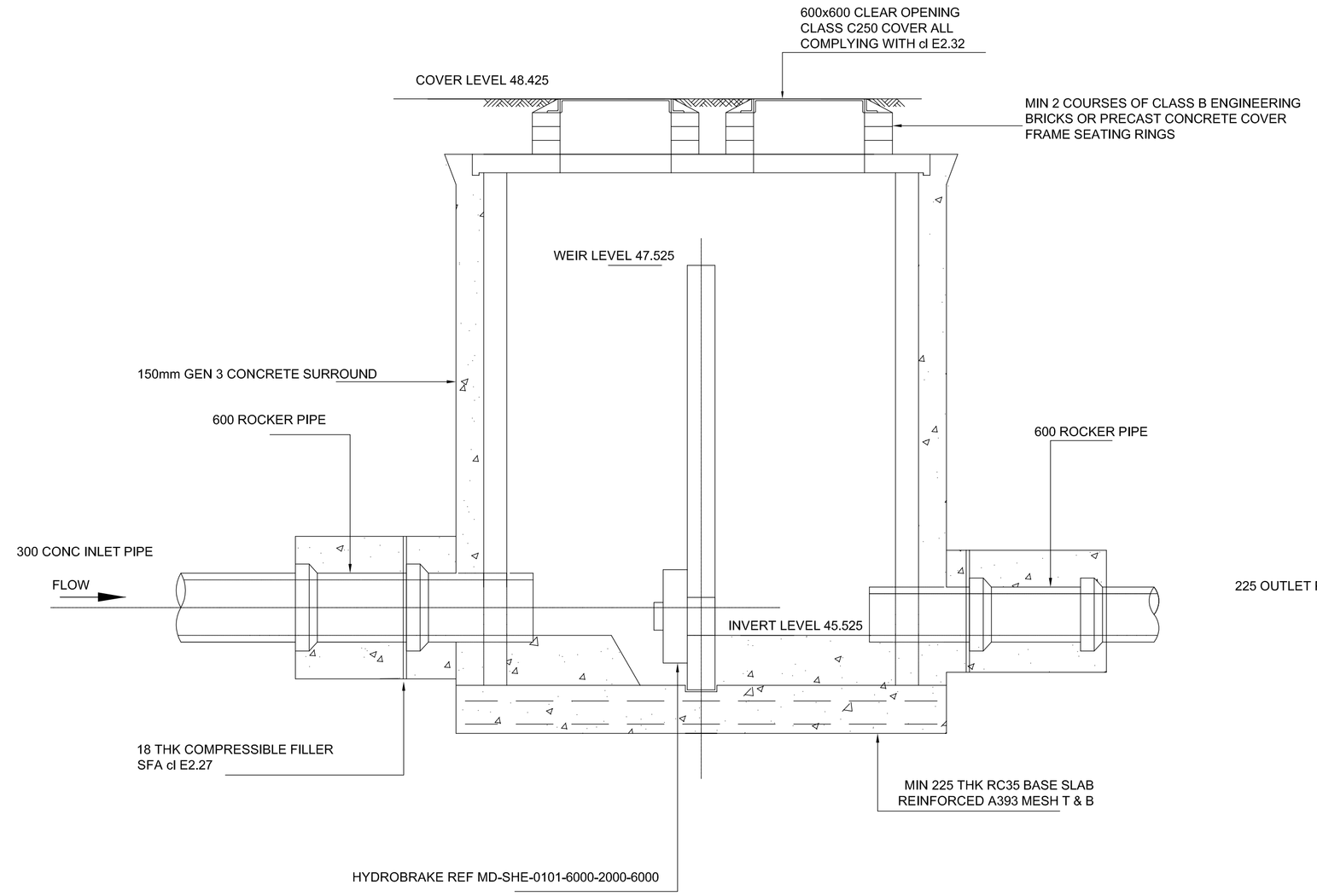

Chamber Section A-A

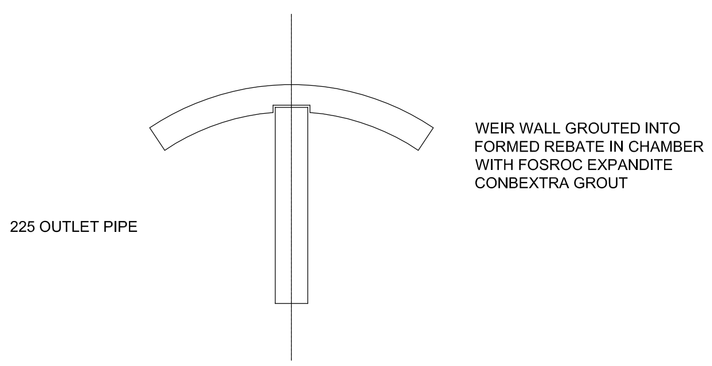

Weir Wall To Chamber Wall Detail

Manhole Chamber, Cover Slab, and Weir Wall to be constructed in Precast Conc by CPM Group

Rev	Date	Revision Description
A	30.09.2019	Tender Issue

Revision Schedule

TENDER ISSUE

Proposed Development.
328-336 Stockport Rd. Mcr.

Client:-
CS Derby Ltd.

Hydrobrake Manhole Details

BAILEY JOHNSON HAYES
Consulting Engineers
MANCHESTER : Grange House, John Dalton Street Tel 0161 279 7777 Fax 0161 236 3552
ST ALBANS : Phoenix House, 63 Campfield Road. Tel 01727 841172 Fax 01727 841085

Scale	1:20 at A1	Project Ref.	Drawing No.	Rev.
Date	09/2019	M1764	D-04	A
Dm DRN	Chkd CHK			