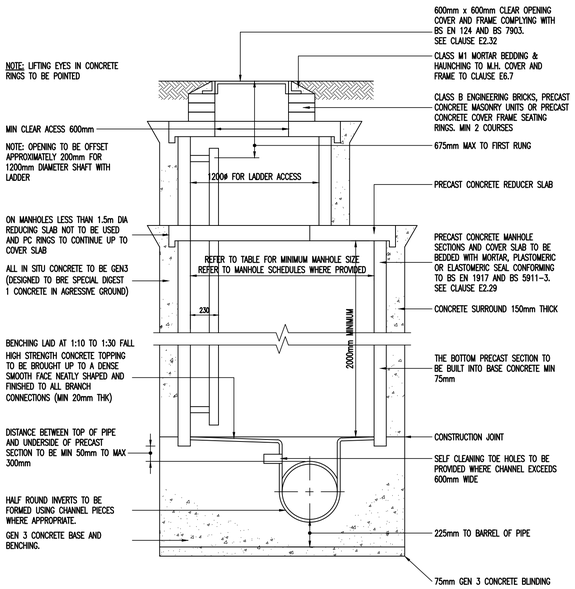

TYPICAL MANHOLE DETAIL – SFA.6 TYPE A

DEPTH FROM GROUND LEVEL TO SOFFIT OF PIPE 3m TO 6m

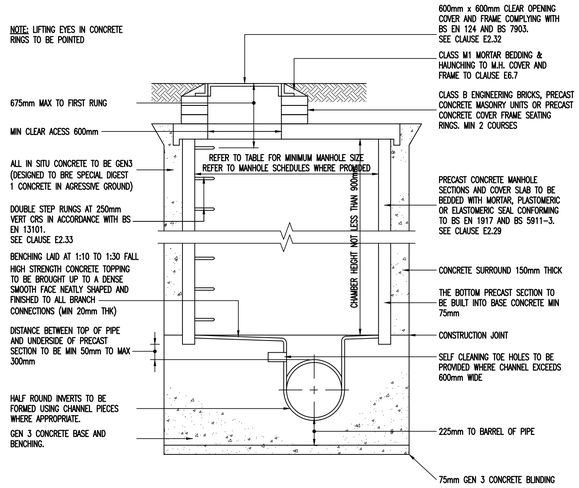

TYPICAL MANHOLE DETAIL – SFA.6 TYPE B

MAXIMUM DEPTH FROM GROUND LEVEL TO SOFFIT OF PIPE 3.0m

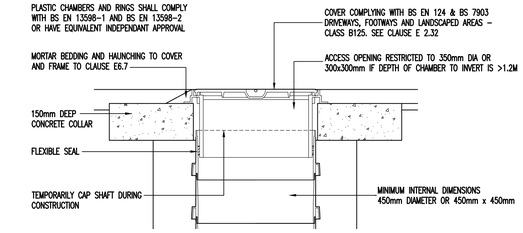

PPIC. ALTERNATIVE TOP DETAILS SITED IN DOMESTIC DRIVEWAYS OR FOOTWAYS

(N.T.S)

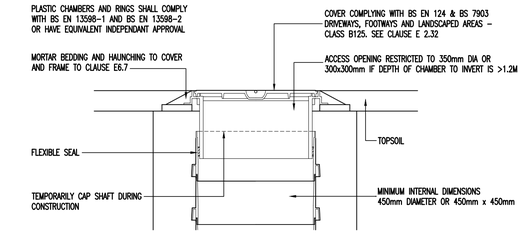

PPIC. ALTERNATIVE TOP DETAILS SITED IN DOMESTIC GARDENS

(N.T.S)

EMBEDMENT DIMENSIONS FOR RIGID PIPES					
NOMINAL INT PIPE DIA	DIMENSION Y1 EVEN TRENCH BOTTOM (MIN)	DIMENSION Y2 ROCK OR UNEVEN TRENCH BOTTOM (MIN)	PROCESSED GRANULAR MATERIAL	DIMENSION Z (MIN)	MAX PERMITTED TRENCH WIDTH
150	100	200	10MM SINGLE SIZED OR 14MM TO 5MM GRADED	100	750
225	100	200		100	825
300	100	200		100	925
375	100	200	14MM SINGLE SIZED OR 14MM TO 5MM GRADED	100	1050
450	150	200		150	1150
525	150	250		150	1200
600	150	250		150	1350
675	150	250		225	1450
750	225	300		225	1500
825	225	300		225	1600
900	225	300	20MM SINGLE SIZED OR 20MM TO 5MM GRADED	225	1900
975	225	300		300	2000
1050	225	300		300	2100
1125	225	300		300	2200
1200	250	350		300	2300
1350	375	450		375	2500
1500	375	450		375	2700
1650	375	450		450	2800
1800	375	500	40MM SINGLE SIZED OR 40MM TO 5MM GRADED	450	3100
1950	400	500		525	3200
2100	425	650		525	3400
2400	450	675		600	3700

NORMINAL INT PIPE DIA	MINIMUM INTERNAL CHAMBER DIA
LESS THAN 375	1200
375 – 450	1350
500 – 700	1500
750 – 900	1800
GREATER THAN 900	PIPE DIA + 900

NOTE:

1 ALL DIMENSIONS IN MM

2 A CONCRETE SURROUND IS REQUIRED FOR MANHOLES INSTALLED IN AREAS OF UNSTABLE GROUND, UNDER CONDITIONS OF FLOATATION OR WHERE SUBJECTED TO EXCEPTIONAL OR ECCENTRIC LOADS, IN WHICH CASE A 150mm SURROUND OF AT LEAST 20N/CU. mm CONCRETE SHOULD BE PROVIDED. ANY JOINTS SHOULD BE STAGGERED WITH THE PRECAST CONCRETE JOINTS.

3 DOUBLE STEPS SHALL BE PLASTIC ENCAPSULATED CARBON TO BS EN 1247-2 MANHOLE STEPS. STEP IRONS AT 300 CENTRES HORIZONTALLY AND VERTICALLY MAY BE USED AS AN ALTERNATIVE TO DOUBLE STEPS.

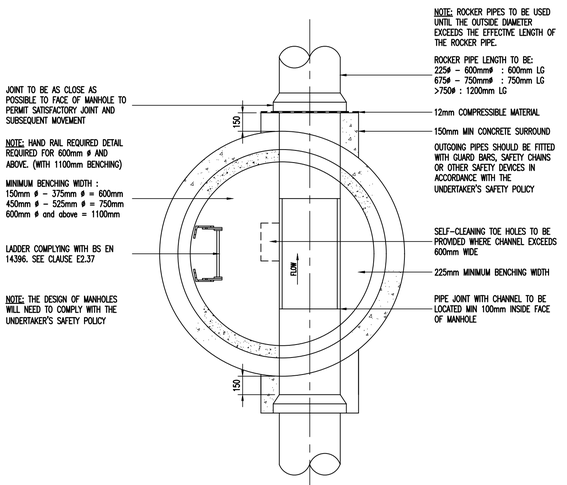

TYPICAL MANHOLE DETAIL – SFA.6 TYPE A

DEPTH FROM GROUND LEVEL TO SOFFIT OF PIPE 3m TO 6m

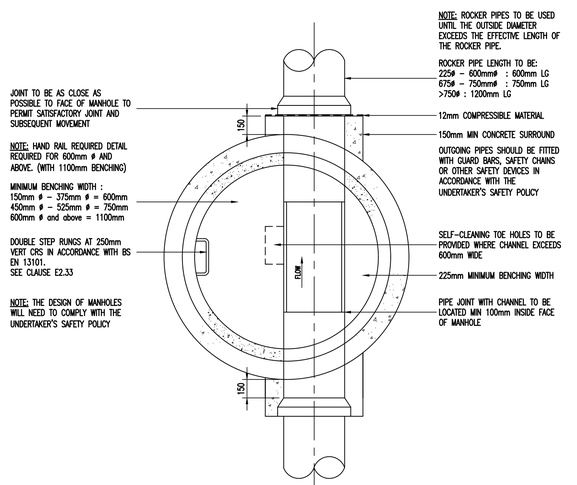

TYPICAL MANHOLE DETAIL – SFA.6 TYPE B

MAXIMUM DEPTH FROM GROUND LEVEL TO SOFFIT OF PIPE 3.0m

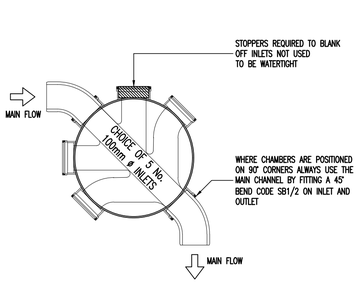

PLAN ON PPIC. INSPECTION CHAMBER

(N.T.S)

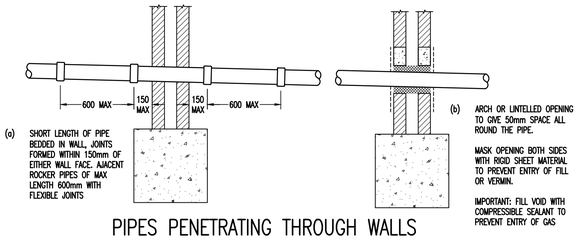

PIPES PENETRATING THROUGH WALLS

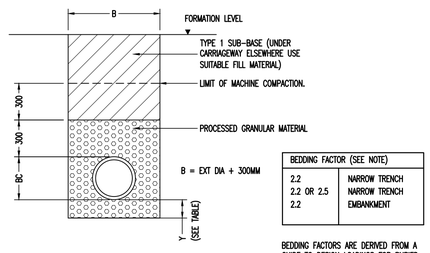

BEDDING FACTOR (SEE NOTE)	
2.2	NARROW TRENCH
2.2 OR 2.5	NARROW TRENCH
2.2	EMBANKMENT

BEDDING FACTORS ARE DERIVED FROM A GUIDE TO DESIGN LOADINGS FOR BURIED RIGID PIPES" AND IGN 4-11-02 "REVISED BEDDING FACTOR FOR VITRIFIED CLAY DRAINS AND SEWERS".

BEDDING DETAILS

(EMBEDMENT CLASS S)

MINIMUM DEPTH OF COVER TO THE CROWN OF GRAVITY PIPES WITHOUT PROTECTION SHOULD BE AS FOLLOWS:	
350mm	DOMESTIC GARDENS AND PATHWAYS WITHOUT ANY POSSIBILITY OF VEHICULAR ACCESS
500mm	DOMESTIC DRIVEWAYS, PARKING AREAS AND YARDS WITH HEIGHT RESTRICTIONS TO PREVENT ENTRY BY VEHICLES WITH A GROSS VEHICLE WEIGHT IN EXCESS OF 7.5 TONNES.
900mm	DOMESTIC DRIVEWAYS, PARKING AREAS AND NARROW STREETS WITHOUT FOOTWAYS, WITH LIMITED ACCESS FOR VEHICLES WITH A GROSS VEHICLE WEIGHT IN EXCESS OF 7.5 TONNES. AGRICULTURAL LAND AND PUBLIC OPEN SPACE
1200mm	HIGHWAYS AND PARKING AREAS WITH UNRESTRICTED ACCESS TO VEHICLES WITH A GROSS WEIGHT IN EXCESS OF 7.5 TONNES.
WHERE THE ABOVE COVER REQUIREMENTS ARE NOT MET, THE PIPE IS TO BE CONCRETE ENCASED.	

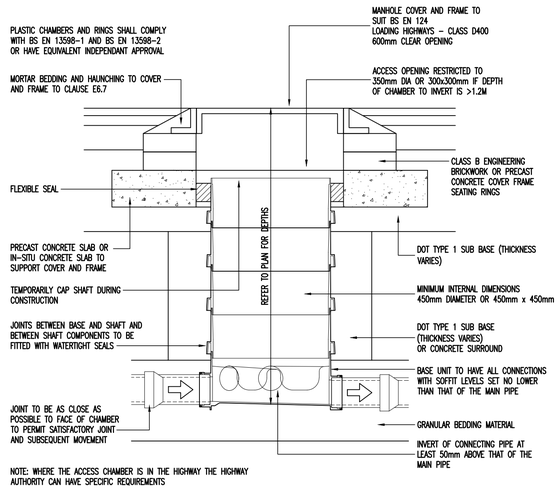

NOTE: WHERE THE ACCESS CHAMBER IS IN THE HIGHWAY THE HIGHWAY AUTHORITY CAN HAVE SPECIFIC REQUIREMENTS

SECTION THROUGH PPIC. INSPECTION CHAMBER (POLYPROPYLENE INSPECTION CHAMBER)

(N.T.S)

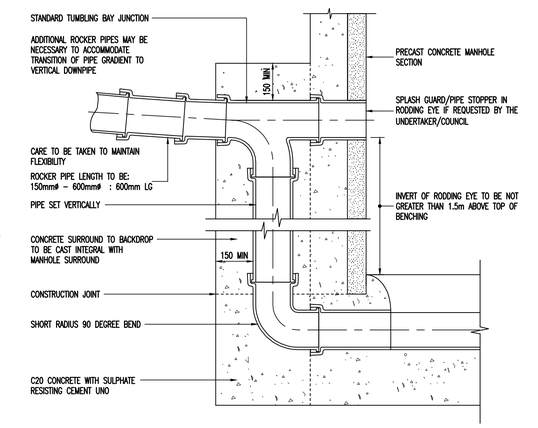

TYPICAL BACKDROP DETAIL

GENERAL NOTES

DO NOT SCALE OFF THIS DRAWING

THIS DRAWING TO READ IN CONJUNCTION WITH ALL RELEVANT STRUCTURAL AND ARCHITECTURAL DRAWINGS AND SPECIFICATIONS.

ALL DIMENSIONS TO BE CHECKED ON SITE BY THE CONTRACTOR / FABRICATOR PRIOR TO COMMENCEMENT OF WORKS.

ALL DIMENSIONS ARE IN MILLIMETRES UNLESS STATED OTHERWISE.

ALL WORKS TO BE CARRIED OUT IN STRICT ACCORDANCE WITH THE ENGINEER'S SPECIFICATIONS, RELEVANT BRITISH STANDARDS, STATUTORY HEALTH AND SAFETY/C.D.M. REGULATIONS, RELEVANT CODES OF PRACTICE AND THE CURRENT EDITION OF THE BUILDING REGULATIONS.

FOR FINAL SETTING OUT INFORMATION RELATING TO GRID LINES AND WALL POSITIONS REFER TO THE ARCHITECT'S DRAWINGS.

NOTES

Any ambiguities, omissions and errors on Drawings, shall be brought to the Engineers attention immediately.

The Contractor shall confirm the location and level of existing drainage outfalls prior to commencement of the drainage works.

Exact locations of proposed manholes and inspection chambers to be determined on site

All pipes built into the manhole inverts shall be installed with soffits levels UNO.

Connections to road gulleys shall be in 150mm nominal bore. Connections to other terminal fittings shall be in 100mm nominal bore pipe UNO.

Cover levels shown are approximate and shall be adjusted and confirm on site by the Contractor.

The Contractor shall protect the pipeline from damage by site traffic during construction.

Pipework and fittings shall comply with the following requirements except where noted otherwise:

Clayware pipes to BS 65

100 and 150mm diameter, minimum crushing strength 50kN/m on Class F bedding.

Trenches in highways and car parking areas shall be backfilled with Type 1 granular sub-base.

Soft spots in the trench formation shall be removed and replaced with granular bedding unless instructed otherwise.

Road gulleys shall be constructed using a 900mm deep x 450mm diameter gulley pot, srrounded by 150mm thickness C20 concrete, with rodding eye and chained stopper.

Gulley covers shall be Grade B captive hinged ductile iron to BS497 black coated.

Unless noted otherwise manhole covers shall be ductile iron to BS497 black coated with 600 x 600 Grade A.

Connections in pipes between manholes runs shall be formed by using purpose made clayware, 45° junction fittings to BS65. Bend fittings shall be provided where appropriate to direct the flow into the main runs.

Alternatively main pipes may be diamond cored to take lateral connections with a saddle fitting to BS65 and 150mm C20 concrete surround.

The Contractor shall confirm the location of all existing statutory undertakers apparatus and service connections by trial pits prior to opening up for the works.

NOTE: MANHOLE COVER SLAB MUST NOT BE WITHIN THE NEW CARRIAGEWAY CONSTRUCTION.

NOTE: MCC WILL ONLY ADOPT ROAD GULLIES AND GULLY CONNECTIONS.

THE PURPOSE OF THIS DRAWING IS FOR TYPICAL CONSTRUCTION DETAILS ONLY. MANHOLES / PIPE DIAMETERS / SUMP DEPTHS ETC WILL VARY ON PLAN.

REFER TO DRAINAGE LAYOUT DRAWING FOR ALL PIPE SIZES, MANHOLE SIZES, PIPE LENGTHS, SUMP DEPTHS, STORAGE TANK CONFIGURATIONS, COVER LEVELS AND INVERT LEVELS

Rev	Description	Date	By	Chkd
P1	PRELIMINARY ISSUE	12.02.20	JG	DS

Drawing Status: PRELIMINARY

Sutcliffe
Civil & Structural Engineers, Building Surveyors & Geo-Environmentalists
www.sutcliffe.co.uk
LIVERPOOL 0151 227 3155 | MANCHESTER 0161 817 5160 | WREXHAM 01978 664071 | LONDON 020 74 594156

Client: ONE MANCHESTER

Project: VICTORY ROAD MANCHESTER

Drawing Title: TYPICAL DRAINAGE DETAILS SHEET 1 OF 2

Date	Drawn By	Checked By
FEB. 2020	JG	DS

Scale at A1	Project Number
NTS	30669

Sheet Number	Revision
30669-SUT-ZZ-XX-DR-C-665-0001	P1