0.0 0.1 0.2 0.3 0.4 0.5m

Scale 1:10

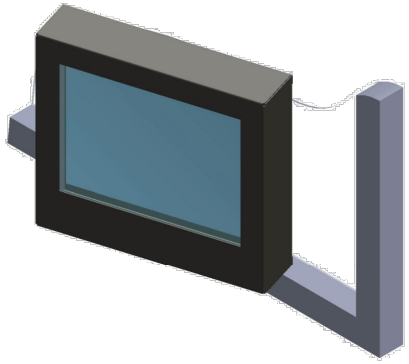

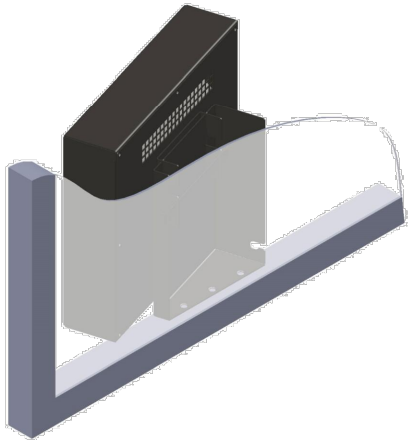

3D view (NTS)

PPC Aluminium shroud finished in RAL 7022 Grey with clear perspex front

15" LCD display screen (max. illumination 600cd/m²)

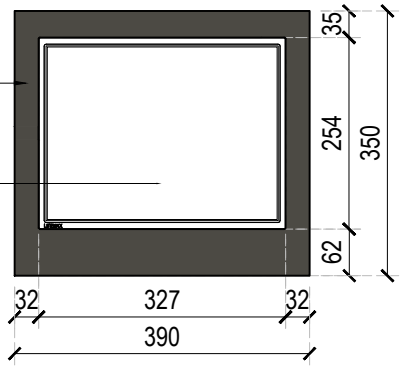

Front Elevation

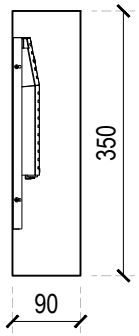

Section

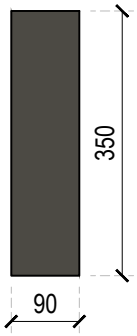

Side Elevation

NOTES AEWTP030C

- All dimensions and levels are to be checked on site.
- Any discrepancies are to be reported to the architect before any work commences
- This drawing shall not be reproduced without express written permission from AEW.
- Title overlay drawings and ownership boundaries are produced using all reasonable endeavors. AEW cannot be responsible for the accuracy or scale discrepancy of base plans supplied to them.
- All works are to be undertaken in accordance with Building Regulations and the latest British Standards.
- All proprietary materials and products are to be used strictly in accordance with the manufacturers recommendations.

CDM 2015

Client notified of duties: **at design workshops**

Principal Designer: **TBC**

Unless noted below, all known hazards have been highlighted on the drawing:

REV	Date	Drawn by: -	Checked by: -
A	09/10/19	JJ	TSS

Annotation from the Note omitted.

Status	Purpose of Issue
S2	For Information

drawing stage **PLANNING**

client **McDonald's Restaurants Ltd**

project **Reconnect Screen**

drawing title **Proposed Reconnect Screen Details**

date	22/05/2019	drawn	RC
scale@A4	1:10	checked	EOH

Rev **A**

Job No **11358-AEW-XXXX-SK01**

aew architects
0161 214 4370
www.aewarchitects.com

Sign 3

Reconnect Screen Details
Scale 1:10