First Fence
Technical Drawings

01283 512 111
01283 480 522
sales@firstfence.co.uk
firstfence.co.uk

V Mesh Fencing

200MM X 50M PROFILED FENCING PANELS OVERVIEW
1800MM HIGH V MESH FENCING
2000MM HIGH V MESH FENCING
2400MM HIGH V MESH FENCING
3000MM HIGH V MESH FENCING (Available on request)

DO NOT SCALE DRAWINGS

best business AWARDS Winner 2016 Best Innovation
best business AWARDS Winner 2016 Best Product / Service Range
best business AWARDS Winner 2016 Best Small to Medium Sized Business
Burton Mail BUSINESS AWARDS 2016 Burton Swadlincote Uttoxeter

CERTIFICATED QSL REGISTERED FIRM
ISO 14001:2015
ISO 22301:2012
ISO 27001:2013
ISO 9001:2015
BS 18001:2007
TRUSTED TRADER Derbyshire County Council
RHA
THE FENCING CONTRACTORS ASSOCIATION

First Fence Ltd, Kiln Way, Swadlincote, Derbyshire, DE11 8EA
A registered company in England and Wales No. 07142033, Vat No: GB 985368854
Branches at: Swadlincote, Tipton, Bristol, Dartford

FirstFence

200mm x 50mm Profiled Fencing Panels

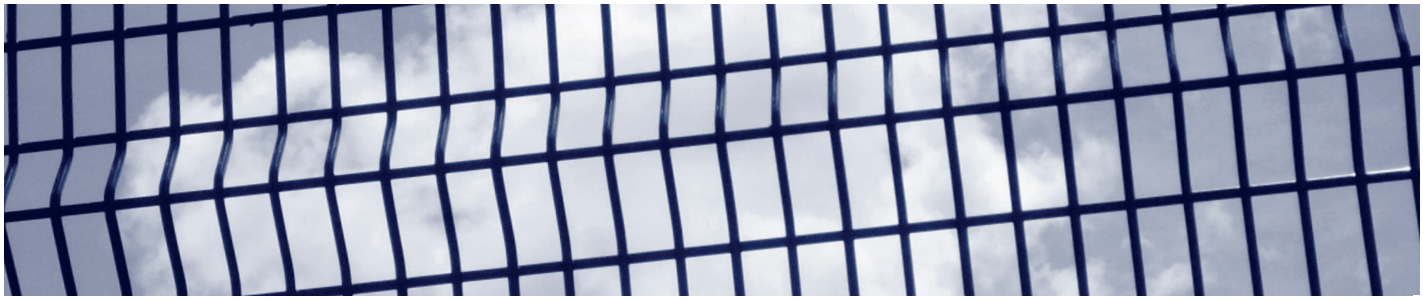

Panel Features

- Horizontal "v" shaped beams give the panels extra rigidity
- Mesh apertures generally 200mm x 50mm (approximately 100mm x 50mm at the beam area)
- Non Standard panel designs are available (minimum production quantity required)
- Produced from Galvanised wire to BS EN 10244-2:2001 class D
- Suitable for multi – lift installations
- Range of wire available from 3.90mm - 7.50mm diameter
- Range of heights available from 1030mm* - 3030mm*
- Panels are normally produced 3.00m wide (reducing installation & post costs by approx 20%, when compared with a 2.50m wide panel)

* Nominal panel heights, actual panel heights may vary with design

Applications

- Commercial Sites
- Ports, Stations and Airports
- Schools and Colleges
- Residential Areas

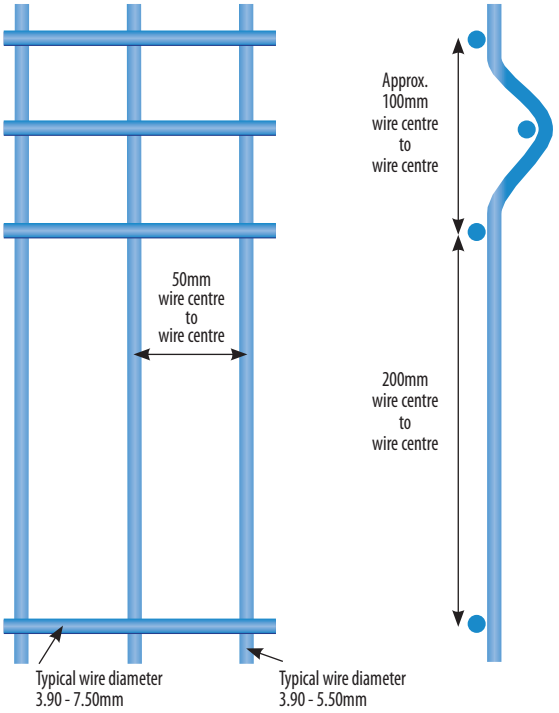

First Fence Ltd, Kiln Way, Swadlincote, Derbyshire DE11 8EA
Phone: 01283 512 111 Fax: 01283 480 522 Web: firstfence.co.uk Email: sales@firstfence.co.uk

FirstFence

200mm x 50mm Profiled Fencing Panels

Panel Specifications

Typical Panel Dimensions (h x w) (mm)	Number of "v" beams	*Typical* Pallet Quantities	Approx. Panel Weight (kg)	Approx. Panel Weight (kg)
1730 x 3000 (1.8m)	3	50	18.8	21.4
2030 x 3000 (2.0m)	3 or 4	50	22.4	25.5
2330 x 3000 (2.4m)	4	50	26.2	29.7
3.0m on request	4	50	31.9	35.9

Panel Finishes Available

In addition to the standard Galvanised wire finish (typically 80-100g/m^2 of Zinc prior to Welding / fabrication) all panels can be offered with triple coat anti-corrosion architectural finish consisting of Galvanised wire + Zinc Phosphate pre-treatment + 100 micron Polyester coating, to give long lasting protection against the elements.

RAL 6005 Moss Green	RAL 9005 Jet Black	RAL 7016 Anthracite Grey	RAL 9010 Pure White

A wide range of additional colours are available, please contact the Sales Office for further details.

First Fence Ltd, Kiln Way, Swadlincote, Derbyshire DE11 8EA
Phone: 01283 512 111 Fax: 01283 480 522 Web: firstfence.co.uk Email: sales@firstfence.co.uk

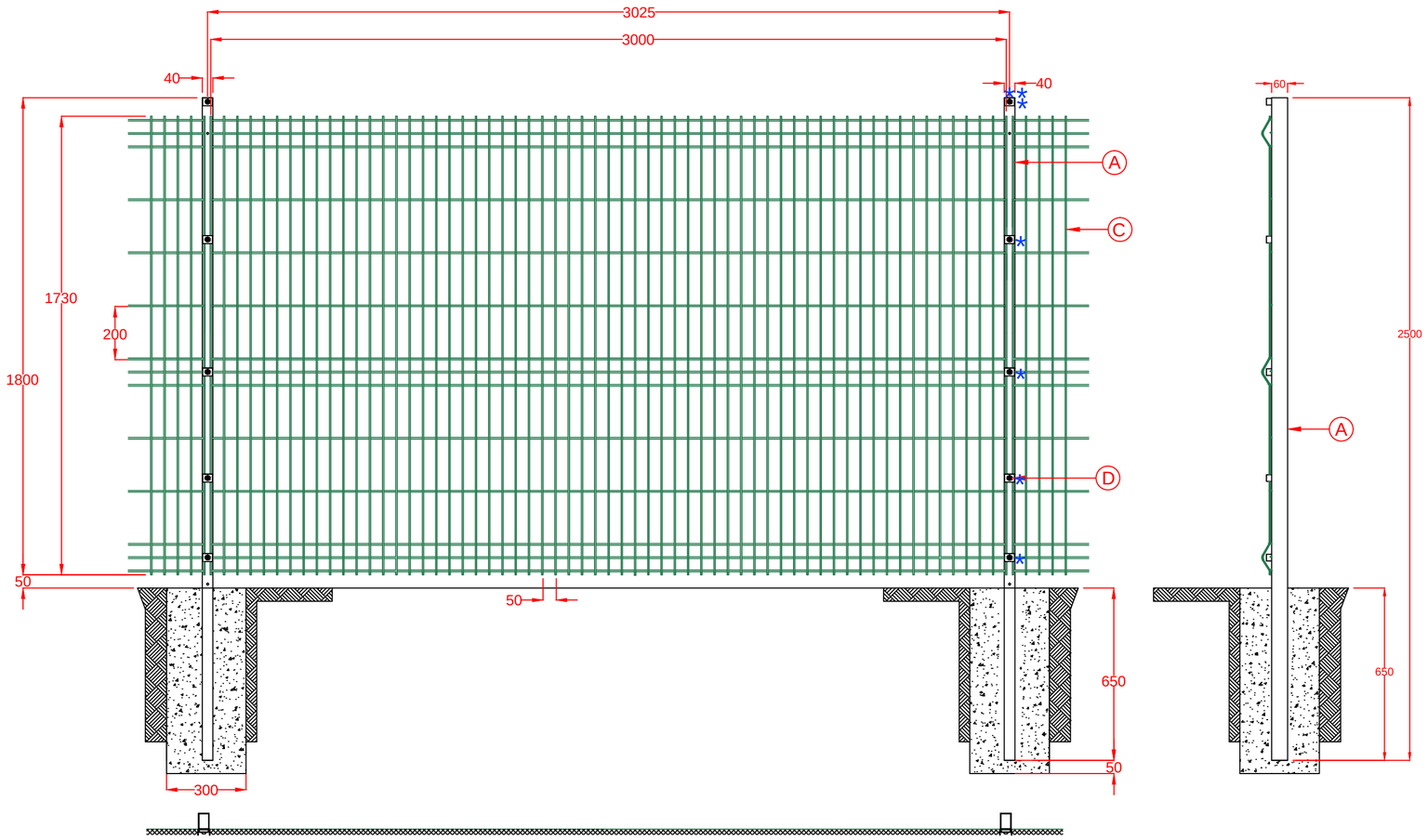

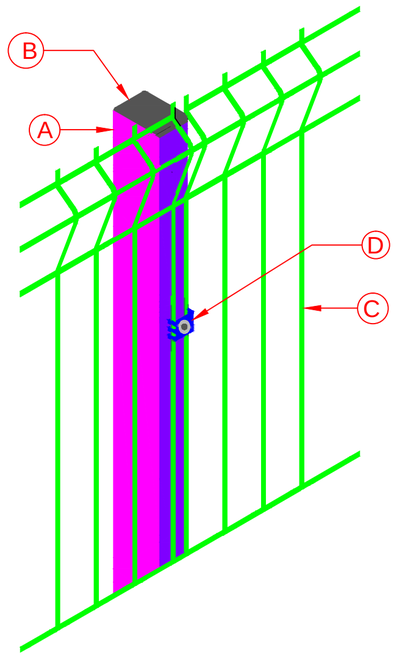

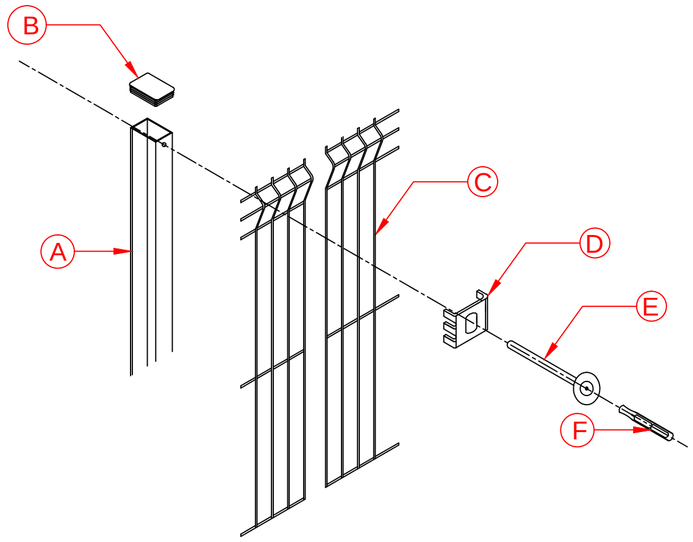

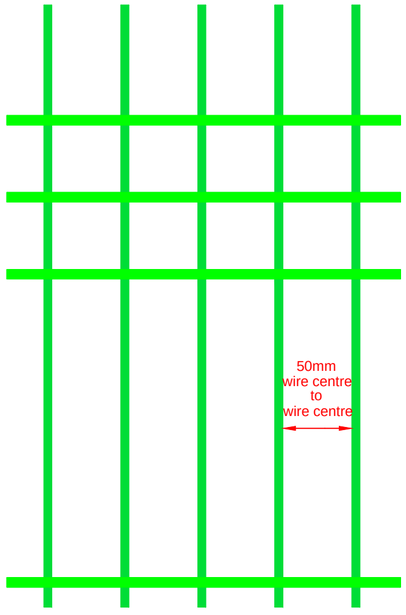

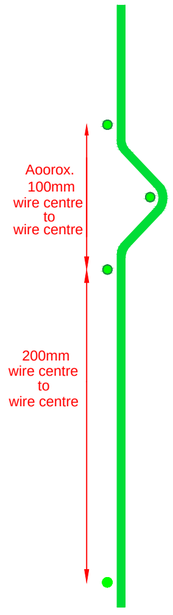

Parts	Component	Qty	Dimensions
A	Post *	1	2500x60x40
B	Post Caps *	1	60x40x20
C	V Mesh Panel	1	1730x3000
D	Fixing Clips *	5	
E	Security Bolt *	5	M8 x 40mm
F	Torque Bit *	1	

* ITEMS NOT INCLUDED AS PART OF SALEABLE KIT. ITEMS INCLUDED WITH SALEABLE KIT ARE INDICATED IN COMPONENT BOX ABOVE. DRAWING FOR ILLUSTRATION PURPOSES ONLY.

DRAWING NO: 814	TITLE: 1800MM HIGH V MESH FENCING
DRAWN BY: SATYA	DATE: 06/07/2015
SCALE: 420X297@A3 ALL DIMENSIONS ARE IN MM	SHEET: 14

FirstFence
Kiln Way, Swadlincote, Derbyshire, DE11 8EA
Tel: 01283 512 111 Fax: 01283 480 552
sales@firstfence.co.uk www.firstfence.co.uk

NOTE:
- THIS DRAWING IS NOT TO BE SCALED - FIGURED DIMENSIONS ONLY TO BE TAKEN
- SHOULD ANY DISCREPANCIES BE FOUND WITH THIS DRAWING, PLEASE INFORM FIRST FENCE
- COPYRIGHT OF THIS DRAWING IS OWNED BY FIRST FENCE LIMITED

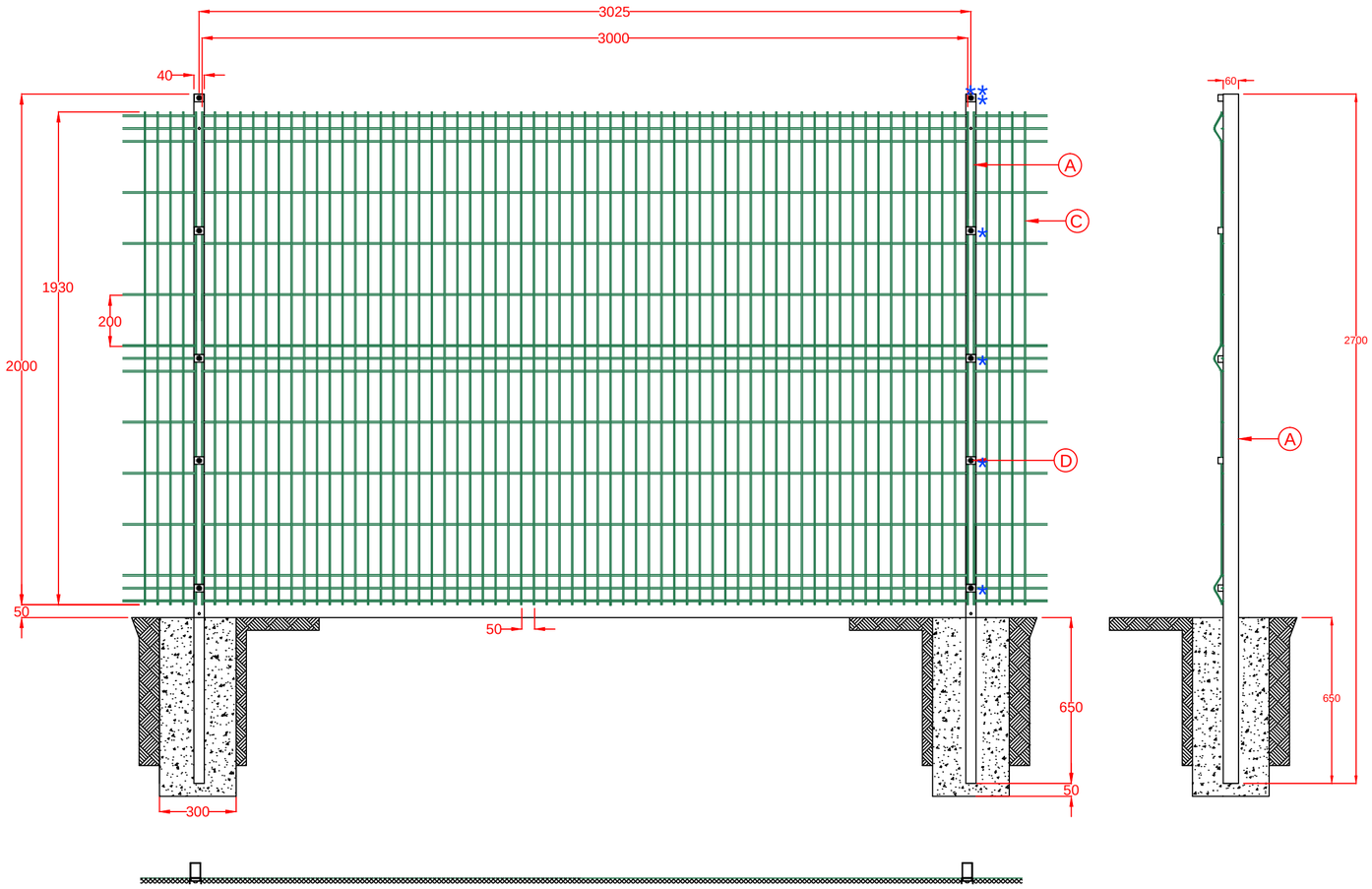

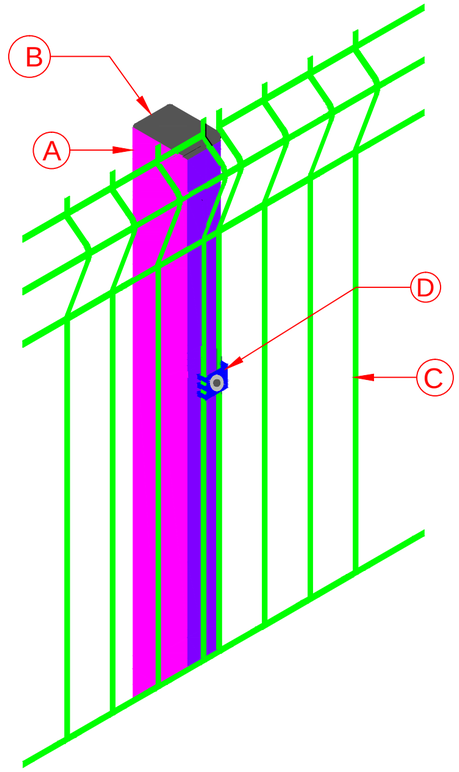

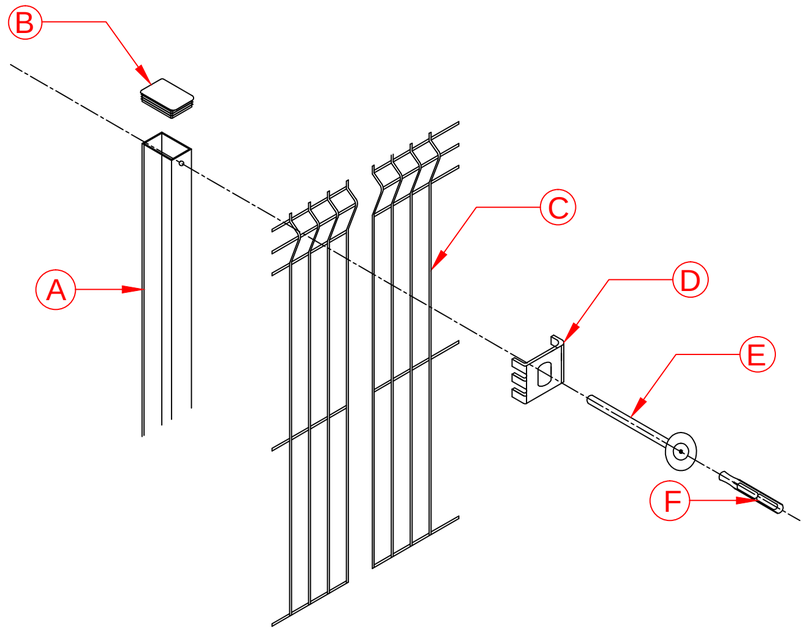

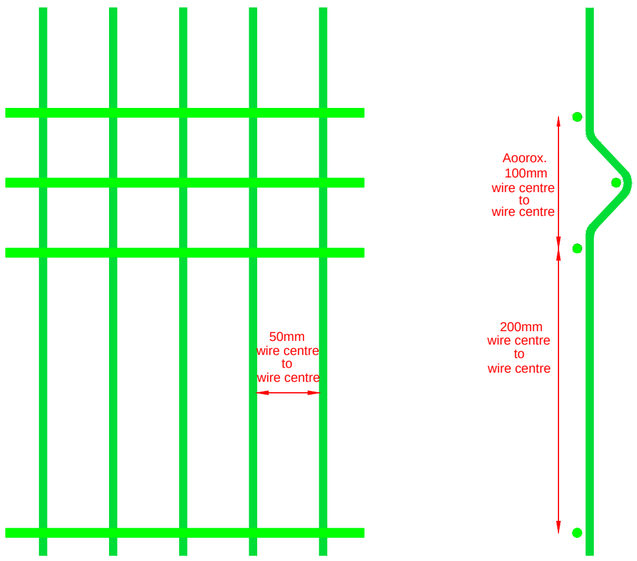

Parts	Component	Qty	Dimensions
A	Post *	1	2700x60x40
B	Post Caps *	1	60x40x20
C	V Mesh Panel	1	1930x3000
D	Fixing Clips *	5	
E	Security Bolt *	5	M8 x 40mm
F	Torque Bit *	1	

* ITEMS NOT INCLUDED AS PART OF SALEABLE KIT. ITEMS INCLUDED WITH SALEABLE KIT ARE INDICATED IN COMPONENT BOX ABOVE. DRAWING FOR ILLUSTRATION PURPOSES ONLY.

DRAWING NO: 815	TITLE: 2000MM HIGH V MESH MESH FENCING
DRAWN BY: SATYA	DATE: 06/07/2015
SCALE: 420X297@A3 ALL DIMENSIONS ARE IN MM	SHEET: 15

FirstFence
Kiln Way, Swadlincote, Derbyshire, DE11 8EA
Tel: 01283 512 111 Fax: 01283 480 552
sales@firstfence.co.uk www.firstfence.co.uk

NOTE:
- THIS DRAWING IS NOT TO BE SCALED - FIGURED DIMENSIONS ONLY TO BE TAKEN
- SHOULD ANY DISCREPANCIES BE FOUND WITH THIS DRAWING, PLEASE INFORM FIRST FENCE
- COPYRIGHT OF THIS DRAWING IS OWNED BY FIRST FENCE LIMITED

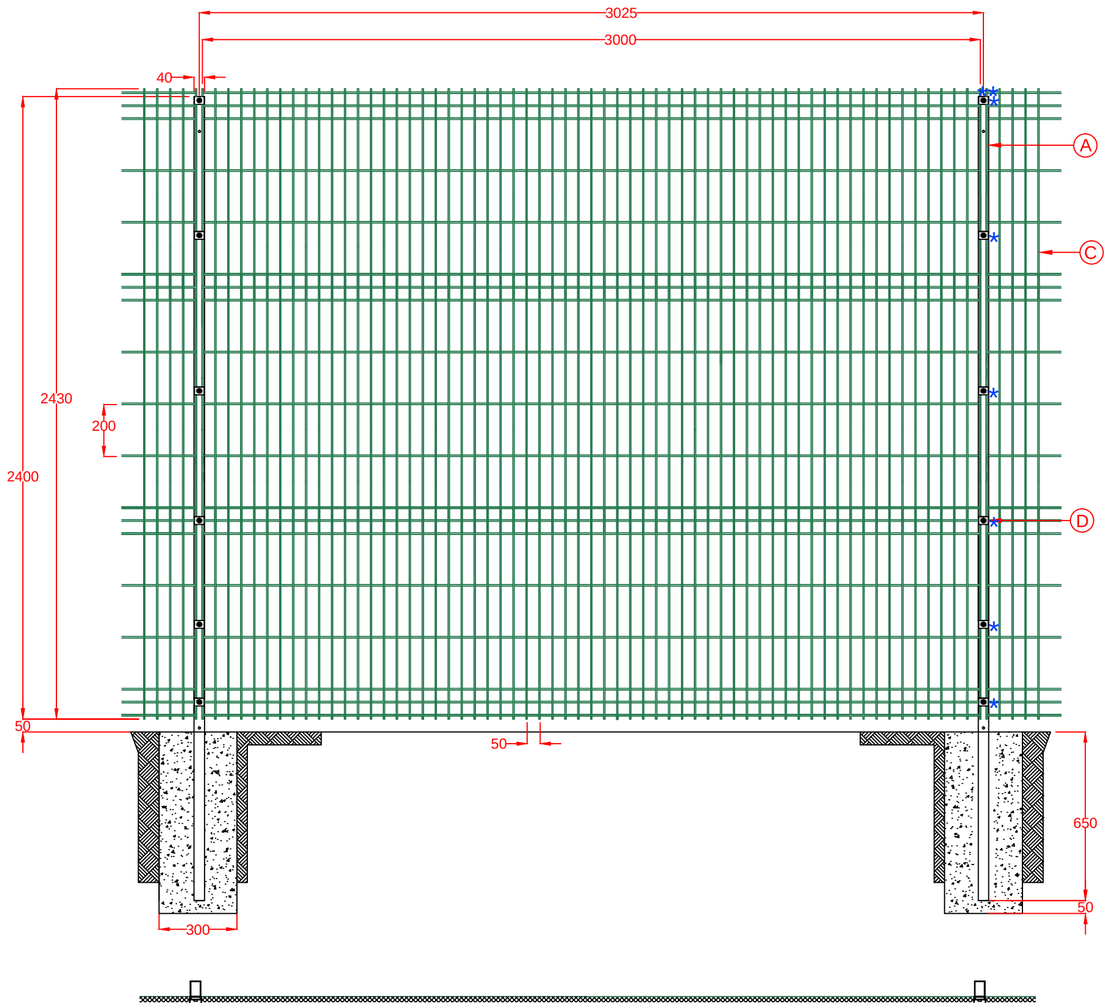

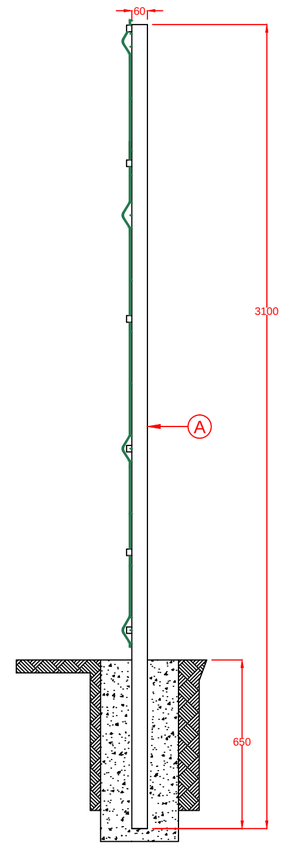

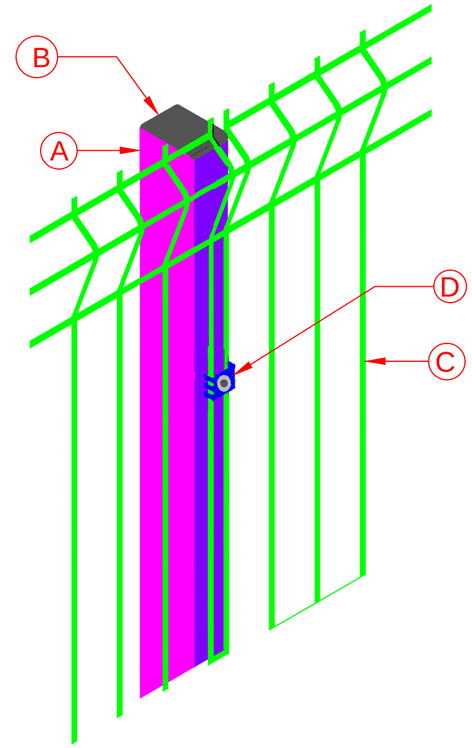

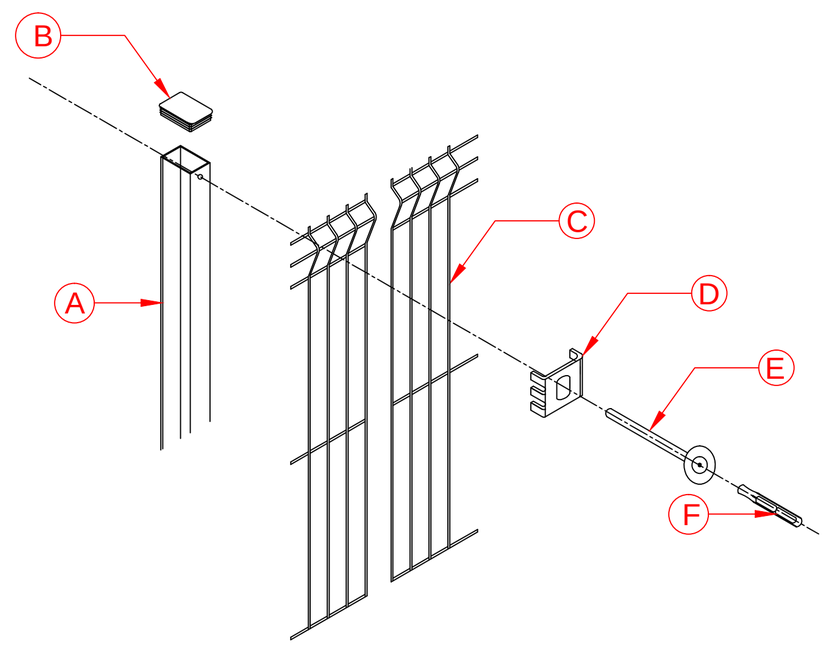

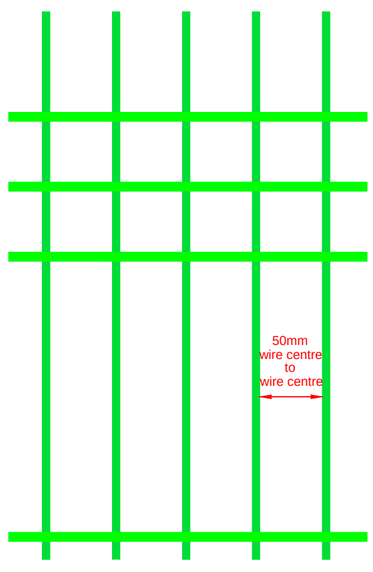

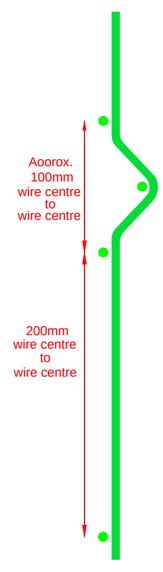

Parts	Component	Qty	Dimensions
A	Post *	1	3100x60x40
B	Post Caps *	1	60x40x20
C	V Mesh Panel	1	2430x3000
D	Fixing Clips *	6	
E	Security Bolt *	6	M8 x 40mm
F	Torque Bit *	1	

* ITEMS NOT INCLUDED AS PART OF SALEABLE KIT. ITEMS INCLUDED WITH SALEABLE KIT ARE INDICATED IN COMPONENT BOX ABOVE. DRAWING FOR ILLUSTRATION PURPOSES ONLY.

DRAWING NO: 816	TITLE: 2400MM HIGH V MESH FENCING
DRAWN BY: SATYA	DATE: 06/07/2015
SCALE: 420X297@A3 ALL DIMENSIONS ARE IN MM	SHEET: 16

FirstFence
Kiln Way, Swadlincote, Derbyshire, DE11 8EA
Tel: 01283 512 111 Fax: 01283 480 552
sales@firstfence.co.uk www.firstfence.co.uk

NOTE:
- THIS DRAWING IS NOT TO BE SCALED - FIGURED DIMENSIONS ONLY TO BE TAKEN
- SHOULD ANY DISCREPANCIES BE FOUND WITH THIS DRAWING, PLEASE INFORM FIRST FENCE
- COPYRIGHT OF THIS DRAWING IS OWNED BY FIRST FENCE LIMITED