aesthetics and performance combine

SF52
CURTAIN WALL SYSTEMS

SF52 CURTAIN WALL SYSTEMS

SENIOR ARCHITECTURAL SYSTEMS

welcome to the **future** of curtain wall systems

Developed by Senior Architectural Systems, one of the largest and most respected fenestration systems companies in the UK today, the SF52 curtain wall system is the next generation of evolved products, to exceed current and meet future building regulations.

Senior is constantly looking for new and innovative products, processes and service enhancements that will enable your next project to stand out from the crowd and make our world a better place.

If you could say it in words there
would be no reason to paint.
Edward Hopper The way to get
started, is to quit
begin doing.
joy forever.
pride in how far
can go. Christian

A visual **statement**

Creativity can transform a ‘typical’ façade into an impressive, iconic, award-winning landmark. Whether ground floor or high rise, SF52 is the creative answer for both new projects and refurbishments.

- *Visual consistency. Constant 52mm sight lines for the mullions and transoms giving a uniform appearance*
- *Almost unlimited choice of colours and finishes both inside and out*
- *Complete compatibility with other Senior Architectural Systems windows and doors*
- *Frameless vents*
- *Offered fully capped, silicone sealed (capless) or a combination of the two*
- *Full design support and back-up available*
- *Future plans for BIM compatibility*

fabrication **quality**

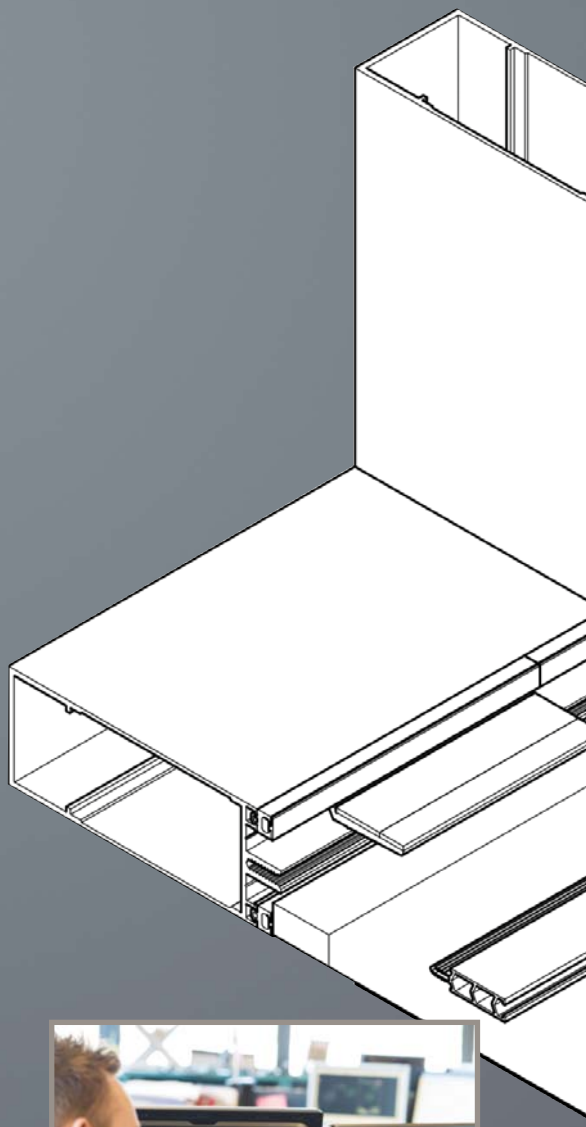

Great design needs to be supported by quality of manufacture. The Senior SF52 curtain wall system has been designed and developed to ensure that high aesthetics are equally matched by consistent and reliable construction quality.

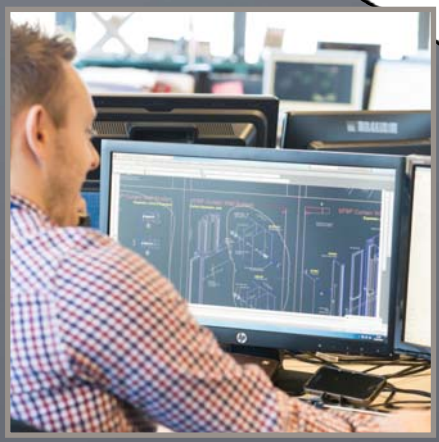

- *SF52 has been carefully designed to achieve a consistently high quality of fabrication and finish*
- *Fabricator focused. Simple and straightforward to fabricate*
- *High quality construction. Standardised assembly details across all profiles, combined with square cut sections and specially designed components, minimise fabrication time and provide consistent quality of assembly*
- *A large range of transom/mullion sizes, reinforcing sleeves and boxes are available to allow larger, unsupported spans, as well as the option for concealed steel reinforcing*
- *No special machinery or tooling needed*

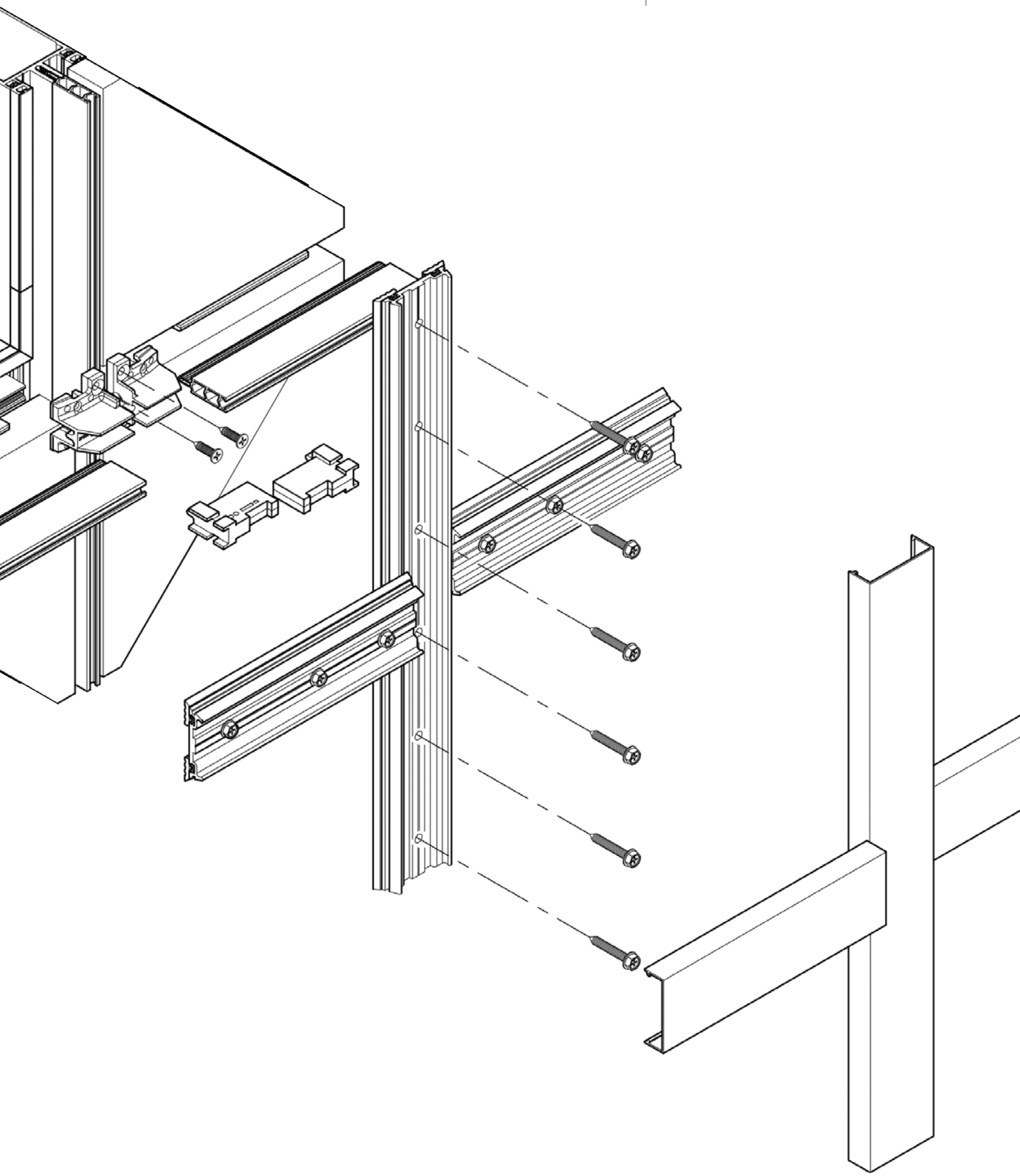

flexibility & performance

SF52 is a complete curtain walling system, offering specifiers flexibility and enhanced thermal performance to exceed current and meet future building regulations.

- *Fully CWCT tested (all sub-systems)*
- *High thermal performance*
- *Excellent weather performance*
- *Powder coated (single or dual colour) aluminium*
- *40 or 60 micron finish*
- *Anodised aluminium finish*
- *Double or triple glazed units from 24mm to 50mm*
- *Window options, including frameless vents*
- *Door options, including automation*
- *Capless or capped system*
- *Building Management System (BMS) compatible*
- *Extensive warranty*
- *40+ year life expectancy*
- *Durable, cradle to cradle, recyclable product*

glazing **options**

Completing the picture, glazed units are manufactured by our glazing division, Senior Glass Systems, at our dedicated 40,000 sq ft UK facility.

Continual investment in new plant and machinery, including a dedicated fleet of delivery vehicles, enables us to control quality through rigorous testing, provide bespoke solutions to schedules and timely deliveries.

- *Glazing ranges from 24mm to 50mm*
- *Range of infills, including double and triple glazed*
- *Glazed units are manufactured at our dedicated 40,000 sq ft UK facility in Scarborough*
- *Toggle system provides a flush, no cap, large glass unit effect*
- *High performance glass options*

LISEC

system capabilities

The following pages provide an overview of the system capabilities of the SF52 curtain wall system. For detailed information on weather ratings, U-values and any other technical matter, please contact our technical department: **info@sasmail.co.uk** or call, **+44 (0)1709 772 600**

Glazing Thicknesses

Glazing ranges from 24mm to 50mm via the use of various gaskets and thermal breaks

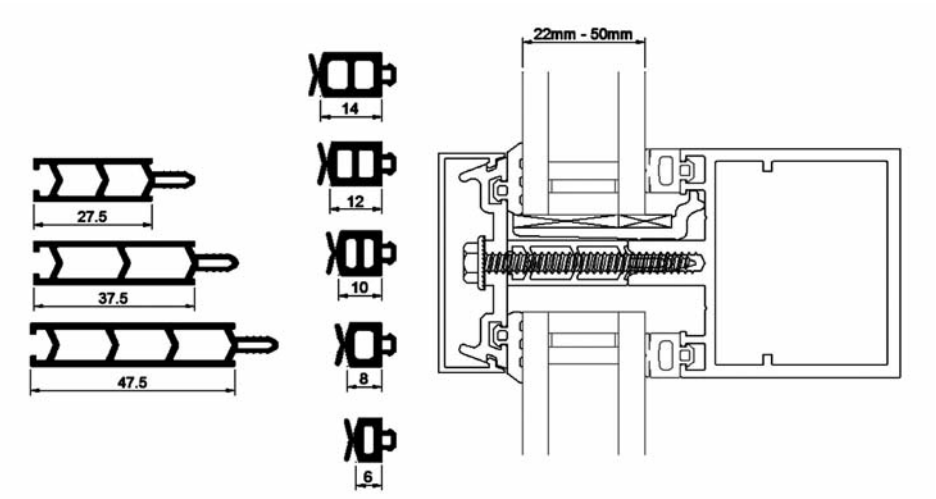

Glazing Facets

Glazing facets available from 180 degrees to 90 degrees

Each can receive a range of glazing thicknesses

20 degree angle using standard sections and components

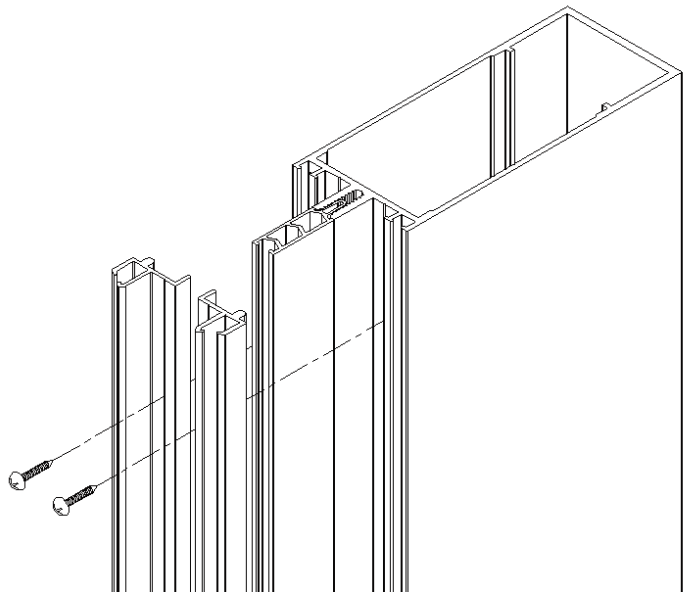

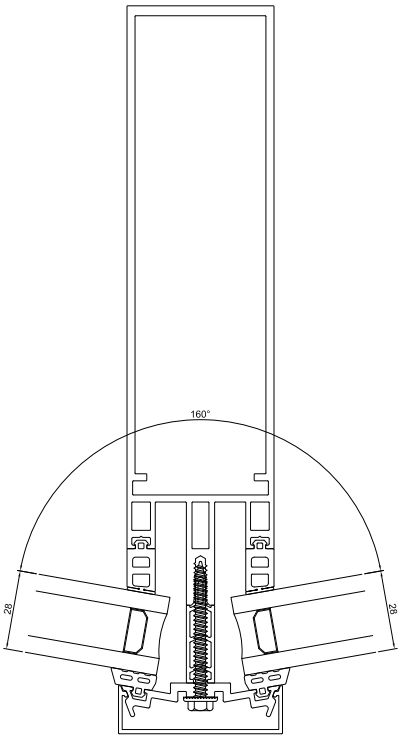

Sloped & Mullion Drainage

Achieved via spouts or by using specially designed mullions

Each can cover a range of glazing options

Accessories are common throughout the SF52 system (gaskets, screws, pressure plate thermal break etc.)

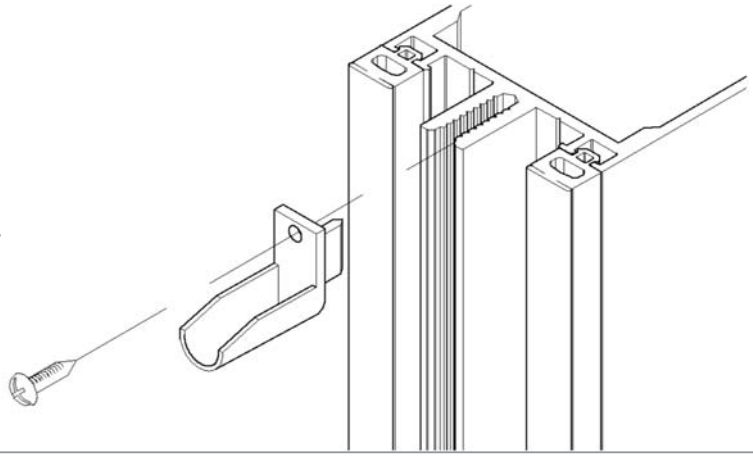

Glazing Types

Different types of glazing can be achieved using the same sections.

Fully Capped

Fully Frameless

Capped Vertically – Frameless Horizontally

Capped Horizontally – Frameless Vertically

Feature caps available

60mm option for barrier loading and interstitial sway

Transoms and mullions

Fully traceable CE Marking

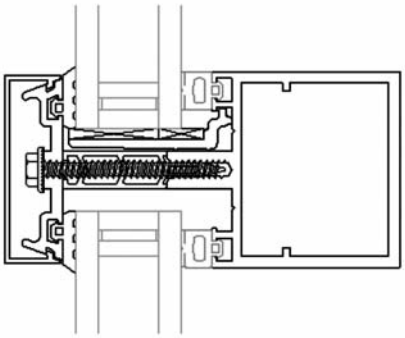

Capped

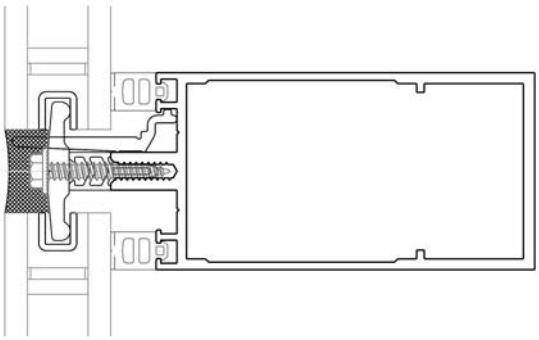

Capless

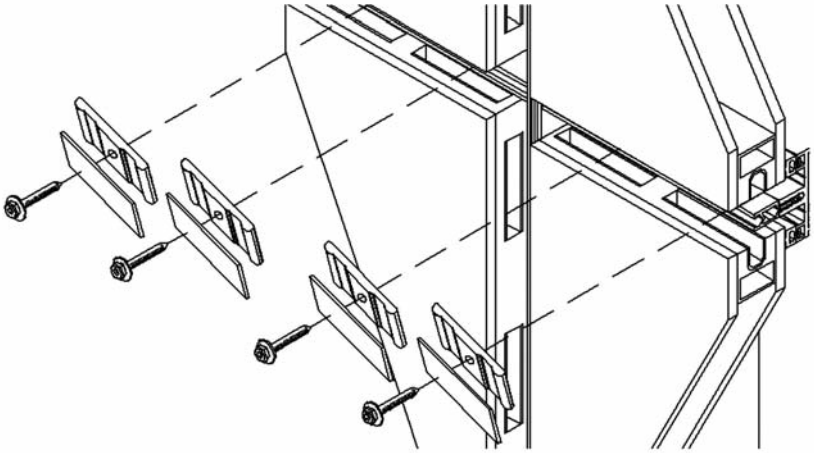

system capabilities

The following pages provide an overview of the system capabilities of the SF52 curtain wall system. For detailed information on weather ratings, U-values and any other technical matter, please contact our technical department: **info@sasmail.co.uk** or call, **+44 (0)1709 772 600**

Window/Door Inserts

Most of the current SAS range of windows and doors can be easily used in conjunction with the SF52 system by using adaptors.

Transom/Mullion Sizes

A large range of transom/mullion sizes and reinforcing sleeves and boxes are available allowing you to perform larger spans.

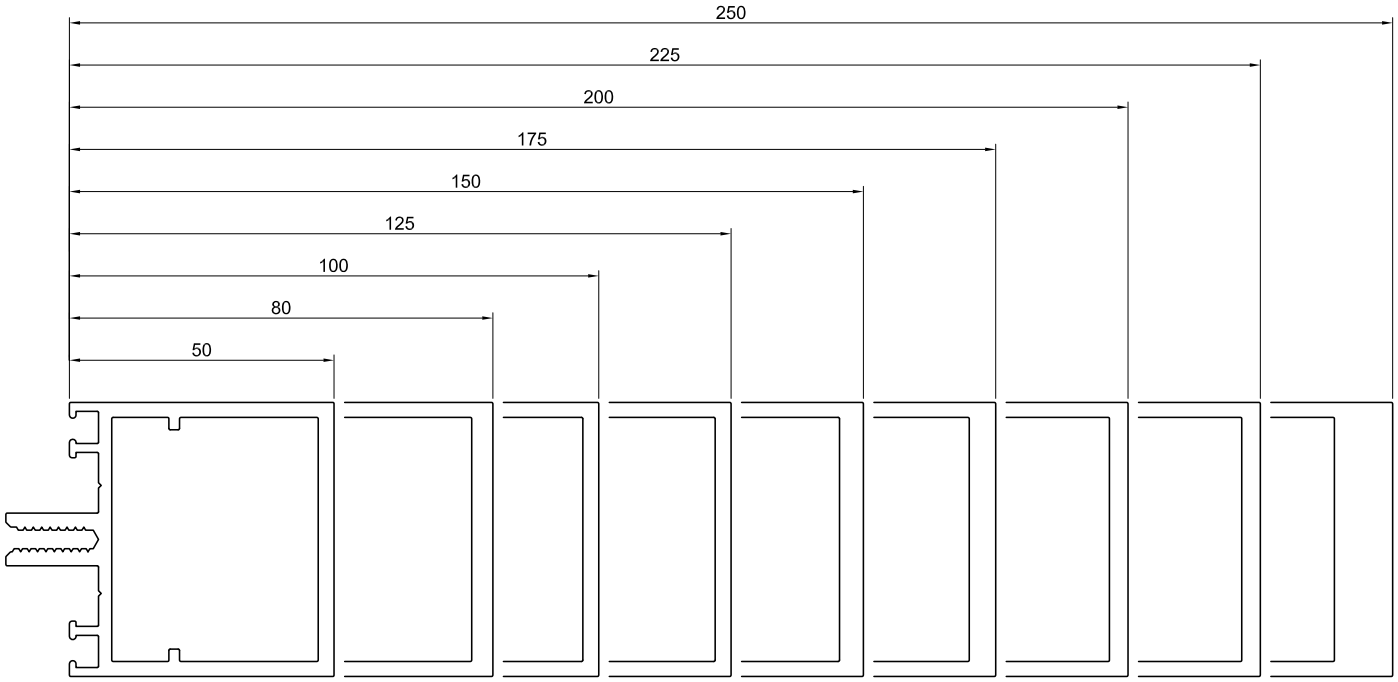

System Fabrication

All square cut joints (no complicated lap joints)

Front loaded transoms

No special machinery required

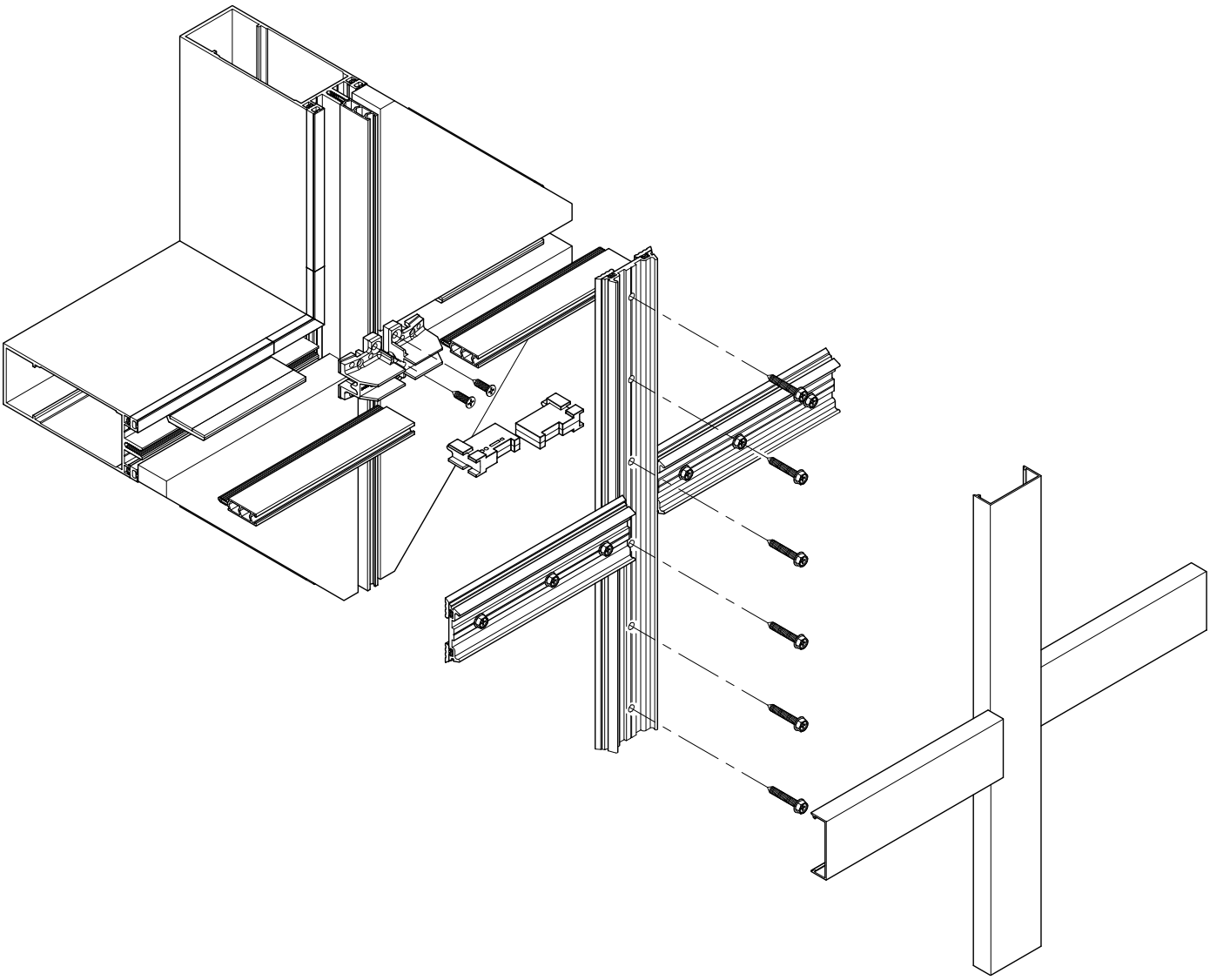

HEAD OFFICE

Senior Architectural Systems Ltd, Eland Road, Denaby Main, Doncaster, South Yorkshire, DN12 4HA.
Tel: **01709 772 600.** Fax: **01709 772 601.** E-mail: **info@sasmail.co.uk**

BRANCHES

Scotland; Unit 4 Dunlop Court, Deans Industrial Estate SW, Livingston, West Lothian, EH54 8SL.
Tel: **01506 407 640.** Fax: **01506 407 641.**

South; Unit 4 Leeway Industrial Estate, Newport, South Wales, NP19 4SL.
Tel: **01633 277 880.** Fax: **01633 277 121.**

Senior Glass Systems Ltd, Lakeside House, Hopper Hill Road, Eastfield, Scarborough, YO11 3YS.
Tel: **01723 580 010.** Fax: **01723 580 018.** E-mail: **ordering@seniorglass.co.uk**

Visit our showroom at the Building Centre; Ground level, L4, Store Street, London, WC1E 7BT.

www.seniorarchitectural.co.uk

CCAS REGISTERED ISO 9001 • 14001 • OHSAS 18001 1996/026 — UKAS MANAGEMENT SYSTEMS 055

RIBA CPD PROVIDERS NETWORK

nbsPlus

UK GREEN BUILDING COUNCIL Member

Passivhaus Trust MEMBER

CENTRE FOR WINDOW AND CLADDING TECHNOLOGY

CAB Council for Aluminium in Building Member

Enhanced Security Door
Enhanced Security Window
Window General Performance
Q-MARK CERTIFICATION BMTRADA

UKAS PRODUCT CERTIFICATION 012

ALUMINIUM | HYBRID | GLASS

SAS **SENIOR** ARCHITECTURAL SYSTEMS

Senior Architectural Systems is a major UK supplier of fenestration solutions, specialising in providing aluminium, timber and glass glazing systems to the highest standards. This brochure is intended to show what makes Senior's unique and how our products and services can make a difference to customers, clients, their projects and the environment.

Whilst every effort has been made to ensure the accuracy of this publication, no responsibility for content is taken by Senior Architectural Systems Ltd. We strongly recommend the specification for any given application is checked with Senior Architectural Systems before an order is placed. Senior Architectural Systems reserves the right to alter any of the specifications given in this publication without prior notice due to a process of continual development.