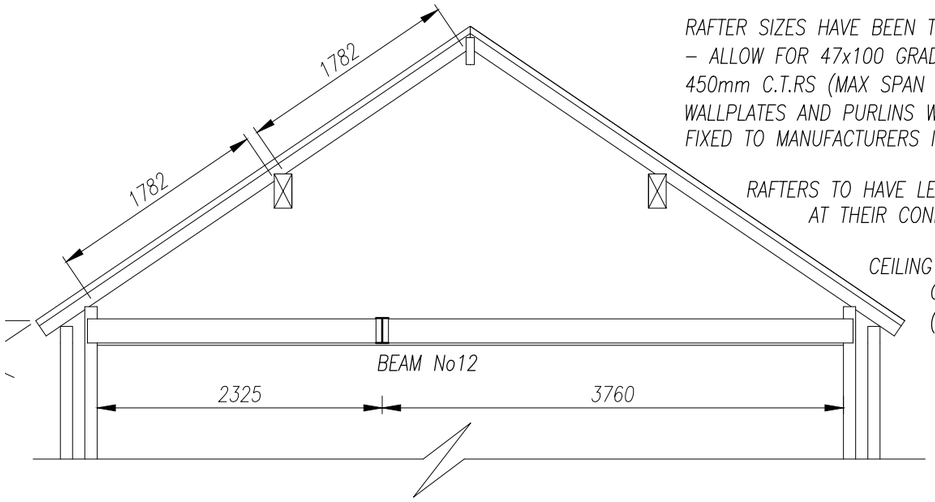

RAFTER SIZES HAVE BEEN TAKEN FROM THE 'TRADA' SPAN TABLES. – ALLOW FOR 47x100 GRADE C16 (SC3) TIMBER RAFTERS AT 450mm C.T.RS (MAX SPAN 2.17m), FULLY SECURED TO RIDGE / WALLPLATES AND PURLINS WITH SUITABLE CONNECTORS / CLIPS FIXED TO MANUFACTURERS INSTRUCTIONS.

RAFTERS TO HAVE LEVEL HORIZONTAL BEARINGS AT THEIR CONNECTION WITH WALLPLATES

CEILING JOISTS TO BE 47x195 GRADE C16 TIMBERS AT 450mm CTRS (MAX SPAN 4.28m)

SECTION 'Z–Z' NEW ROOF (1:50) (TYPICAL DETAIL)

(NOTE – THE FINAL DESIGN FOR THE MAIN HOUSE ROOF WILL BE DECIDED ONCE A CONTRACTOR IS APPOINTED AND THE PREFERED CONSTRUCTION METHODS HAVE BEEN DISCUSSED – ALL DETAILS / SIZES ETC WILL BE FORWARDED TO THE LOCAL AUTHORITY FOR APPROVAL)

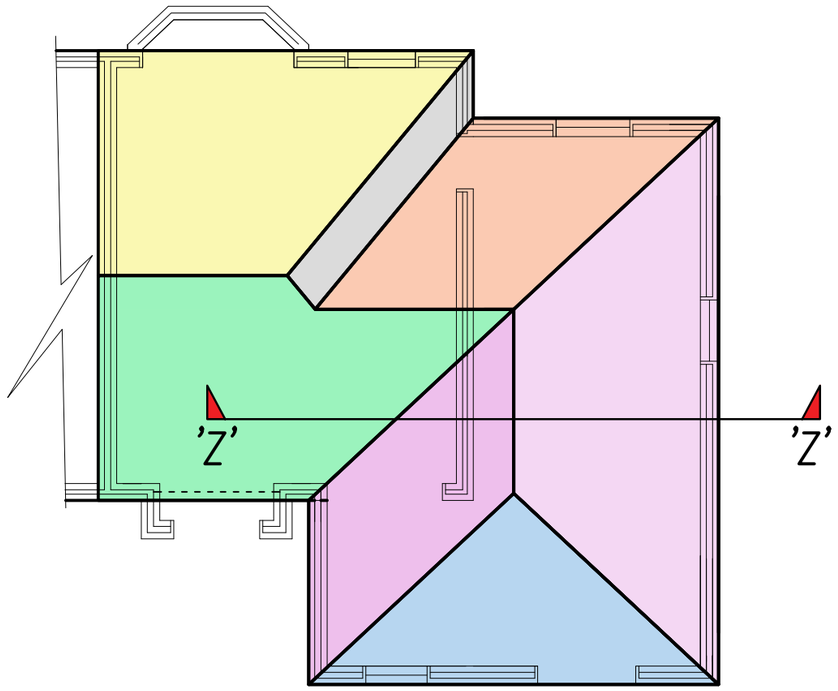

PLAN VIEW – PROPOSED ROOF PITCHES (1:100)

ROOF FINISHES ARE TO MATCH THE EXISTING FINISHES WHERE POSSIBLE AND TO BS 5534:2014. NEW TILES / TILING SYSTEM TO SUIT ROOF PITCH OF APPROX 33–36° (TO BE CONFIRMED ON SITE). TILES TO BE MECHANICALLY FIXED TO THE SATISFACTION OF THE BUILDING CONTROL OFFICER

BREATHABLE SARKING MEMBRANE WITH 100mm VERTICAL LAP BETWEEN RUNS. MEMBRANE TO BE SECURELY FIXED TO THE SATISFACTION OF THE BUILDING CONTROL OFFICER

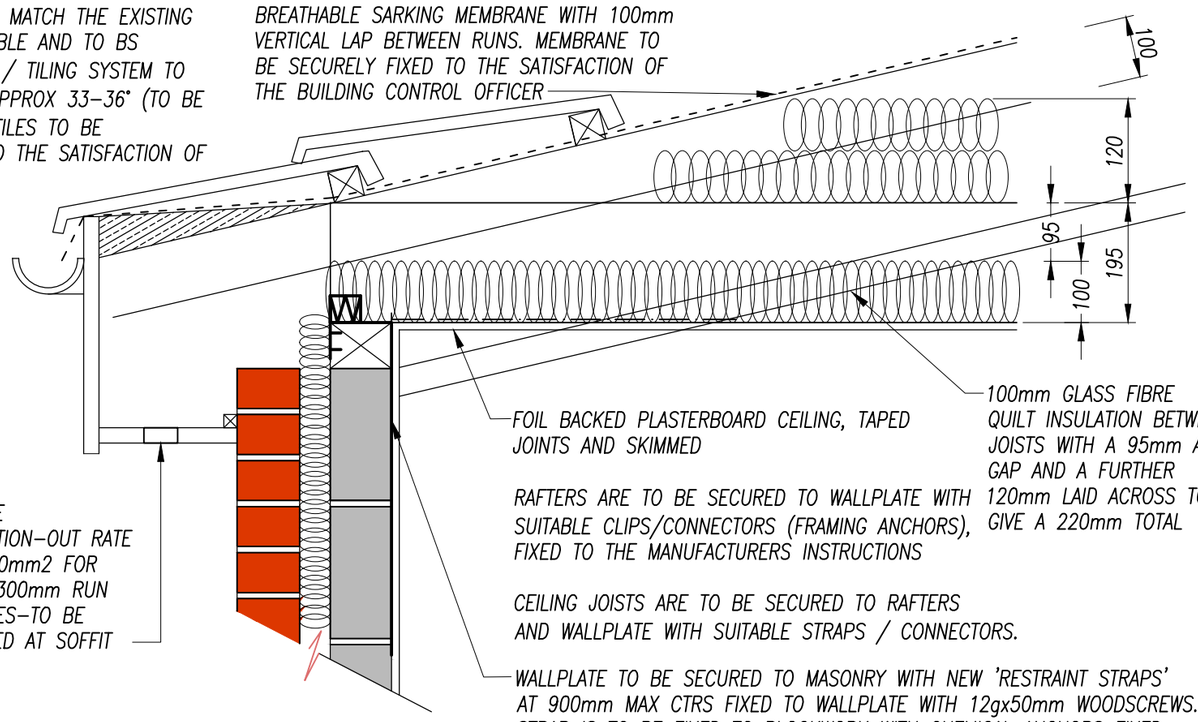

FOIL BACKED PLASTERBOARD CEILING, TAPED JOINTS AND SKIMMED

100mm GLASS FIBRE QUILT INSULATION BETWEEN JOISTS WITH A 95mm AIR GAP AND A FURTHER 120mm LAID ACROSS TO GIVE A 220mm TOTAL

RAFTERS ARE TO BE SECURED TO WALLPLATE WITH SUITABLE CLIPS/CONNECTORS (FRAMING ANCHORS), FIXED TO THE MANUFACTURERS INSTRUCTIONS

POSITIVE VENTILATION–OUT RATE OF 3000mm2 FOR EVERY 300mm RUN OF EAVES–TO BE PROVIDED AT SOFFIT

CEILING JOISTS ARE TO BE SECURED TO RAFTERS AND WALLPLATE WITH SUITABLE STRAPS / CONNECTORS.

WALLPLATE TO BE SECURED TO MASONRY WITH NEW 'RESTRAINT STRAPS' AT 900mm MAX CTRS FIXED TO WALLPLATE WITH 12gx50mm WOODSCREWS. STRAP IS TO BE FIXED TO BLOCKWORK WITH CHEMICAL ANCHORS FIXED THRO' STRAP AND INTO BLOCK.

TYPICAL EAVES DETAIL (1:10)

(NEW ROOF TO REAR EXTENSION)

REVISED DRAWINGS FOR LA APPROVAL

GENERAL ROOF NOTES:

RAFTER SIZES HAVE BEEN TAKEN FROM THE 'TRADA' SPAN TABLES. – ALLOW FOR 47x100 GRADE C16 (SC3) TIMBER RAFTERS AT 450mm C.T.RS (MAX SPAN 2.17m), FULLY SECURED TO RIDGE / WALLPLATES AND PURLINS WITH SUITABLE CONNECTORS / CLIPS FIXED TO MANUFACTURERS INSTRUCTIONS.

RAFTERS TO HAVE LEVEL HORIZONTAL BEARINGS AT THEIR CONNECTION WITH WALLPLATES

CEILING JOISTS TO BE 47x195 GRADE C16 TIMBERS AT 450mm CTRS (MAX SPAN 4.28m)

NOTE – CEILING JOISTS TO BE PART SUPPORTED BY THE NEW BEAM No11

FINAL DESIGN FOR THE NEW ROOF IS TO BE AGREED BETWEEN THE APPOINTED CONTRACTOR AND THE BUILDING CONTROL OFFICER.

THE FINAL DEPTH OF NEW ROOF INSULATION IS TO BE AGREED ON SITE WITH THE BUILDING CONTROL OFFICER.

	AMENDMENT 'A' – OCT 2020 – REAR EXTENSION REDUCED IN PROJECTION FROM 4m TO 3m PLUS SIDE WINDOWS REMOVED AT FIRST FLOOR		
	MAY 20 –DRAWINGS FOR LOCAL AUTHORITY APPROVAL	TO BE PRINTED AT A3	
LOCATION ADDRESS: 42 SPRINGDALE GARDENS, DIDSBURY M20	DRAWING TITLE: STRUCTURAL DETAILS No2	DATE: MAY 20	SHEET No: 13 OF 17
	PROJECT DESCRIPTION: PROPOSED 2 STOREY SIDE & PART REAR EXTENSION PLUS DEMOLITION OF GARAGE & ITS REPLACEMENT WITH A HABITABLE STRUCTURE.	DRAWING NUMBER: RT/0520/13A	