CLEARANCE REQUIREMENTS

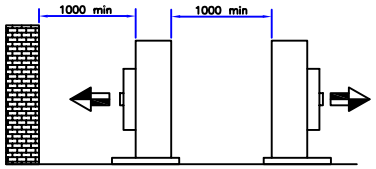

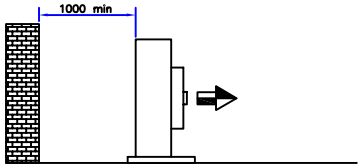

TOP VIEW

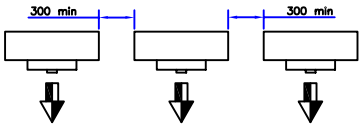

FRONT VIEW

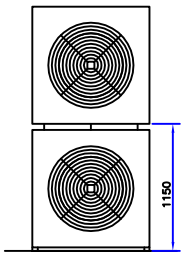

STACKED ON PURPOSE BUILT FRAME

TOP VIEW

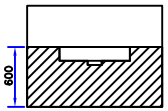

ACCESS AREA FOR MAINTENANCE AND SERVICE

CONDENSERS MUST BE LOCATED IN AN UNOBSTRUCTED POSITION TO ENSURE ADEQUATE AIR CIRCULATION THROUGH THE COOLING COILS. CARE MUST BE TAKE TO AVOID "SHORT CIRCUIT" AIR PATHS AND RE-CIRCULATION OF AIR FROM ONE UNIT TO ANOTHER.

WHENEVER POSSIBLE, POSITION CONDENSERS SUCH THAT THEY ARE REASONABLY SHELTERED FROM STRONG WINDS AND AVOID PREVAILING WINDS BLOWING DIRECTLY ONTO THE FAN(S). UNITS SHOULD BE BOLTED DOWN IN CASE OF HIGH WINDS.

CONDENSERS SHOULD NOT BE SITED MORE THAN 35M (115 FT) ABOVE OR 15M (50 FT) BELOW THE BASE OF THE AIR CONDITIONING UNIT.

ACCESS SPACE SHOULD BE PROVIDED AS DETAILED ON THE DRAWINGS ABOVE BUT ALLOWING AT LEAST ONE METRE FREE ACCESS

SIZE 008 TO 032

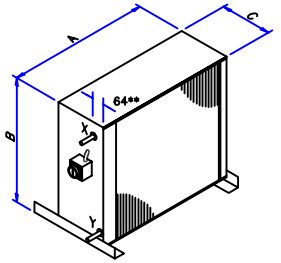

SIZE 050

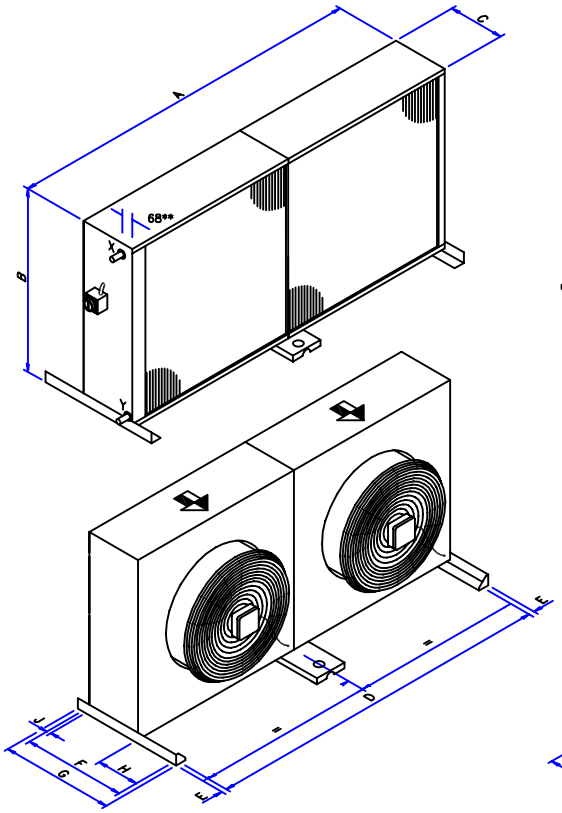

SIZE 075

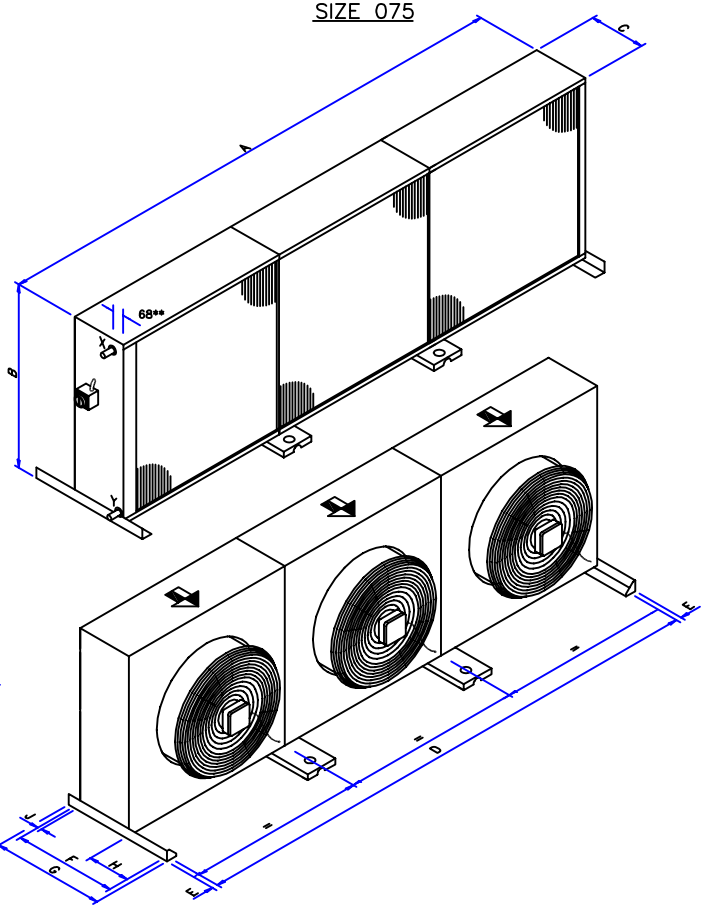

SIDE VIEW

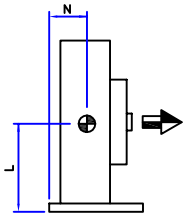

TOP VIEW

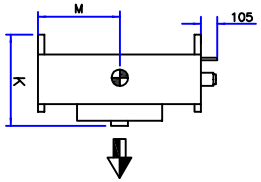

MODEL	A (DIM)	B (DIM)	C (DIM)	D (DIM) FIXING HOLE CRS.	E (DIM)	F (DIM) FIXING HOLE CRS.	G (DIM)	H (DIM)	J (DIM)	K (DIM) MAX O/A WIDTH*	CENTRE OF GRAVITY*			X (inch) HOT GAS	Y (inch) LIQUID	ESTIMATED DRY WEIGHT (kg)	
											L	M	N			EC	AC
DMOUCD008	645	602	265	597	26	323	420	45	13	530	301	323	223	5/8	5/8	32	30
DMOUCD013	825	738	305	777	26	400	480	65	30	600	370	413	280	3/4	3/4	54	45
DMOUCD021	975	888	305	927	26	400	480	65	30	600	435	487	280	7/8	7/8	58	50
DMOUCD026	1125	1042	325	1077	26	520	600	165	30	620	521	562	290	1 1/8	1 1/8	78	70
DMOUCD032	1225	1142	325	1177	26	520	600	165	30	620	571	612	290	1 1/8	1 1/8	88	80
DMOUCD050	2095	1088	325	2047	26	520	600	165	30	620	532	1048	290	1 3/8	1 3/8	151	135
DMOUCD075	2738	1088	325	2690	26	670	720	165	180	620	532	1380	290	1 3/8	1 3/8	234	210

*BASED ON AC FANS, MAY VARY FOR EC FANS ** THIS DIMENSION IS IMPORTANT TO "X" (HOT GAS) ⊕ CENTRE OF GRAVITY ⇨ AIRFLOW DIRECTION

REVISIONS

01	07/02/17	J. BOXHALL	UPDATED NOTES
02			
03			
04			
05			

Responsible dept: DUK Construction
Technical reference:
Document type: Customer DWG
Material: N/A
Created By: Philo.Matthew
Reviewed:
Approved:
Document state:
Scale (main): NTS
Scale (sub): NTS

DencoHappel

Title: CUSTOMER GA- DMOUCD HORIZONTAL AIRFLOW

80035460

Revision: 0 1
Date: 07.01.14
Lang.: E N
Sheet: 1 of 1