

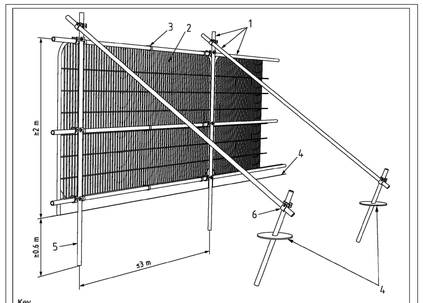

Key

1 Standard scaffold poles
2 Heavy gauge 2 m tall galvanized tube and welded mesh infill panels
3 Panels secured to uprights and cross-members with wire ties
4 Ground level
5 Uprights driven into the ground until secure (minimum depth 0.6 m)
6 Standard scaffold clamps

Figure 1

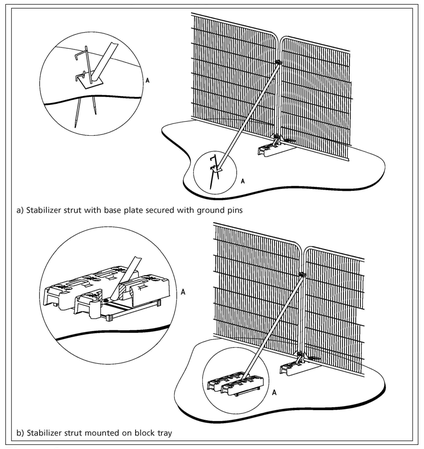

a) Stabilizer strut with base plate secured with ground pins

b) Stabilizer strut mounted on block tray

Figure 2

TREE PROTECTION AREA KEEP OUT!

TREES ENCLOSED BY THIS FENCE ARE PROTECTED BY PLANNING CONDITIONS

THE FOLLOWING MUST BE OBSERVED BY ALL PERSIONS:-

- THE PROTECTIVE FENCING MUST NOT BE REMOVED OR PUSHED BACK
- NO PERSONS SHALL ENTER THE PROTECTED AREA
- NO MACHINE OR PLANT SHALL ENTER THE PROTECTED AREA
- NO MATERIALS SHALL BE STORED IN THE PROTECTED AREA
- NO SPOIL SHALL BE DEPOSITED IN THE PROTECTED AREA
- NO EXCAVATIONS SHALL OCCUR IN THE PROTECTED AREA

ANY INCURSION INTO THE PROTECTED AREA MUST BE WITH THE WRITTEN PREMISSION OF THE LOCAL PLANNING AUTHORITY

Figure 3

EXCAVATIONS WITHIN RPA

Where excavations works for foundations fall on the edge of the RPA then these should be carried out by a competent contractor with an understanding of trees. Any excavtions close to trees should be carried out from within the main body of the site working in (and away) from the tree. Machinery should not encrouch into the RPA and protected by the fencing.

For any trees which require excavations within the the RPA then water the tree a few days before works are carried out, making sure the ground is moist within the drip line of the tree (only required during the growing season).

Excavations can be carried out with a mechanical digger however these must be supervised by a grounds man to signal if tree roots >40mm are exposed. If roots are identified on site which encroach into the area to be excavated then these must be cut. Ensure cuts are done with hand tools that will make clean, quick cuts (ie.chain saw axe), at no points should roots be ripped or dragged out by a mechanical digger. Make sure cut roots are covered with loose soil or woodchips as soon as possible.
Water the tree again thoroughly when job is done (only required during the growing season).

SITE WORKS - PRE CONSTRUCTION OF DEVELOPMENT
Temporary roads, site storage and staff parking should be located outside of the RPA (within existing non compacted areas) and should only be implemented after the tree protection fence has been erected.

SITE WORKS - POST CONSTRUCTION OF BUILDINGS
Tree protection fence should only be pushed back or removed to allow the installation of hard/soft surfacing within the RPA once all major construction works have finished and heavy machinery has been removed off site.

Areas of proposed surfacing over the RPA should be carried out to a 'No Dig' construction method inline with detailed construction details from an engineer. Surfacing should be constructed over existing levels to avoid excavations within the main body of the RPA.
Fencing within RPA should be timber posts set in concrete. These post holes should be dug by hand and should be located avoiding any major roots.

OD STATEMENT

This method statement has been produced from current guidelines BS5837:2012 Trees in relation to design, demolition and construction recomondations.

If in doubt on any issues relating to the retention and protection of the existing trees on site please contact TPM Landscape (project arboriculturist) on 0161 235 0600 or the local Tree Officer.

The appointed contractor should consider and fallow this recommendations whilst working on the project. The appointed contractor must consult the project arboriculturalist who will oversee any critical operations close to the existing trees and make checks to ensure that the tree protection fence and working methods as described below are adhered to.

TREE WORKS
All tree works should be carried out by a qualified arboriculturalist prior to any construction works starting on site. Only carry out trees works which are shown on the planning approved drawing, any further works that need to be carried out require written approval from the local authority and should be advised by the project arboriculturalist. Areas of scrub, bracken and bramble should be strimmed to 0.1m in Sept-October and the arisings removed to discourage hedgehogs and amphibians from settling in this area prior to heavy machinery entering the site and the full clearance works begin.

Tree works should be carried out outside of the bird nesting season (typically March-August) unless the trees and scrub has been surveyed by a qualified ecologist to look for active bird nests. If identified the area should be left undisturbed and fenced off (inline with ecologists recommendations) until the chicks have fledged.

FENCE INSTALLATION
This method statement has been produced from current guidelines BS5837:2012 Trees in relation to design, demolition and construction recommendations.

All trees as shown to be retained on the approved plan should be protected by a tree protection fence before any materials or machinery are brought onto the site, and before any demolition, development or stripping of topsoil commences. Please refer to drawing for location of fencing and Figures 1 + 2 for the specification of the Tree Protection Fence. All-weather notices should be attached to the barrier with words such as: "TREE PROTECTION AREA KEEP OUT", please refer to Figure 3 for an example of signage.

It should be confirmed by the project arboriculturalist that the barriers and ground protection have been correctly set out on site, prior to the commencement of any operations.

The protected area should be regarded as sacrosanct, and, once installed barriers (unless identified on the drawing) should not be removed or altered without prior approval by the project arboriculturist and/ or Pendle Borough Council.

LEGEND

Existing Tree to be Retained
Trees to be retained and protected in line with BS5837:2012. Please refer TPM Tree Survey Report and Arboricultural Impact Assessment for more information.

Existing Tree to be Removed
For condition and category grading of individual trees to be removed please refer to TPM 3185 501 Tree Survey Report and drawing 3185 101 Tree Survey.

Root Protection Area (RPA)
RPA calculated inline with BS5837:2012

Proposed Tree Protection Fence
To be installed prior to any enabling works on site and to remain in position during construction of proposed building and landscape works. Please refer to figures 3 and 4.

GENERAL NOTES

1. This drawing is the copyright of tpm landscape Ltd and cannot be reproduced in any form without the consent of the company.
2. This drawing is to be read in conjunction with detail landscape drawings, details and specification.
3. This drawing is to be read in conjunction with all relevant Architects', Engineer's, Specialists, Bills of Quantities and Specifications.
4. The insertion of any firm or proprietary brand on this drawing is an indication of the class or quality required and does not exclude the use of alternative materials that are equal in performance, quality and appearance, provided that they have been approved in writing by the Landscape Architect.
5. The Contractor is responsible for accurately ascertaining the position of underground services and responding to all relevant service easement requirements.
6. All dimensions are in millimetres unless stated otherwise, for the purposes of construction this drawing must not be scaled and only written dimensions used. Written and scaled dimensions to be checked on site, any discrepancies reported prior to work commencing. IF IN DOUBT PLEASE ASK.
7. All work and materials are to be in accordance with the relevant British Standards and Code of Practice.
8. All Proprietary products are to be used strictly in accordance with the manufacturer's instructions and details.

REVISION NOTES

Rev	By	Description	Date
-	-	-	-

Client
One Manchester

Project
Moston, Manchester

Description
Phase 1 Demolition - Tree Protection Plan

Status
For Approval

Scale @ A1	Drawn	Checked	Date
1:500	SH	KP	15.06.20
Job number	Drawing number		Revision
3647	102		-

N

tpm landscape
chartered landscape architects
address: 4th Floor Studio 10 Little Lever St Manchester M1 1HR
tel: 0161 235 0600 fax 0601 email info@tpmlandscape.co.uk