Discharge of Planning conditions for: 122133/LO/2018

49-51 Dale Street

Manchester,
M1 2HF

Boohoo Disabled Access

September 2020

architecture:m

RIBA Chartered Practice

a: Moravian College
14 Fairfield Square
Manchester
M43 6AD
t: +44 [0] 161 370 6166
e: mail@architecturem.co.uk
w: www.architecturem.co.uk

Contents

1. Condition 01
2. Condition 02
3. Condition 03

Responses are marked in **RED**.

Condition 01

1. The development must be begun not later than the expiration of three years beginning with the date of this permission.

This will be done

Condition 02

2. The development hereby approved shall be carried out in accordance with the following drawings and documents:

Site Location Plan, stamped as received by the City Council as local planning authority on 14 December 2018.

Drawing Nos. 100 REV A, 101, 102, 103, 104, 111 REV A, 121 REV A, 122, 200 REV A, 211 REV A, 212 REV A, 221 REV A, stamped as received by the City Council as local planning authority on 01 February 2019.

Boohoo Disabled Access (December 2018), stamped as received by the City Council as local planning authority on 01 February 2019.

Heritage Statement, stamped as received by the City Council as local planning authority on 01 February 2019

This will be done

Condition 03

3. Notwithstanding the details as set out in condition 2 above no development shall commence until final details (including where appropriate specification and method statement) of the following have been submitted to and approved in writing by the City Council as Local Planning Authority:

(a) Submission of existing and proposed detail of external door;

(b)Submission of door specifications including any necessary update or change in installation methodology previously submitted; and

(c) Submission of details regarding associated push pad for disabled access.

The development shall be implemented in accordance with the submitted and approved details and retained thereafter.

Condition 03(a)

(a) Submission of existing and proposed detail of external door;

Existing external window detail

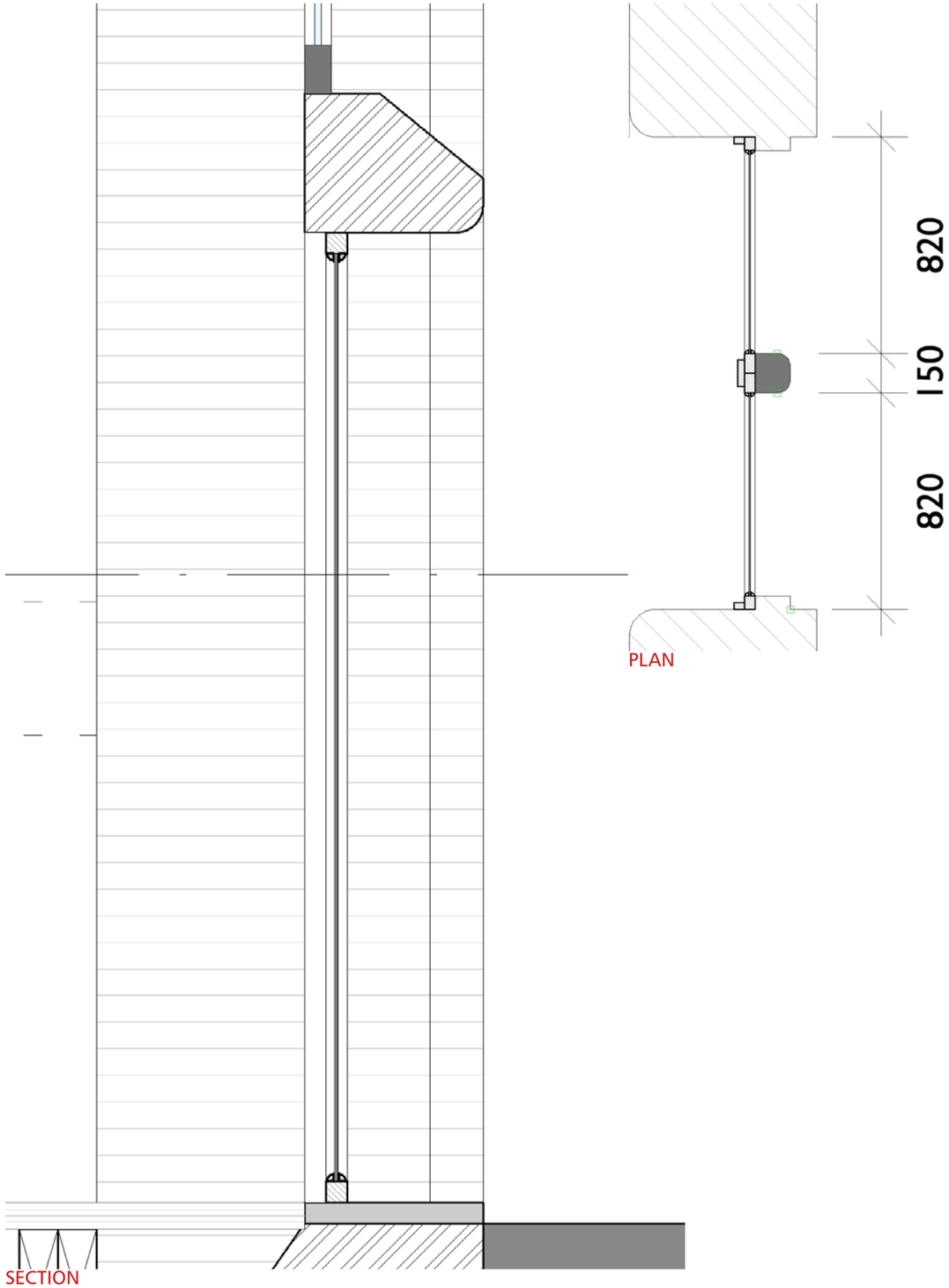

Proposed external door detail

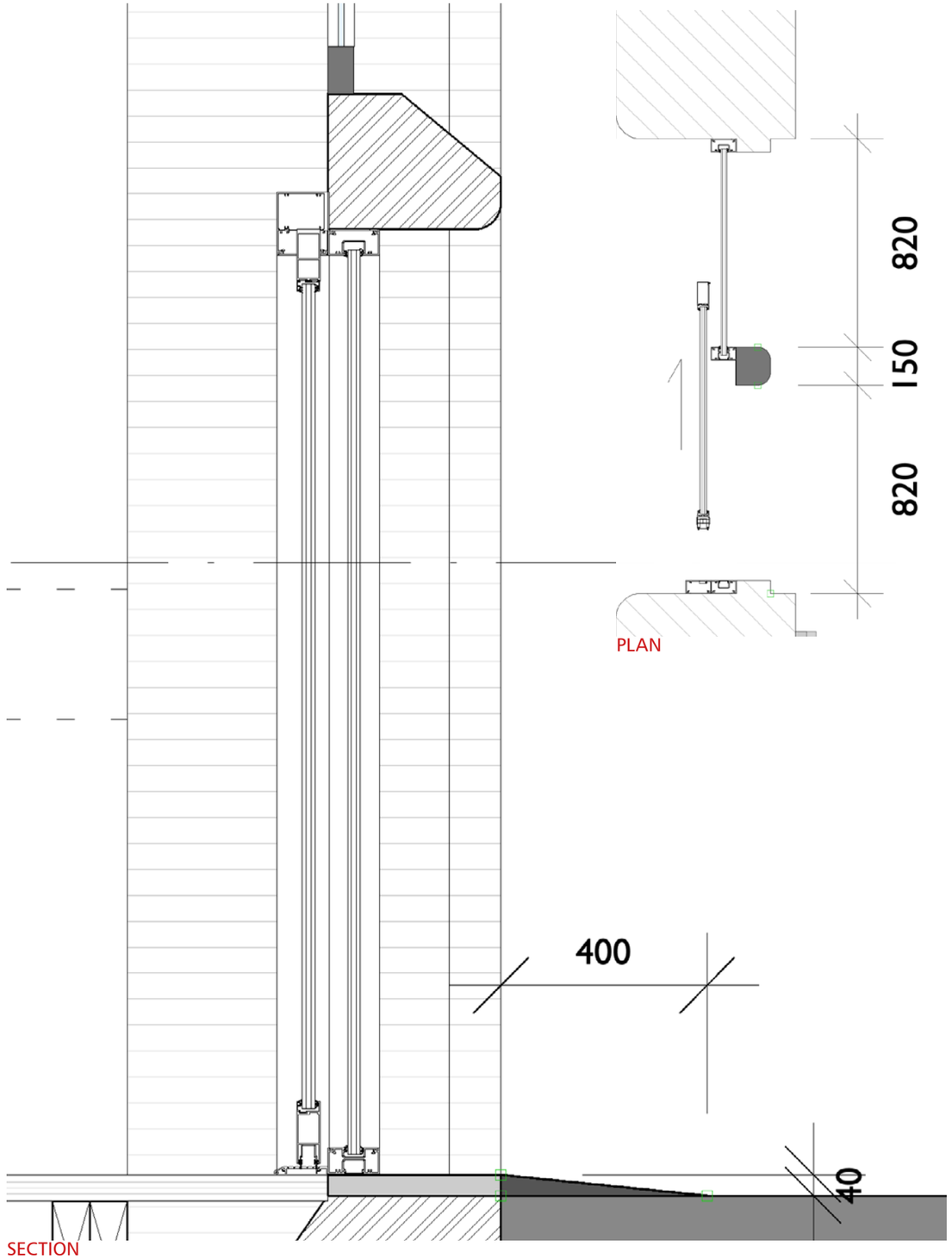

Condition 03(a)

(a) Submission of existing and proposed detail of external door;

DDA ACCESS OVER WINDOW CILL AT STREET LEVEL

The height of the cill is 40mm from street level to the top of the cill.

A person requiring the use of the DDA lift will press the bell button on the Paxton Entry System, to ring through to concierge who will be based at the main entrance, 10m away from the DDA access door.

The concierge will remotely unlock the door, allowing it to slide across granting access to use the lift. Once the concierge has unlocked the door and while it's opening, they will bring outside a portable ramp which will allow person in the wheelchair to easily gain access over the cill lip.

This method prevents any alterations to the existing cill, retaining it's appearance from the Dale St elevation and it's heritage assets. Altering the cill to accommodate a permanent ramp would be deemed invasive to it's appearance. There will always be concierge present during business hours who's duty it is to provide a layer of security and be aware of who is entering the building.

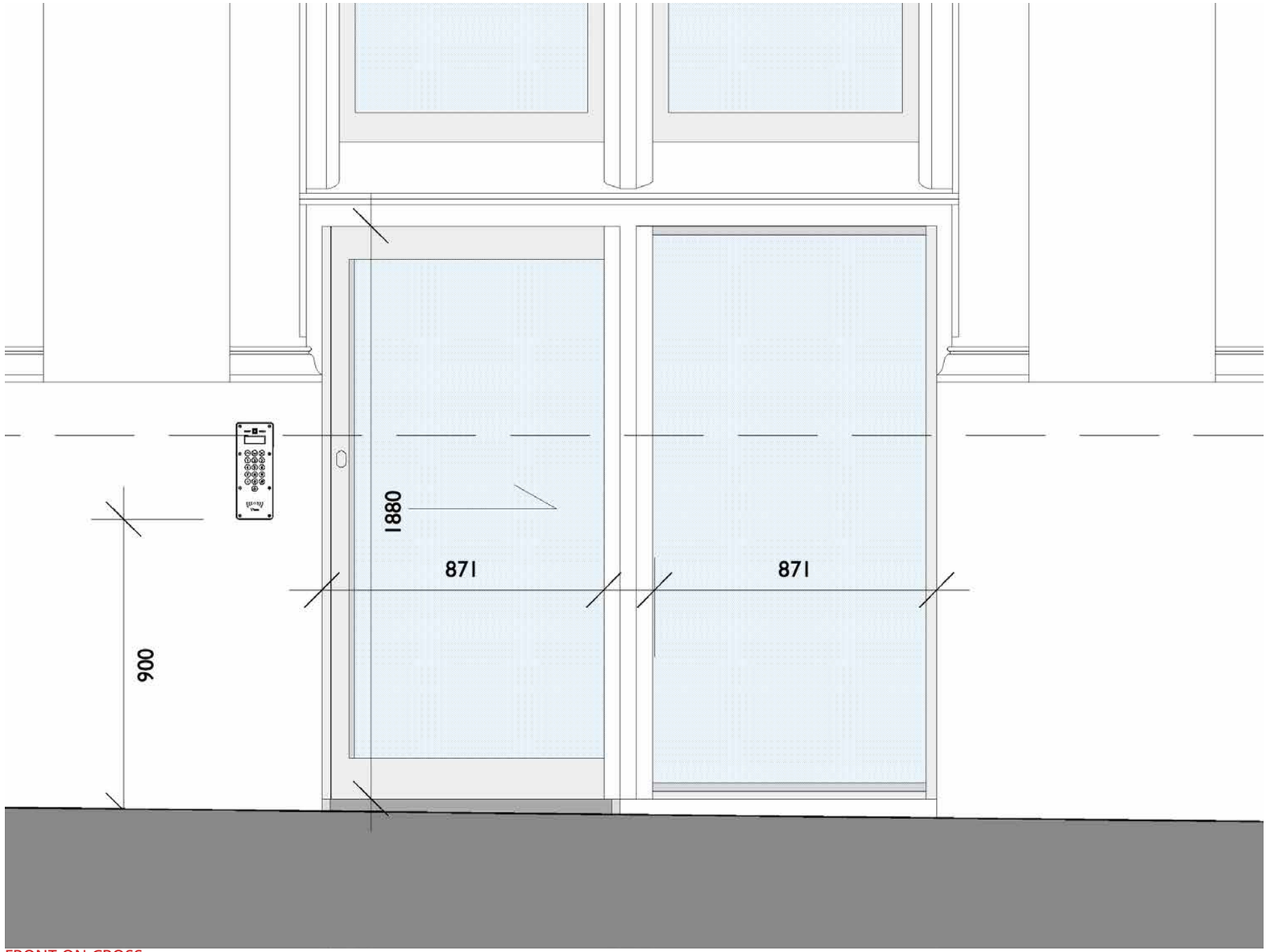

FRONT ON CROSS SECTION

DOOR COLOUR TO MATCH SURROUNDING EXISTING WINDOWS

Condition 03(b)

(b)Submission of door specifications including any necessary update or change in installation methodology previously submitted;

DOOR AND WINDOW SPECIFICATION
Senior SFG-SD Double glazed fixed bead SD581 in colour RAL 3009 to match surrounding existing windows

Central vertical mullion between sliding door and fixed pane is hidden behind the existing stone mullion to give a flush / minimal appearance.

DDA user will operate the door by requesting access with the Paxton Entry. Reception will unlock the door remotely to slide across, granting access to the lift.

The sliding door will slide behind the fixed pane providing clear uninterupted access to the lift.

Please see document: Boohoo Automated entrance MS -Covid-19

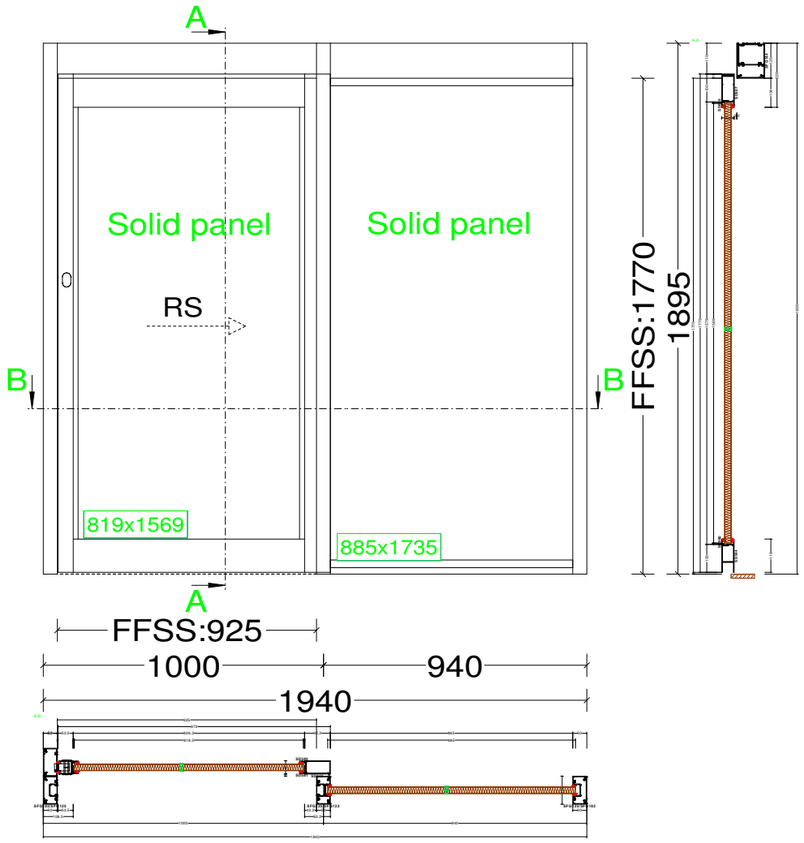

Door closed

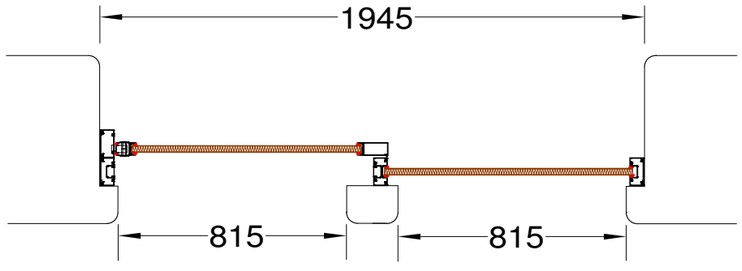

External Face

PROPOSED DOOR SPECIFICATION

Door open

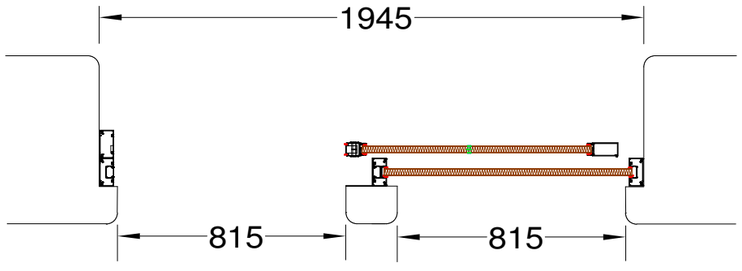

External Face

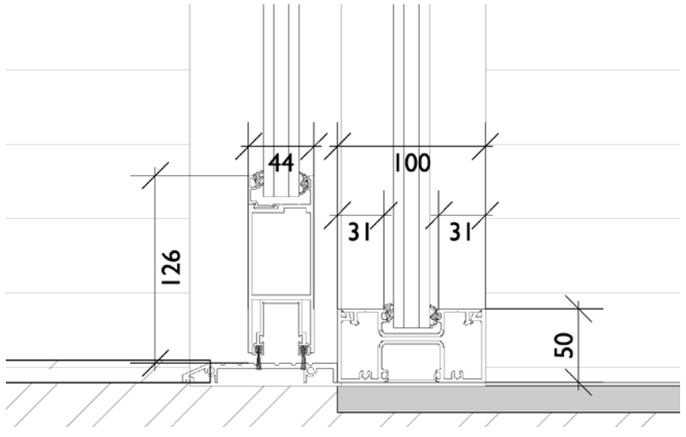

DETAIL OF DOOR SPECIFICATION

Condition 03(b)

DOOR AND WINDOW INSTALLATION METHOD STATEMENT

All steps to the method statement must be done in a careful and sensitive manner, and to ensure no harm or damage is done to the surrounding structure and opening.

Installers are to be fully trained to BS 7036 / EN16005 standards and fully comply with CITB.

Existing Timber Window Removal

The removal of the existing timber window must be done carefully without the use of mechanical equipment and with due care and diligence as to not damage the structural surround and opening.

- Existing external board covering existing window to be carefully removed by hand using non-mechanical methods.
- Internal window casing to be removed ensuring no damage is done to the surrounding structure and opening.
- Top rail is to be removed, followed by side stiles ensuring the glazing pane remains in place and not to fall out.
- Once side stiles are removed, gently lift the glazing pane out of the window bottom rail.
- Bottom rail can now be removed once the glazing is fully and safetly removed.
- Once this has been achieved for both windows, carefully remove the central timber mullion followed by the top window head, then side jambs follwed by the removal of the bottom cill.

Installation of new aluminium window and sliding door

- Windows and doorsets should be installed plumb and square within the aperture, without twist, racking or distortion of any member in accordance with the manufacturer's recommended tolerances, to operate correctly after installation and in accordance with the surveyor's instructions.
- Installation of the new glazed window must be set back within the reveal to the same position as the previously removed timber window with correct movement gap provided.
- Installation packers should be used adjacent to fixing positions to prevent outer frame distortion during the installation process, and should be resistant to compression, rot and corrosion. The should span the full depth of the outer frame. The frame should be tightened so that the frame is held securely against the packers. Over tightening can lead to distortion and should be avoided. Some lugs may be required to be packed off the substrate to prevent distortion.
- Any debris or contaminants should be removed and any drainage paths cleared. Sealant must not be applied on top of loose material, with protective taps removed as soon as practicable.

Condition 03(b)

FRONT ELEVATION [DALE ST]

Condition 03(c)

(c) Submission of details regarding associated push pad for disabled access.

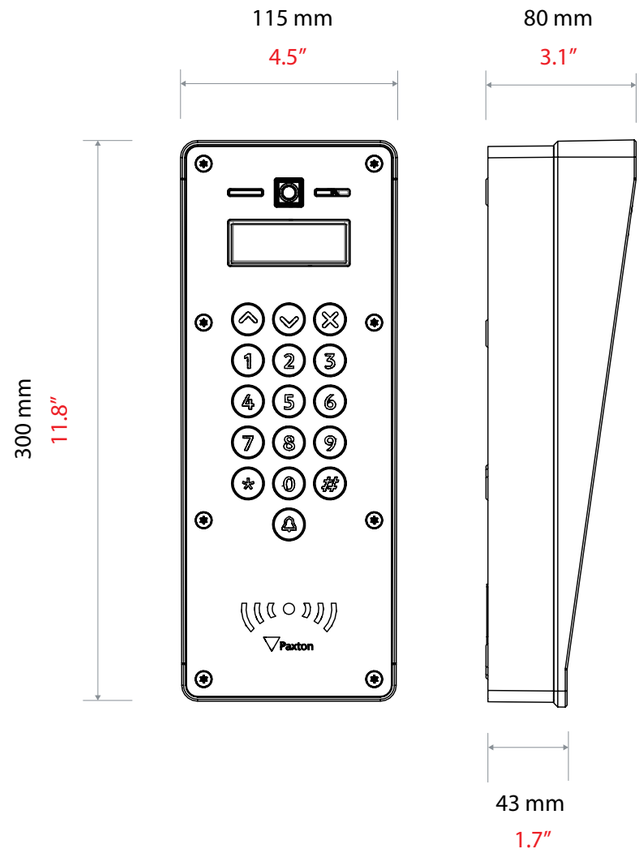

Paxton Entry – Standard panel, surface mount with rain hood

The surface mounted option provides a non-invasive installation method. Installing a recessed mounted option would involve cutting into the existing facade stonework which would affect the heritage assets and aesthetics.

If it was to be updated to a newer model in the future, the surface mounted version can easily be replaced whilst the recessed version would require further works as the recess would already be cut out.

Manufacture's Information:

About – The Entry standard panel is a robust external panel for use with Paxton's door entry system, Entry. This panel comes in industry recognised anthracite grey (RAL7021).

All Entry panels are IPX5 rated, making them suitable for external use in all weather conditions.

Installation – Entry components simply interconnect using Cat5 or standard RJ45 terminated patch cables. Entry can also utilise existing network infrastructure for simple installation. PoE technology runs power and data along the same cable to avoid the need for separate power supplies.

The surface mount version of this panel enables installation of the unit directly on the surface of the wall so that it is protruding and 100% exposed. For multiple panel entrances, more than one panel can be associated with an ACU.

Operation – A visitor initiates a video call via the bell button on the external panel. Visitor access can be granted via the Entry monitor, which features an intuitive touchscreen user interface.

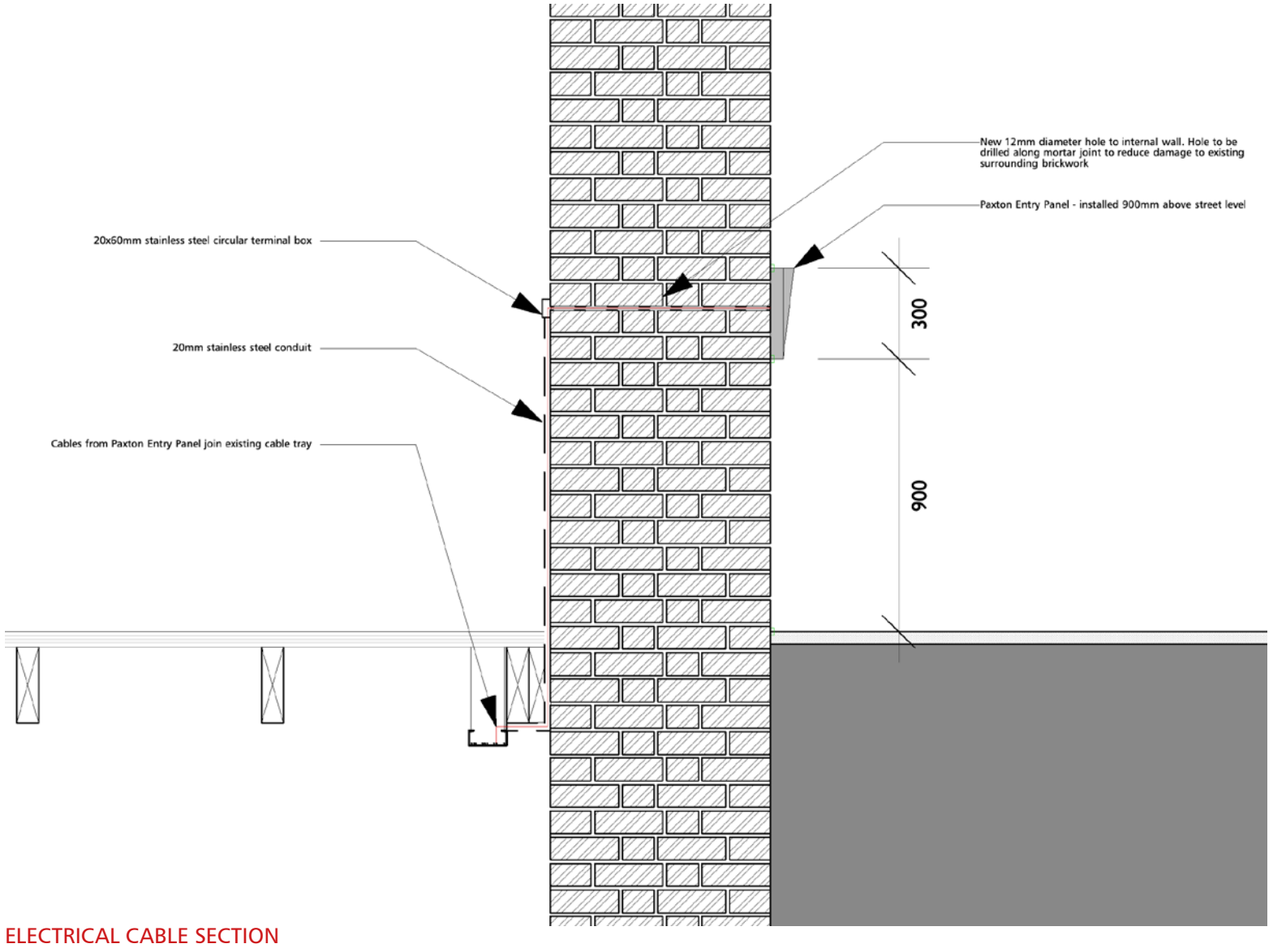

ELECTRICAL CABLE SECTION

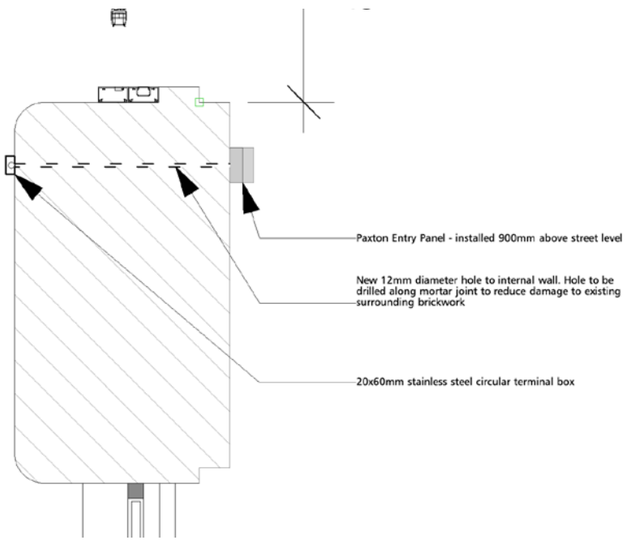

ELECTRICAL CABLE PLAN

Paxton

DS1059

Entry Panel

System specifications

Power over Ethernet (PoE)	Yes - IEEE 802.3af class 0
Ethernet bandwidth requirement	1Mb/s multicast per panel during call
Panels per system	100
TCP/IP ethernet extension limit	100m/328ft
Cable type	CAT5
Token compatibility	Paxton, EM4100/02, MIFARE®, MIFARE ® Classic, MIFARE® DESFire® EV1, MIFARE Plus®, MIFARE Ultralight®, MIFARE Ultralight C®, MIFARE Mini®, HID® Prox (activiation required)

Other hardware features

Audio system	Two way
Camera system	Full colour
Back-lit keypad/LCD	Yes
PIN/Code entry	Yes - only in conjunction with Net2 software & Paxton10
Bluetooth® compatibility	Yes - only in conjunction with Paxton10
Bluetooth modes	'Token mode' - (Present credential to reader) 'Touch to enter' - (Smart credential or Hands free Keyfob in pocket) 'Longe range' - (Smart credential or Hands free Keyfob (Up to 10m)) 'Bluetooth off'
Proximity entry	Yes
IDC connector	Optional
Colour	RAL 7021 (Anthracite grey)
Material	ABS / Polycarbonate

Environment

Operating Temperature	-20°C - +50°C -4°F - +122°F
Moisture resistance	IP55
Vandal Resistance	IK08

The Entry panel is a robust door entry panel incorporating both door entry and access control functions. It is powered using power over Ethernet (PoE) and communicates with the other elements of the system using IPv6, providing 'plug and play' installation. Each panel is associated with a Entry control unit which is the interface to the door hardware.

The panel is equipped with a keypad and a proximity token reader. A resident can use either the keypad or a token to gain entry. Installers gain access to the menu options using an engineer code or an engineer token.

Net2 or Paxton10 software can be used to administer the access control functions.

Decide how the units are to be connected. You can either run your own wired network or (with the owner's permission) share the buildings existing data network. If using the owners network, the system uses IPv6 protocol and PoE (Power over Ethernet) so the network must support this switch type.