Tree Protection Fencing (BS5837: 2012)

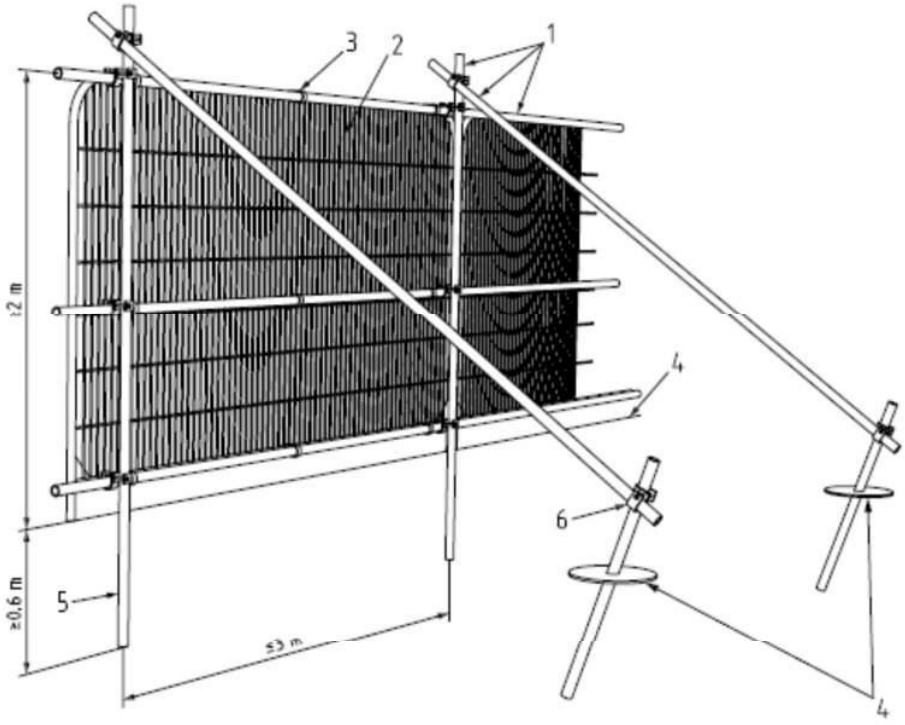

Key

1 Standard scaffold poles
2 Heavy gauge 2 m tall galvanized tube and welded mesh infill panels
3 Panels secured to uprights and cross-members with wire ties
4 Ground level
5 Uprights driven into the ground until secure (minimum depth 0.6 m)
6 Standard scaffold clamps

Ground Protection

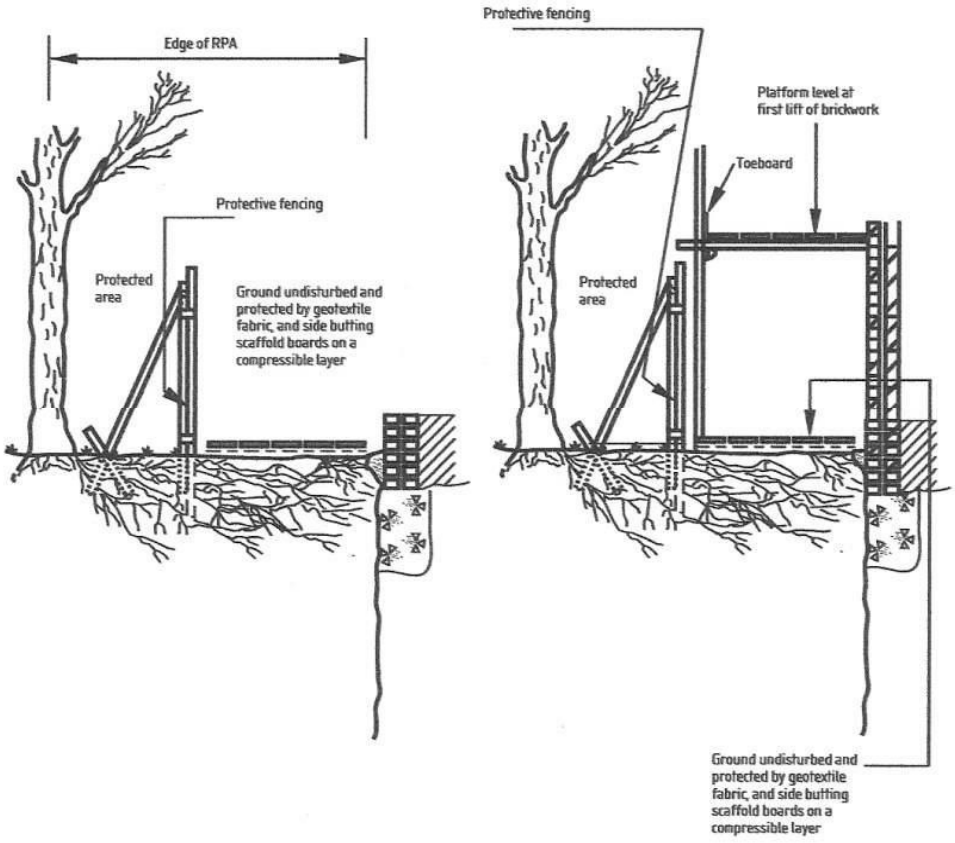

Ground protection and scaffolding within the RPA (taken from BS5837:2005)

FIGURE 1 – Tree Protection Zone

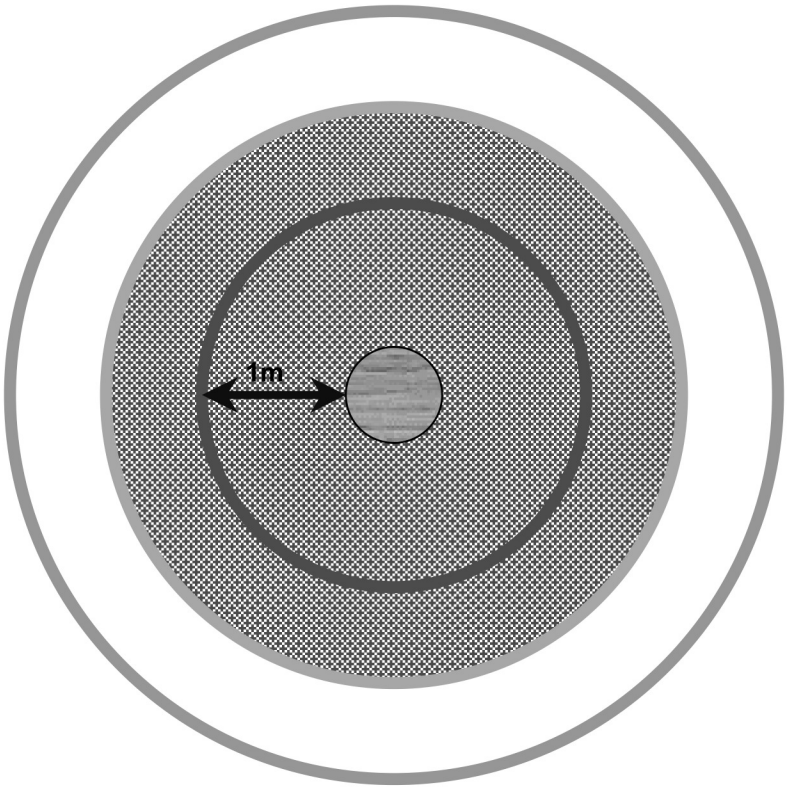

Key

Trunk of tree

Canopy or branch spread

PROHIBITED ZONE – 1m from trunk. Excavations of any kind must not be undertaken within this zone unless full consultation with the local authority Tree Officer is undertaken. Materials, plant and spoil must not be stored within this zone.

PRECAUTIONARY ZONE - beneath canopy or branch spread. Where excavations must be undertaken within this zone the use of mechanical excavation plant should be prohibited. Precautions should be undertaken to protect any exposed roots. Materials, plant and spoil should not be stored within this zone. Consult with the local authority Tree Officer if in any doubt.

PERMITTED ZONE – outside of the precautionary zone. Excavation works may be undertaken within this zone, however caution must be applied and the use of mechanical plant limited. Any exposed roots should be protected.

© NJUG Ltd and its licensors – August 2007