This drawing is the property of Baltimore Aircoil Company. It is not to be copied or used, directly or indirectly, in whole or in part, to assist in making or to furnish any information for the making of drawings or other reproductions hereof, or for the making of any part or component part shown therein, without the written consent of Baltimore Aircoil Company. This drawing is loaned with the expressed agreement that the drawing and information contained therein are the property of Baltimore Aircoil Company. The acceptance of this drawing will be construed as an acceptance of the foregoing agreement.

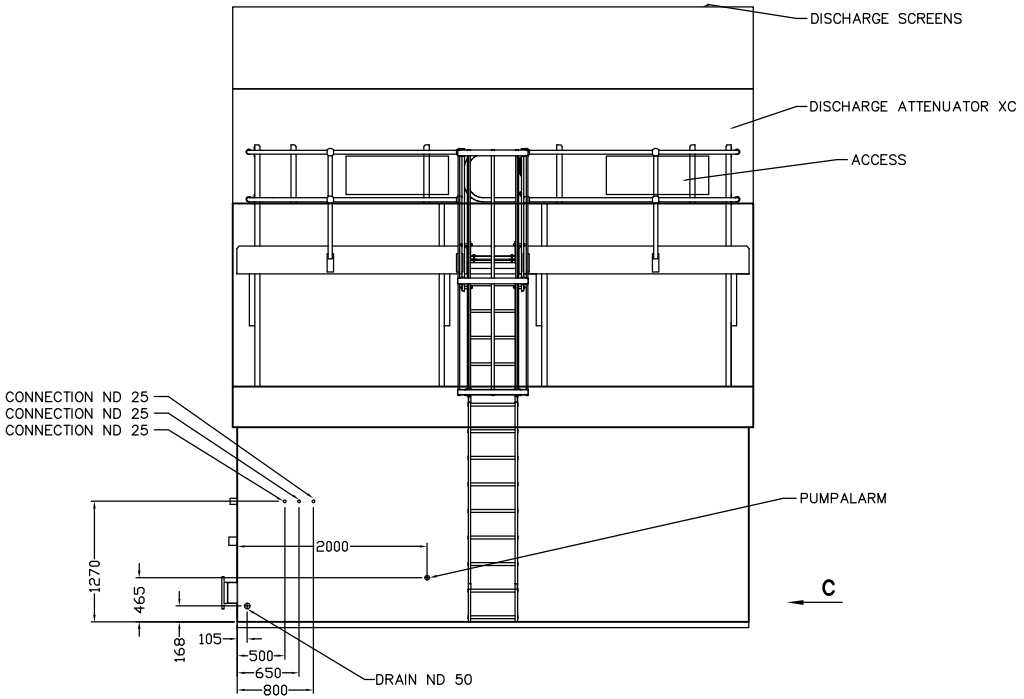

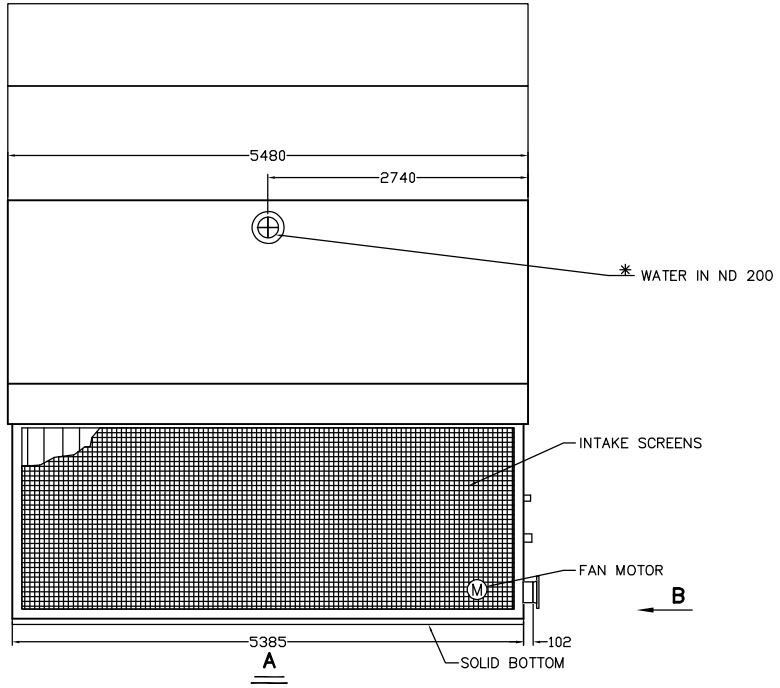

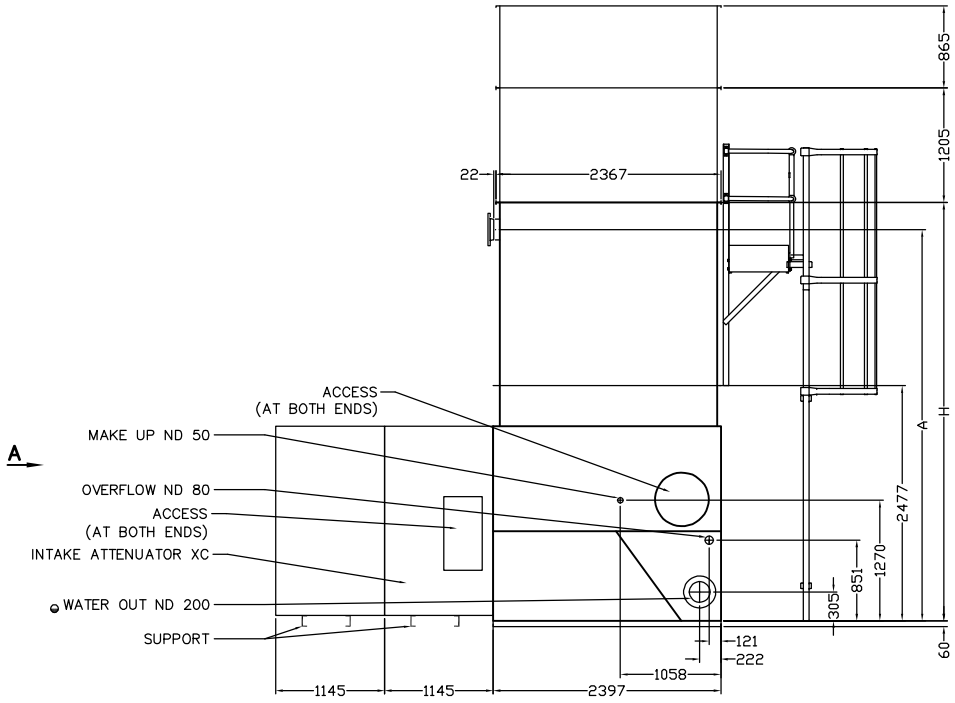

✱ WITH FLANGE DIN 2632 PN 10 (SHIPPED LOOSE)

● WITH FLANGE DIN 2632 PN 10 (INSTALLED)

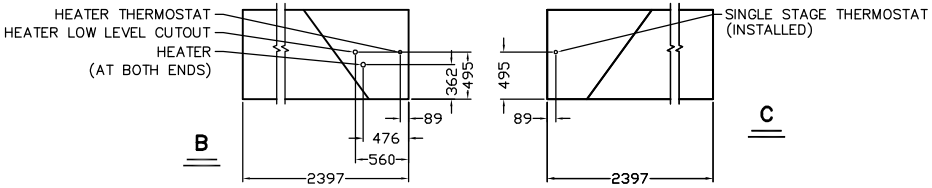

VT1_0818-03Q	2775	8730	11390	4200	4437
MODEL NO.	HEAVIEST SECTION	SHIPPING WEIGHT	OPERATING WEIGHT	"A"	"H"

NOTES :
1. ALL DIMENSIONS ARE IN MM, WEIGHTS IN KG.
2. ALL CONNECTIONS THROUGH ND100 ARE BSP MALE THREAD (DIN2999), CONNECTIONS LARGER THAN ND100 ARE BEVELED FOR WELDING.
3. ALL DIMENSIONS ARE APPROXIMATE AND CANNOT BE USED FOR PRE-PIPING.

NO.	DATE	REVISIONS	DWG.BY	DATE	COOLING TOWER	
			JOUY	03/02/21		
			CHKD'D.BY	DATE	BAC.Ser.no. H210262201	Arrangement LH

BALTIMORE AIRCOIL INTERNATIONAL N.V.
HEIST-OP-DEN-BERG, BELGIUM
www.BaltimoreAircoil.com
© 2020 Baltimore Aircoil International n.v.

CUSTOMER
BCH (ROCHDALE) LIMITED

DWG. NO.
H2102622_CP_01_R0