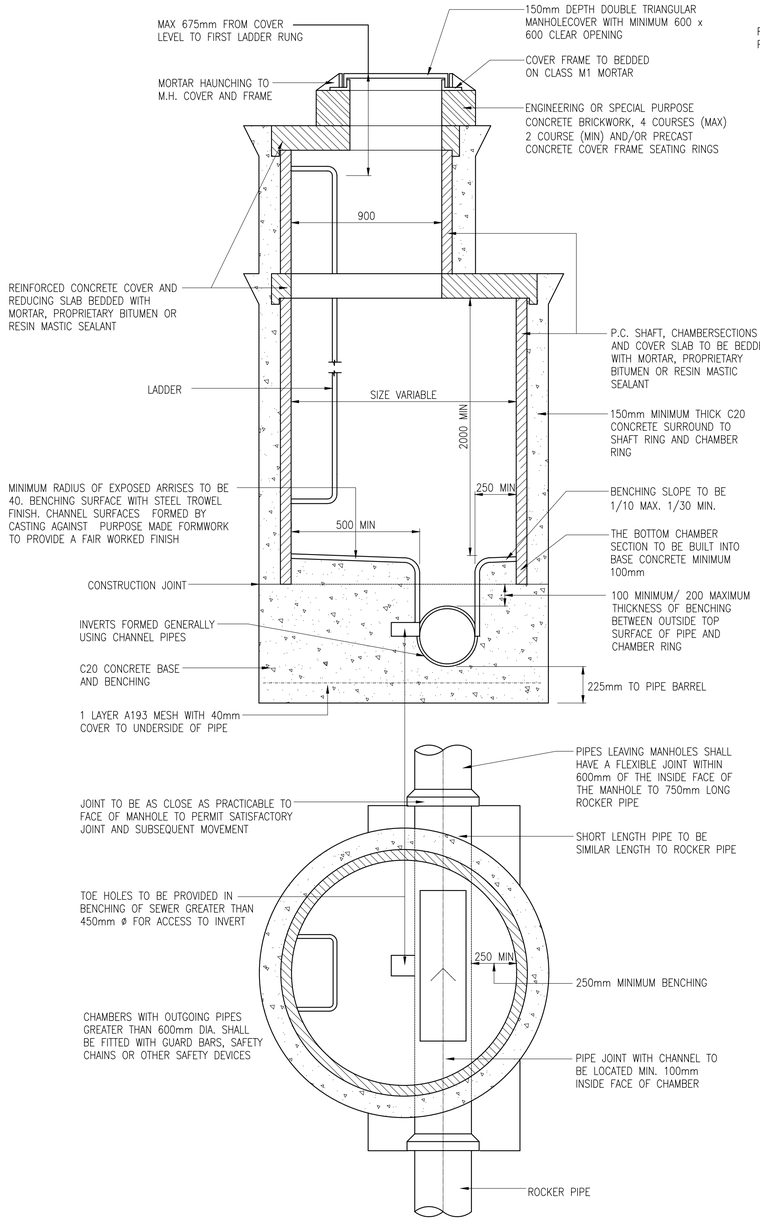

TYPICAL MANHOLE TYPE A

(DEPTH TO SOFFIT 3–6m)

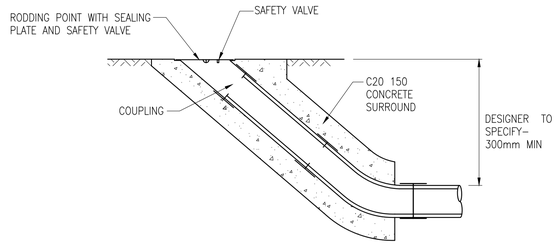

RODDING EYE DETAIL

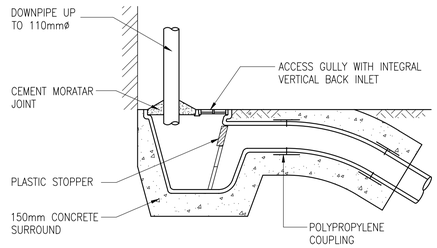

ACCESS GULLY DETAIL

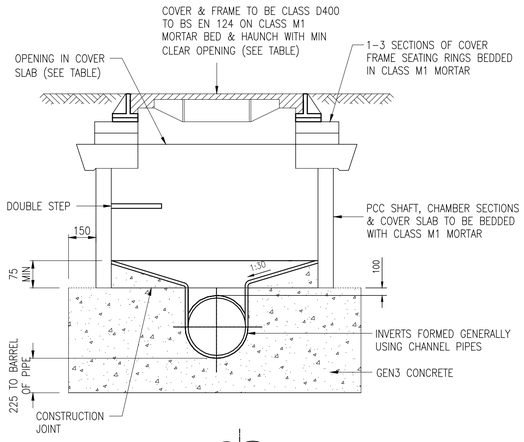

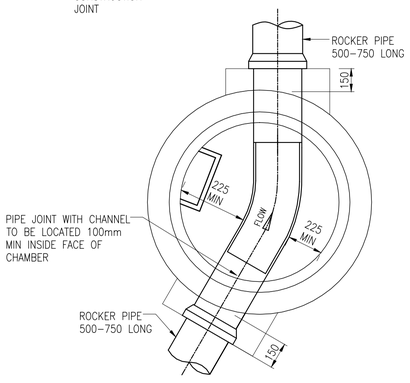

TYPICAL MANHOLE TYPE E

(MAX. DEPTH FROM GROUND LEVEL TO SOFFIT OF PIPE <1.5m)

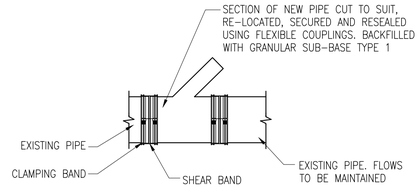

A SUITABLE SECTION OF PIPE IS CUT AND REMOVED FROM THE EXISTING PIPELINE, THE NEW JUNCTION IS LOCATED, THE ORIENTATION OF THE JUNCTION ARM ESTABLISHED AND THE NEW JUNCTION SECURED AND SEALED INTO THE PIPELINE USING FLEXIBLE COUPLINGS

NOTE

1. THE REPLACEMENT PIPE OR JUNCTION SHOULD LEAVE A TOTAL LENGTH OF 20MM LESS THAN THAT BETWEEN THE CUT ENDS OF THE EXISTING PIPELINE.
2. COUPLINGS SHOULD BE TIGHTENED EITHER STARTING WITH THE SHEAR BAND FOLLOWED BY THE CLAMPING BANDS OR WORKING ACROSS THE COUPLINGS FROM ONE OF THE CLAMPING BANDS.
3. IT IS IMPORTANT TO ENSURE THAT THE ENDS OF THE PIPES ARE CUT SQUARE AND THAT THERE IS SUFFICIENT CLEARANCE BETWEEN THE ENDS OF THE PIPES TO ALLOW FLEXIBLE MOVEMENT TO TAKE PLACE.

JUNCTION INSERTION

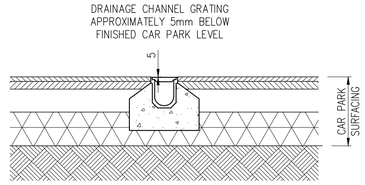

SECTION THROUGH DRAINAGE CHANNEL

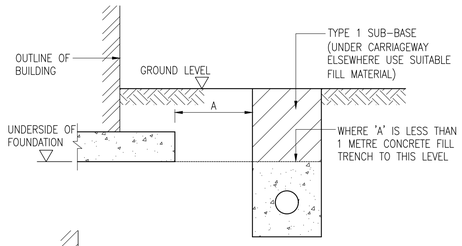

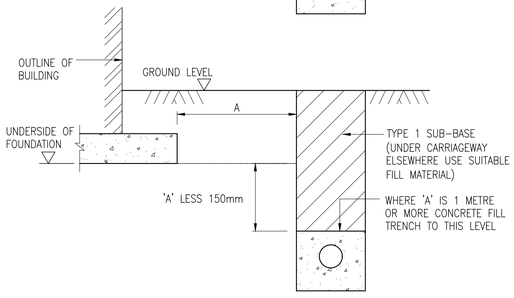

TRENCH DETAIL FOR FW AND SW PIPE RUNS NEAR BUILDING FOUNDATIONS

GENERAL NOTES

1. ALL DIMENSIONS ARE IN MILLIMETRES UNLESS OTHERWISE SHOWN
2. ALL ADOPTABLE DRAINAGE SHALL BE CONSTRUCTED IN ACCORDANCE WITH 'SEWERS FOR ADOPTION' 6TH EDITION 3. 4. 5. 6. 7. 8. 9. 10. 11.
3. ALL EXISTING INVERT LEVELS TO BE CHECKED BY THE CONTRACTOR AT THE START OF WORKS AND ANY OTHER DISCREPENCIES NOTIFIED TO THE ENGINEER. ALL LEVELS ARE BASED ON TOPOGRAPHICAL SURVEY INFORMATION PROVIDED BY OTHERS.
4. ALL MATERIALS TO BEAR THE RELEVANT B.S. KITEMARK AND COMPLY FULLY WITH THE SPECIFICATIONS. ALL CONCRETE & CONCRETE PRODUCTS MUST USE SULPHATE RESISTANT CEMENT (UNLESS THE SITE INVESTIGATION REPORT PROVES THAT SULPHATE ATTACK FROM SOILS AND GROUNDWATER WILL NOT OCCUR TO WITHSTAND A CLASS 3 CONDITION).
5. ALL OPENING NOTICES ETC. AS REQUIRED UNDER HIGHWAYS ACTS ETC. ARE TO BE OBTAINED PRIOR TO COMMENCEMENT OF WORKS. ALL WORKS ARE TO BE INSPECTED BY L.A., NHBC OR UNITED UTILITIES AS APPLICABLE.
6. WHERE "ULTRA RIB" UPVC PIPES (OR SIMILAR APPROVED) ARE USED IN ADOPTABLE DRAINAGE THEY SHALL STILL BE HANDLED AND LAID IN ACCORDANCE WITH THE SPECIFICATION AND GUIDANCE ISSUED BY THE HIGH PERFORMANCE PIPE ASSOCIATION. A CLASS S BED AND SURROUND MUST BE USED FOR SUCH PIPES.
7. TRENCH BACKFILL IN HIGHWAYS / CAR PARKS TO WITHIN 1M OF HIGHWAY SHALL BE A SUITABLE GRANULAR MATERIAL ALL IN ACCORDANCE WITH SEWERS FOR ADOPTION CL. 3.3.4. BACKFILL MATERIAL IN OTHER AREAS SHALL BE SELECTED EXCAVATED MATERIAL FREE FROM STONES LARGER THAN 40MM, LUMPS OF CLAY OVER 100MM, TIMBER, FROZEN MATERIAL OR VEGETABLE MATTER.
8. UPVC PIPES AND FITTINGS SHALL COMPLY WITH WIS 4–35–01. CLAY PIPES AND FITTINGS SHALL BE EXTRA STRENGTH TO BSEN 295 AND BS 65. CONCRETE PIPES AND FITTINGS SHALL COMPLY WITH BS 5911 , PIPES SHALL BE CLASS H.
9. A CLASS S BED MUST BE PROVIDED TO UPVC PIPES , A CLASS B BED MAY BE USED FOR V.C. AND CONCRETE PIPES.
10. INSPECTION CHAMBERS SHALL BE:

    TYPE A – 250mmø UPTO 0.6m DEEP (GARDEN DRIVE AREAS ONLY)
    TYPE B – 450mmø 0.6 – 1.5m DEEP (GARDEN DRIVE AREAS ONLY)
    TYPE C – 1200mmø 1.2 – 3m DEEP
    TYPE D – 450mmø WITH 350mm CATCHPIT

11. BACKFILL TO DRAINAGE TRENCHES ABOVE PIPE BEDDING AND SURROUND WITHIN ROAD AND CAR PARK AREAS TO BE GRANULAR FILL COMPLYING WITH CLASS 6F2 OR DOT TYPE 1 OR QUARRY SCALPING GRADED FROM 75mm DOWN.
12. A CONCRETE SURROUND IS NOT NORMALLY REQUIRED TO MANHOLES UNLESS INSTALLED IN AREAS OF UNSTABLE GROUND. UNDER CONDITIONS OF FLOATATION OR WHERE SUBJECTED TO EXCEPTIONAL OR ECCENTRIC LOADS, IN WHICH CASE A 150mm SURROUND OF AT LEAST 20N/mm2 CONCRETE SHOULD BE PROVIDED. ANY JOINTS SHOULD BE STAGGERED WITH THE PRECAST CONCRETE JOINTS.
13. DOUBLE STEPS SHALL BE PLASTIC ENCAPSULATED CARBON TO BS EN 1247–2 MANHOLE STEPS. STEP IRONS AT 300ctrs. HORIZONTALLY & VERTICALLY MAY BE USED AS AN ALTERNATIVE TO DOUBLE STEPS.
14. ALL WORK TO BE IN ACCORDANCE WITH "SEWERS FOR ADOPTION SIXTH EDITION" AND UNITED UTILITIES WATER PLC's STANDARD CONSTRUCTION DETAILS

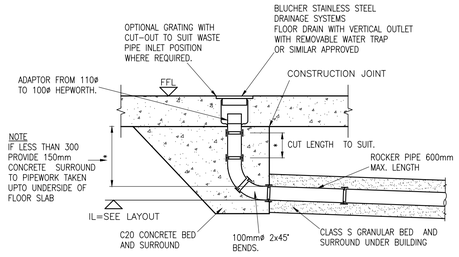

INTERNAL FLOOR DRAIN

(1:20)

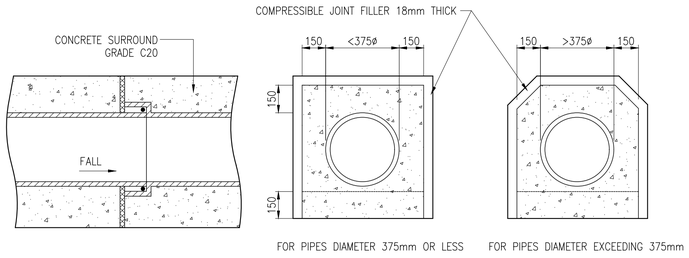

DETAILS OF FLEXIBLE JOINT FOR PIPES WITH CONCRETE SURROUND (150mm THICK) PROVIDED AT EACH PIPE JOINT

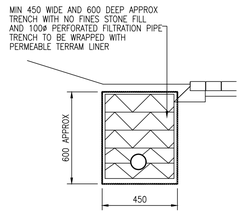

FILTER DRAIN DETAIL

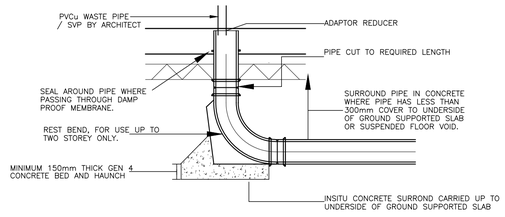

TYPICAL DRAIN CONNECTION

(FOR BUILDINGS 3 STOREYS HIGH OR LESS)

REV	DATE	DESCRIPTION	BY	CHK	APP
P01	01.04.2020	PRELIMINARY - FOR DISCHARGE OF PLANNING CONDITIONS ONLY	JRS	JMM	JMM

DRAWING STATUS: **PRELIMINARY**

CLIENT: THE CHRISTIE NHS FOUNDATION TRUST

ARCHITECT: IBI GROUP

PROJECT: THE CHRISTIE
P22 TIERED CAR PARK

TITLE: BELOW GROUND DRAINAGE
TYPICAL DRAINAGE DETAILS - SHEET 2 OF 2

STATUS:	PROJECT No.	PROJECT	ORIGINATOR	VOL/SYS	LEVEL	TYPE	ROLE	DRAWING No.	REV:
S2	218-310	CCP-	AJP -	ZZ -	00 -	DR -	C -	3012	P01

SCALE @ A1:	DESIGNED:	DRAWN:	CHECKED:	APPROVED:	DATE:
N.T.S	JRS	JRS	JMM	JMM	APR 2020

alan johnston partnership LLP
CONSULTING STRUCTURAL & CIVIL ENGINEERS
1 Dale Street, Liverpool L2 2ET
Tel: 0151 227 1462
Fax: 0151 225 1187
E-Mail: Mail@ajpstructeng.com