Plan scale 1:200 @ A1

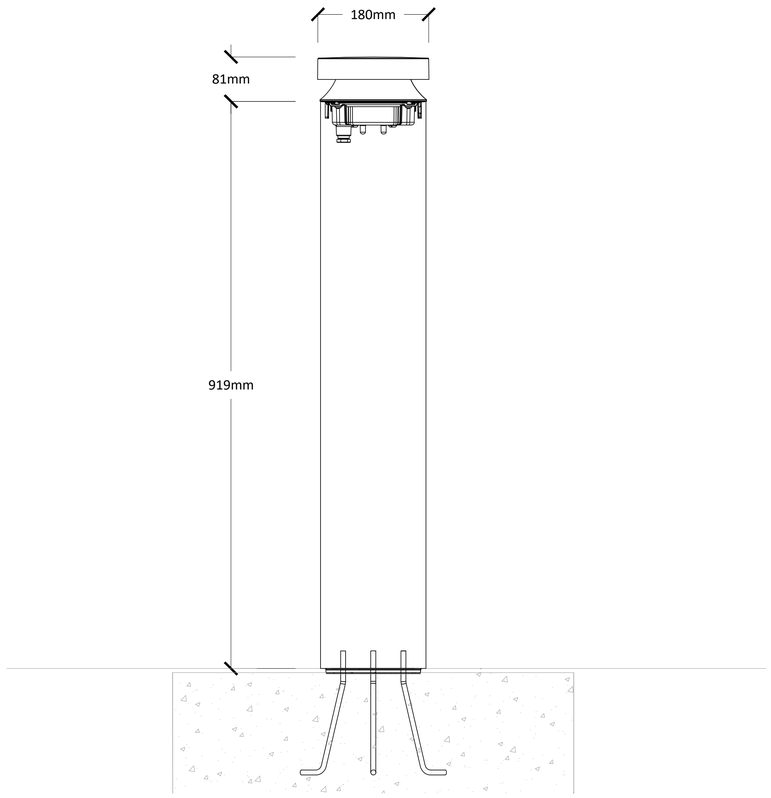

Type B1 Surface Mounted Bollard,
scale 1:5@ A1

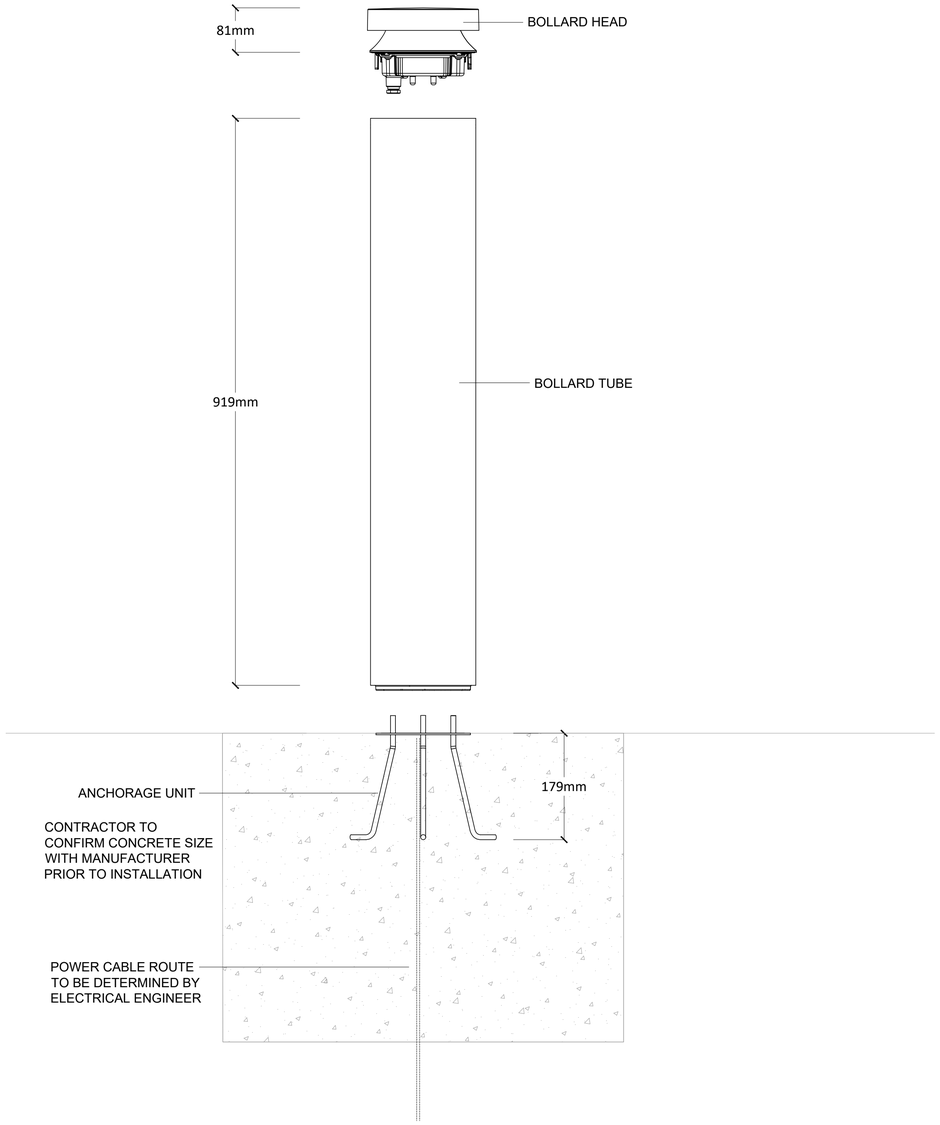

Detail - Scale 1:5@ A1

Note

All final dimensions, fixings and details should be taken from architects co-ordinated drawings or where applicable fabricators / manufacturers drawings.

Luminiare Key

ADDITIONAL NOTES.

FOR FULL DETAILED SPECIFICATION REFER TO Studio FRACTAL DOCUMENT

Luminaire references refer to luminaire type and control channel (not electrical circuits)

D10 / 01

LUMINAIRE REF — CONTROL CHANNEL

Rev	Description	Date
01	FOR PLANNING	19-02-21

All dimensions are in millimetres unless otherwise stated. This drawing is not to be scaled. Use figured dimensions only.

Drawing Status
FOR PLANNING

STUDIOFRACTAL
Suite 101, Castle Court, London Road
Reigate, RH2 9RJ
Tel. +44 (0)1737 735300, Email: info@studiofractal.co.uk

Project
MAYFIELD PARK

Drawing Title
B1 BOLLARD
LIGHTING DETAILS

© All rights reserved. No part of this design may be reproduced without the prior agreement of StudioFractal Ltd.

Drawn By	Drawn Date	Checked By	Checked Date
EF	19/02/21	SK	19/02/21

Approved By	Approved Date	Scale
CS	19/02/21	Varies

Drawing No.	Rev
4292_05_017	01