A0

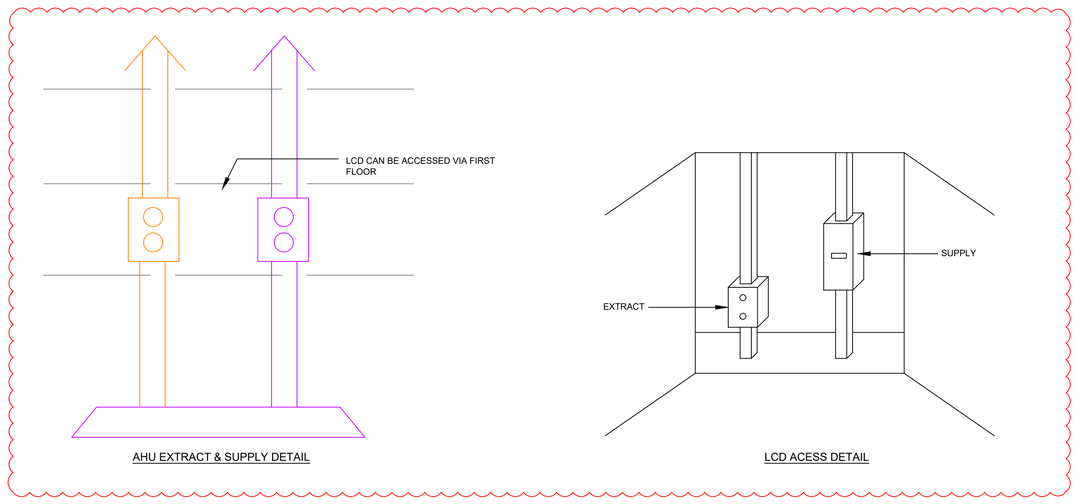

GENERAL NOTES

1) THIS DRAWING SHALL BE READ IN CONJUNCTION WITH THE MECHANICAL ENGINEERING GENERAL AND PARTICULAR SPECIFICATIONS.

GENERAL NOTES FOR HEATING SERVICES

1) ALL PIPEWORK SHALL BE PROVIDED WITH AUTOMATIC AIR VENTS (AAV'S) AT HIGH POINTS AND DRAIN COCKS AT LOW POINTS.
2) ALL RADIATOR CONNECTIONS BBOE UNLESS SPECIFIED OTHERWISE.
3) ALL HEATING F&R DROPPERS 15mm UNLESS INDICATED OTHERWISE ON DRAWING.

GENERAL NOTES FOR VENTILATION

1) ALL DUCTWORK ROUTES AND POSITIONS OF EQUIPMENT ARE APPROXIMATE. EXACT ROUTES AND POSITIONS ARE TO BE AGREED OR VERIFIED ON SITE.
2) ALL EQUIPMENT SHALL BE LOCATED/POSITIONED TO SPATIAL REQUIREMENT FOR MAINTENANCE AS RECOMMENDED BY THE MANUFACTURER.
3) ALL EQUIPMENT SHALL BE INSTALLED IN ACCORDANCE WITH THE MANUFACTURERS RECOMMENDATIONS.
4) ALL EQUIPMENT SUPPORTED FROM WALLS/CEILINGS/FLOORS TO BE FIXED BY A METHOD TO BE APPROVED BY THE CONSULTING ENGINEER PRIOR TO COMMENCEMENT OF WORKS.
5) FOR DETAILS OF ALL EQUIPMENT REFER TO THE SPECIFICATION.
6) NEW DUCTWORK TO BE INSULATED AS DETAILED WITHIN THE SPECIFICATION.
7) ALL DUCTWORK TO BE INSTALLED FULLY IN ACCORDANCE WITH HVCA DW144.
8) FLEXIBLE DUCTWORK SHALL BE NO GREATER THAN 500mm.

GENERAL NOTES FOR DOMESTIC SERVICES

1) ALL SANITARYWARE OUTLETS PLANT AND EQUIPMENT TO BE PROVIDED WITH ISOLATION VALVES TO LOCAL ISOLATORS.

MECHANICAL SERVICES LEGEND

SYMBOL	DESCRIPTION
CWT BST	COLD WATER TANK AND BOOSTER SET
	PIPEWORK AT LOW LEVEL
	PIPEWORK AT HIGH LEVEL WITHIN CEILING VOID
	PIPEWORK RISE OR FALL
	ISOLATION VALVE
	BALANCING VALVE
	DOUBLE CHECK VALVE
	HOT/COLD WATER OUTLET
W	COLD WATER METER
	MIXER SHOWER
	IN LINE EXTRACT FAN
HRU	HEAT RECOVERY UNIT
	SUPPLY AIR GRILLE
	EXTRACT AIR GRILLE
	SUPPLY LOUVRE
	EXTRACT LOUVRE
	DUCTWORK
	300 x 300 DOOR TRANSFER GRILLE C/W INTRMESCENTCORE
VCD	VOLUME CONTROL DAMPER
	CROSS TALK ATTENUATOR
	WALL MOUNTED AIR CONDITIONING EXTERNAL CONDESOR
	FLOOR STANDING AIR CONDITIONING EXTERNAL CONDENSOR
	CEILING MOUNTED AIR CONDITIONING UNIT
AC	AIR CONDITIONING CONTROLLER
HRU	HEAT RECOVERY UNIT CONTROLLER
	WALL MOUNTED AIR CONDITIONING UNIT
	BACKDRAUGHT SHUTTER
	RECTANGULAR DUCTWORK RISE/FALL
RTA	RISE TO ABOVE
DTLL	DROP TO LOW LEVEL
HL	HIGH LEVEL
LL	LOW LEVEL
RFB	RISE FROM BELOW

DRAWING NOTES

1	NATURALLY VENTILATED VIA OPENING DOORS/WINDOWS

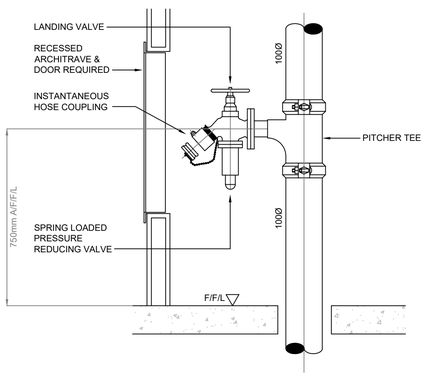

DRY RISER PRESSURE REDUCING
LANDING VALVE DETAIL
DETAIL F

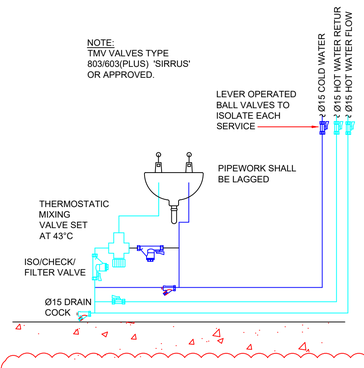

THERMOSTATIC MIXING VALVE ARRANGEMENT FOR
WASH HAND BASIN

NOTE - TMV's REQUIRED TO ASSISTED WHB's,
COMMERCIAL KITCHEN WHB, ASSISTED BATH AND
WHB, STAFF REST AND MULTIPURPOSE SINK

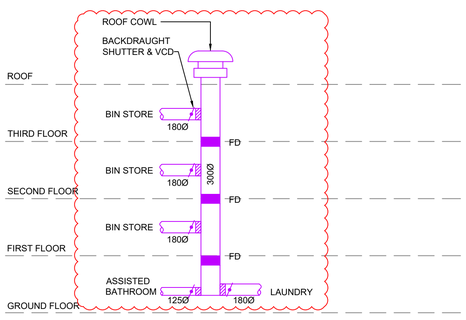

DETAIL 'B'
CLEANER'S/BIN STORE EXTRACT

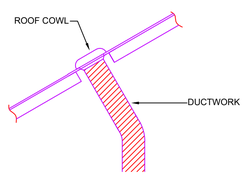

DETAIL 'C'
TYPICAL ROOF COWL
DUCTED ROOF INSTALLATION

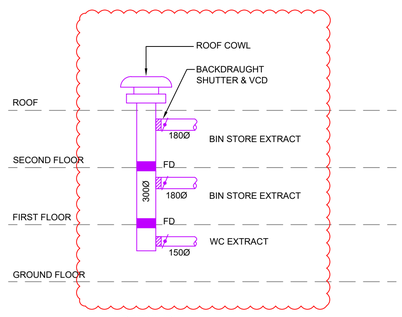

DETAIL 'D'
WC/BIN STORE EXTRACT

Rev.	Description	Revised By	Date
I8	EXTARCT & SUPPLY RISERS INDICATED.	D.W.	Sep. '20
I7	UPDATED INLINE WITH SEALY'S COMMENTS.	J.J.	Feb. '20
I6	DRY RISER POSITIONS INDICATED.	D.L.	Dec. '19
I5	REVISED FOLLOWING FURTHER COMMENTS	D.L.	Nov. '19
I4	REVISED FOLLOWING DTM 15/10/19	D.L.	Oct. '19
I3	REVISED IN LINE WITH ARCHITECTS COMMENTS	P.T.	Oct. '19
I2	REVISED FOLLOWING DTM 10/9/19.	P.T.	Sep. '19
I1	INFORMATION ISSUE.	P.T.	Aug. '19

STATUS
INFORMATION

ecs CONSULTANTS
Building Services Consulting Engineers
148 Stockport Road
Cheadle, Cheshire. SK8 2DP
Tel. 0161 283 2882 Fax 0161 282 8825
Web Site: www.ecs-ecs.co.uk Email: sales@ecs-ecs.co.uk

JOB NO.	DRAWING NO.	COMPUTER FILE	REVISION
22/057	22/057/M/02	22_057_M_02	I8
DATE	SCALE	DRAWN	CHECKED
Aug. 2019	1:100 @ A0	P.H.	P.T.

JOB TITLE
Bellamy Court

DRAWING TITLE
First Floor
Domestic Services &
Ventilation Layout

CAD original - not to be modified by hand