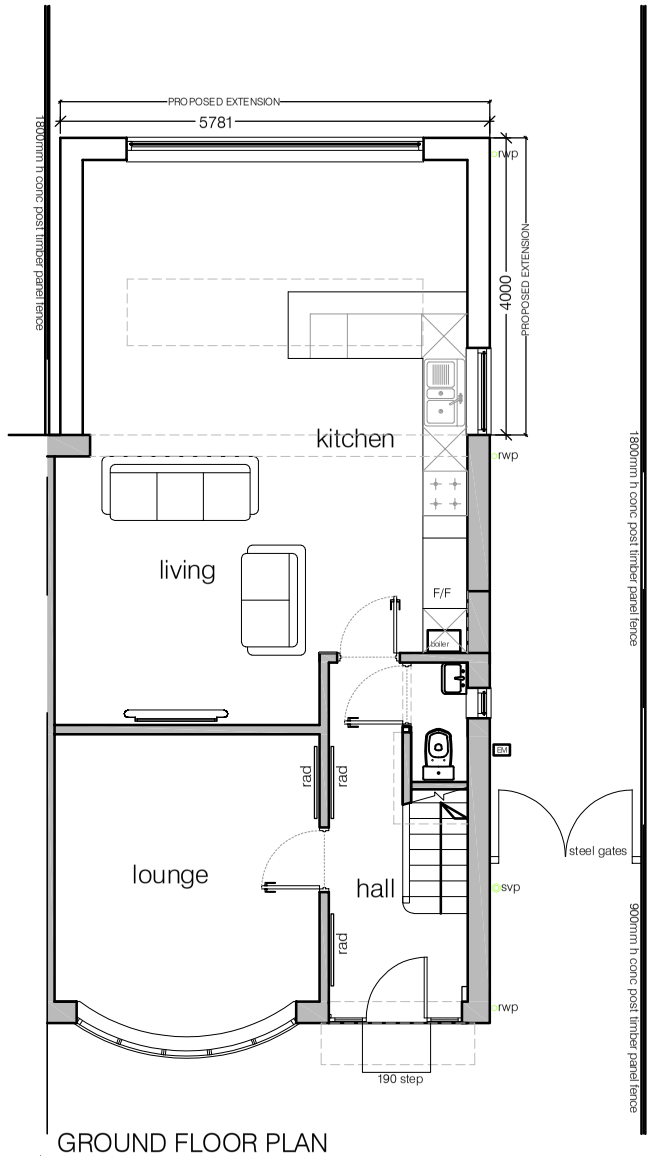


GROUND FLOOR PLAN

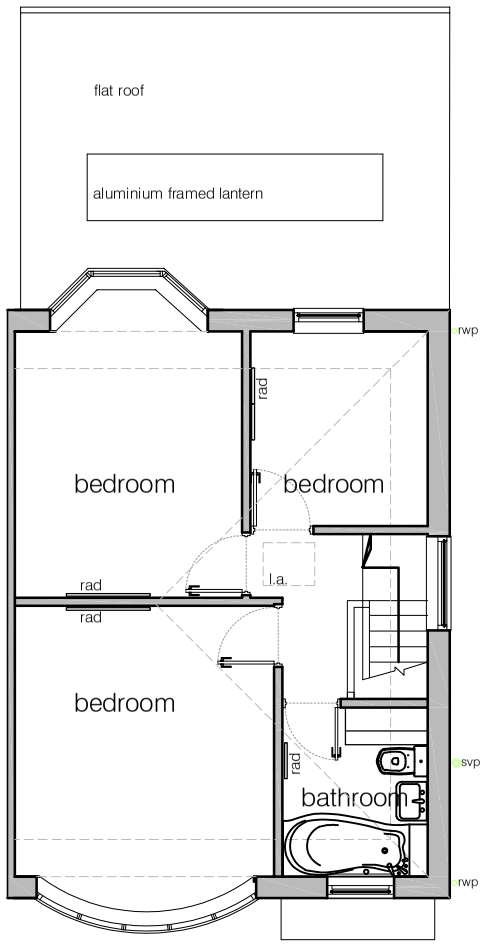


FIRST FLOOR PLAN




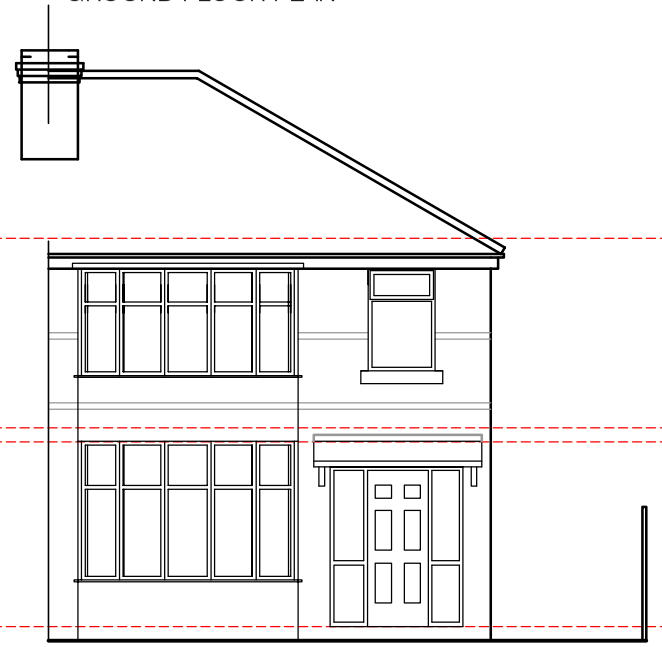

FRONT ELEVATION

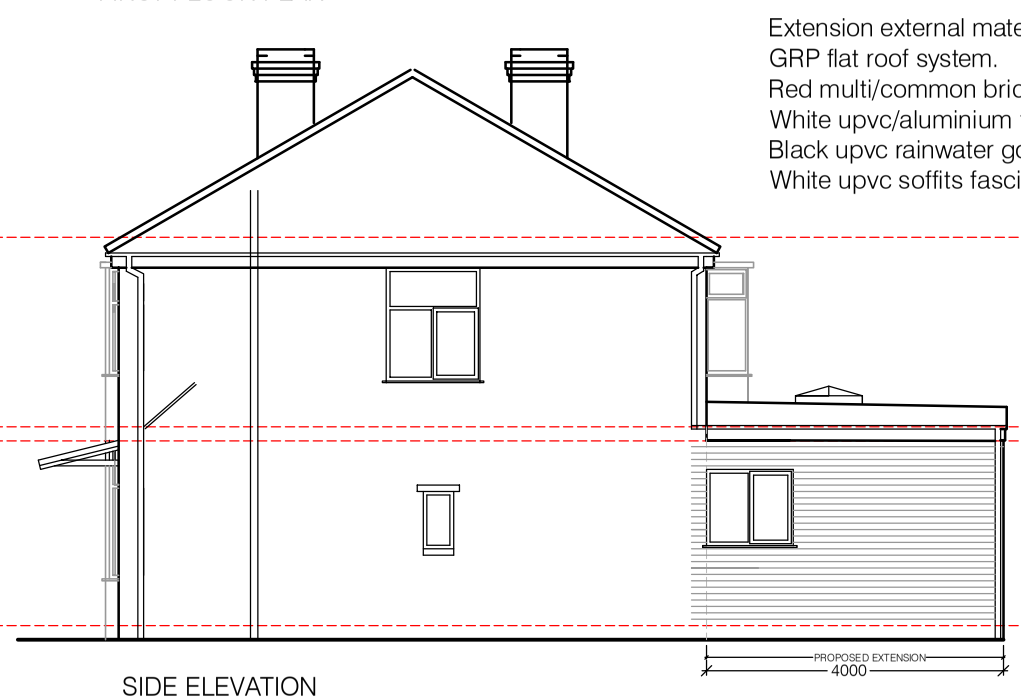


SIDE ELEVATION

Extension external materials:
GRP flat roof system.
Red multi/common brick to external walls
White upvc/aluminium framed d/g windows
Black upvc rainwater goods
White upvc soffits fascias and bargeboards




REAR ELEVATION

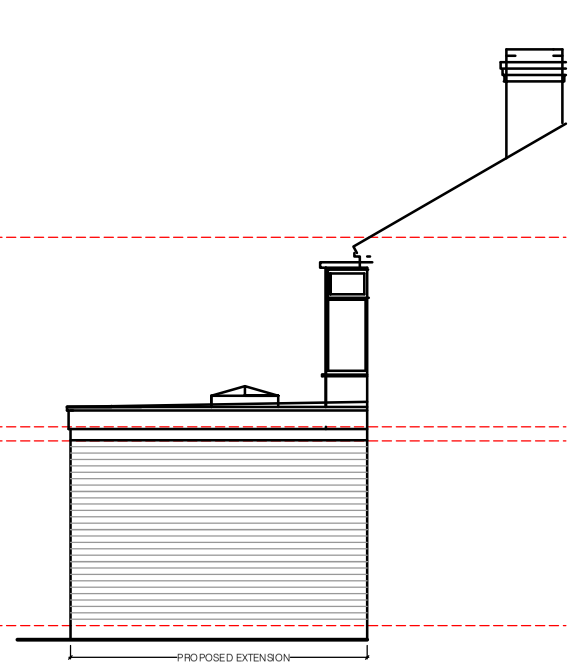


SIDE ELEVATION

Simon R Miles
Chartered Architect
Didsbury
Manchester
T: 07778 137830
E: srmilesarchitect@gmail.com

Do not scale. Contractors must check all dimensions on site before preparing production drawings or commencing any work. This drawing and its design is the copyright of S.R.Miles Ltd and may not be reproduced in any form whatsoever without their prior express written consent.

Revision Date Revision note

Notes

0 1 2 3 4 5

**Project :**
11 Delaine Road Withington

**Title :**
Floor plans and elevations as proposed

**Drawing number :** **Issue :**
21 257 PL200

**Client :**
Mr S Muszynski

**Scale :**
100@A3

**Date :**
09.03.2021

**CAD Ref :**
21 257

**Drawn by :**
SRM

SRM
Simon R Miles BA Hons Dip Arch RIBA
Chartered Architect