Unit 9 Hill Lane Close, Hill Lane Industrial Estate, Markfield, Leicestershire, LE67 9PY

Technical Submission for Proposed GDK Development Proposed GDK 14 Oxford Road, Manchester, M1 5QA

Prepared by McVeigh Technical Solutions Ltd

Date 06-01-21

Tel: 01530 245777
Fax: 01530 245888
Email: info:@mcveigh-aircon.co.uk
Website: www.mcveigh-aircon.co.uk
Company Registered in England No. 3706381

Technical Submission for Kitchen Extract Ventilation at Proposed GDK Proposed GDK 14 Oxford Road, Manchester, M1 5QA

Date - 06-01-21

The System

The system is based on Purified Air equipment or equal. The first stage of control should be the Electrostatic Precipitator ESP6000 unit.

The ESP's have been specifically designed for kitchen extract and not modified from industrial use, they have integral sumps to collect the oil, grease and smoke particles filtered out of the exhaust; this not only simplifies servicing but eradicates potentially dangerous spillage from the bottom of the units and greatly cuts down on flammable build-ups within the duct run.

The ionisation voltage has been designed to run at a negative potential which enhances the ionisation of particles and also produces more Ozone which is helpful in reducing odours in kitchen applications.

The ESP units fit in-line with the kitchen ducting and can be configured modularly to cope with all extract volume requirements

The Electrostatic Precipitator is a very efficient means for separating the particulate phase; operating efficiency when clean can be as high as 98% at particle sizes down to 0.01 micron.

The Electrostatic Precipitator does not present a high-pressure loss (175PA approx. dependent on air flow).
This gives a specific advantage in that most standard Kitchen extractor fans will have the capability of overcoming this small differential.

This is particularly advantageous when it is considered that if the pressure loss were high larger noisier fans would probably be necessary resulting in potential noise pollution.

Once Oil, Grease and Smoke are removed by the ESP the Odour will be absorbed by the Site-Safe Carbons, achieving a minimum 0.2 residence/dwell time.

UV treatment

The system is based on Purified Air equipment or equal. The second stage of control should be the UV filter range 2 x UV-O 1000

The system is based on the synergy that occurs when ozone and ultraviolet are combined. The system comprises a quantity of lamps a percentage of which are designed to produce UV light at 185nm, converting ozone from the oxygen present in the air. The remaining lamps combine to produce UV light at 254nm which destroys the ozone and any mercaptans remaining in the proximity of the lamps. A photo catalytic liner is used to enhance the production of hydroxyl radicals, which are both very short- lived and extremely oxidising. A UV system cannot destroy smoke or other particulate although it has some affect in altering the make-up of cooking grease to a better managed compound.

How does Ultraviolet Work?

Strong sunlight permanently de-activates bacteria, spores, moulds and viruses. Over a century ago, scientists identified the part of the electromagnetic spectrum responsible for this well-known effect; wavelengths between 200nm and 300nmm, called UV-C. The mechanism of kill is well documented and unlike chemical disinfectants the organism is unable to develop any immune mechanisms. The mechanism of kill involves the absorption of photons of UV energy by the DNA, which fuses the DNA and prevents replication.
DNA (Deoxyribonucleic acid) consists of a linear chain of nitrogen bases known as purines (adenine and guanine) and pyrimidine's (thymine and cytosine).
These components are linked along the chain by sugar-phosphate components. The DNA of most forms of life is double stranded and complementary; the adenine in one strand is always opposite thymine in the other, and linked by a hydrogen bond, and guanine is always paired with cytosine by a hydrogen bond. The purine and pyrimidine combinations are called base pairs.
When UV light of a germicidal wavelength is absorbed by the pyrimidine bases (usually thymine) the hydrogen bond is ruptured. The dimer that is formed links the two bases together, and this disruption in the DNA chain means that when the cell undergoes mitosis (cell division) the DNA is not able to replicate.

How is UV Light Generated?

Ultraviolet light is most typically generated from a low- pressure lamp as described below; Low Pressure lamps are the most common lamp type and are the oldest source of ultraviolet light. They consist of a quartz envelope that separates two tungsten filaments. The lamp is evacuated and a level of mercury is introduced into the quartz envelope. The spectral output of this lamp type is monochromatic, a single line output at 253.7nm or 185nm. A fluorescent lamp is a low-pressure lamp

Site Safe Carbon Filters

Site safe carbon units measure 594x196x597mm, three combining to 594x594x597mm, directly replacing the original carbon blocks whilst providing exactly the same filter performance as an existing full-size cell. The filters will be provided to an assembly providing a dwell time of 0.2-0.3s. The filters will be complete with grease and pre-filter.

Their advantage is that they only weigh 18kg each. This takes the strain out of fitting and servicing, allowing only one engineer to complete the task where two had been previously required.

The Site-Safe carbon filters use panels of activated carbon to remove the malodourous gases within the commercial kitchen extract duct through the process of chemical adsorption.

UV-O Range

Unlike other UV-C systems, our UV-O units are located outside of the kitchen extract duct and are connected via a spigot and spiral ducting.

KEY FEATURES

- Easy to install
- Can be retro-fitted into existing duct
- Virtually no pressure loss
- No monthly maintenance needed

Our UV-O range includes:-

- **UV-O 500 which handles up to 1 m³/sec of air flow**
- **UV-C 1000 which handles up to 2 m³/sec of air flow**

The UV-O 500 has been designed for smaller capacity commercial kitchens.

The UV-O range uses UV-C technology to produce ozone and hydroxyl free radicals to oxidise cooking odours through a process of ozonolysis.

Unlike other UV-C systems, our UV-O units are located outside of the kitchen extract duct and are connected via a spigot and small diameter ducting.

Although it is widely accepted that the best way to apply UV-C light is directly in-line with the air stream itself, performance will be impacted as the lamps get dirty.

With our UV-O units the air flow does not come from the exhaust duct but from the ambient air around the unit, which is filtered on entry. This means that it is able to provide a uniform supply of ozone and hydroxyl free radicals into the extract system with an extremely low pressure loss.

For optimum performance we would recommend between 2 & 6 seconds of dwell time to allow the ozone to work effectively upon the malodorous gasses within the duct.

UV-O 500 Unit

UV-O 1000 Unit

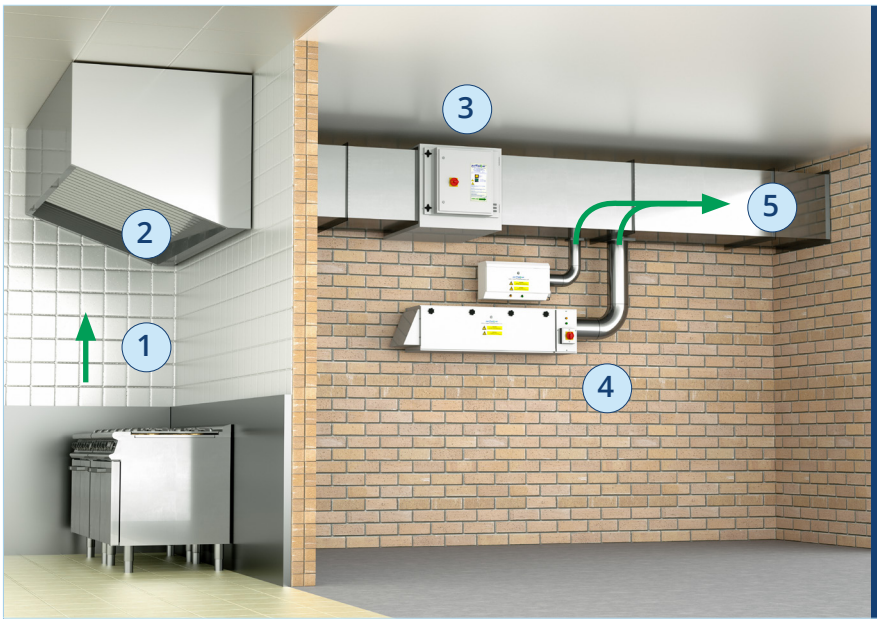

1. Cooking particulates and odours
2. Canopy Grease Filter
3. ESP - Particulate Control Unit
4. UV-O 500 (above)
   UV-O 1000 (below)
   Odour Control Units
5. Ozone joins airflow

Technical Specification

	UV-O 500	UV-O 1000
Electrical Supply	220/240V 50Hz	220/240V 50Hz
Power Consumption	120 Watts	700 Watts
Max Air Volume	up to 1m³/sec	up to 2m³/sec
Dimensions	W 605mm H 300mm D 200mm	W 1568mm H 350mm D 363mm
Weight	10.5Kg	50Kg

This unit's tried and tested UV-C technology allows for the siting of commercial kitchens in locations such as residential areas and shopping centres, where previously planning permission may not have been granted. After extensive research and development Purified Air are able to devise the best combination of lamps to provide the most effective odour control.

Safety

Ultra-Violet band C light is the most powerful of the three bands, it is a very strong oxidant and as such exposure to UV-C light is dangerous. To ensure safety the UV-C lamps are secured behind locked panels and the system has been engineered to shut down automatically when these panels are unlocked. However, since the lamps typically have a minimum life of twelve months and with the system able to operate at optimum efficiency even if one lamp fails it is unlikely that, apart from routine servicing by experienced engineers, that the system will ever need to be opened.

purified air® since 1984

Purified Air Limited, Lyon House, Lyon Rd, Romford, Essex RM1 2BG England
T: 01708 755 414 | F: 01708 721 488
enq@purifiedair.com | www.purifiedair.com

Our ESP Range

ESP 6000

- ESP 1500E which can handle up to 0.7m³/sec of air flow
- ESP 3000E which can handle up to 1.4m³/sec of air flow
- ESP 4500E which can handle up to 2.1m³/sec of air flow
- ESP 6000E which can handle up to 2.8m³/sec ofair flow

Our ESP's have been specifically designed for kitchen extract systems; they have integral sumps to collect the oil, grease and smoke particles filtered out of the exhaust. This not only simplifies servicing but eradicates potentially dangerous spillage from the bottom of the units and greatly cuts down on build-ups of grease within the ducting.

The ionisation voltage has been designed to run at a negative potential which enhances the ionisation of particles and also produces more ozone which is helpful in reducing cooking odours.

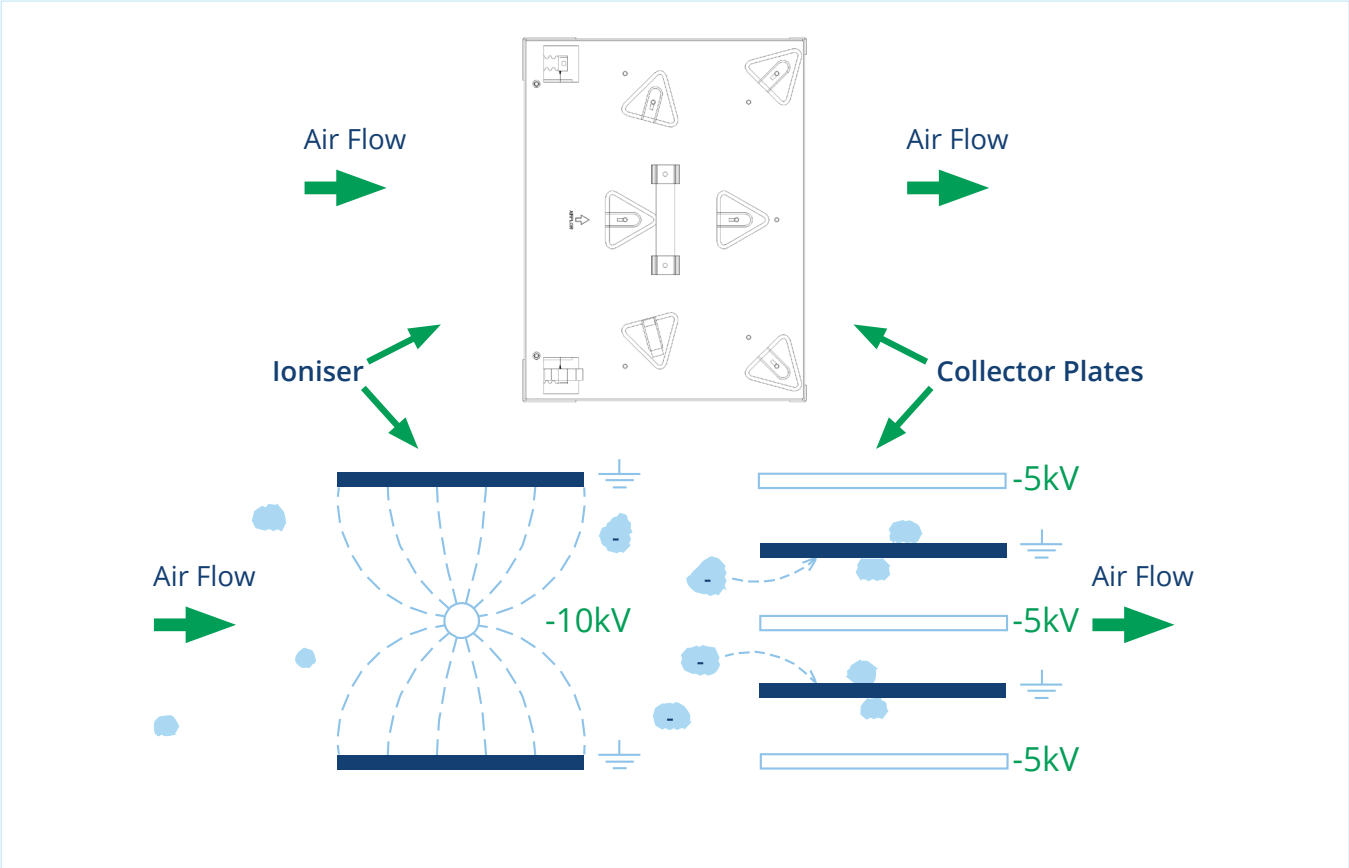

The above diagram shows, in a basic visual, how an electrostatic precipitator works. As air passes into the combined ioniser / collector cell, the particulates in the air stream are polarised to a negative potential. As they continue through the ioniser and between the collector cell plates, the polarised particulates are repelled away from the negatively charged plates and attracted to the earthed plates where they stick and so are filtered out of the air flow.

Our ESP units fit in-line with the kitchen ducting and can be configured modularly to cope with all extract volume requirements.

1. Cooking particulates and odours
2. Canopy Grease Filter
3. ESP - Particulate Control Unit
4. Airflow

KEY FEATURES

- Eliminates up to 98% of oil, grease and smoke particles
- Filters particles down to sub-micron levels
- Produces Ozone to help reduce malodours
- Designed with an integral sump
- Modular in design
- Specifically designed for commercial kitchen application
- Energy efficient: - uses no more than 50W
- Greatly reduces grease build-up within the duct run

3 ESP Units Stacked in modular formation

4 ESP Units Stacked in modular formation with a double pass

Technical Specification

	ESP 1500E	ESP 3000E	ESP 4500E	ESP 6000E
Electrical Supply	220/240V 50Hz	220/240V 50Hz	220/240V 50Hz	220/240V 50Hz
Power Consumption	20 Watts	30 Watts	40 Watts	50 Watts
Max Air Volume	up to 0.7m³/sec	up to 1.4m³/sec	up to 2.1m³/sec	up to 2.8m³/sec
Dimensions W/H/D	450mm/630mm/ 640mm	900mm/630mm/ 640mm	1350mm/630mm/ 640mm	1800mm/630mm/ 640mm
Weight	55Kg	85Kg	118Kg	153Kg

purified air® since 1984

Purified Air Limited, Lyon House, Lyon Rd, Romford, Essex RM1 2BG England
T: 01708 755 414 | F: 01708 721 488
enq@purifiedair.com | www.purifiedair.com

Passive Filtration

At Purified Air we supply a range of passive filtration that can be used both in conjunction with our powered units or as standalone filters dependant on the situation.

The filters include:

1. **Carbon Filters**
2. **Absolute (HEPA) Filters**
3. **Bag Filters**
4. **Pleated Panels**

Carbon Filters

We manufacture Sitesafe carbon filters, these innovative carbon units measure 594x196x597mm, three combining to 594x594x597mm, directly replacing our original carbon blocks whilst providing exactly the same filter performance as an existing full size cell.

Their advantage is that they only weigh 18kg each against the 68kg of our original blocks. This takes the strain out of fitting and servicing, allowing only one engineer to complete the task where two had been previously required.

Our Sitesafe carbon filters use panels of activated carbon to remove the malodourous gases within the commercial kitchen extract duct through the process of chemical adsorption. By installing our ESP units before our Sitesafe filters, the carbon life span is greatly increased, allowing it to nullify malodours at optimum efficiency for much longer.

Will require two people plus lifting equipment to carry and install.

Safe for one person to carry.

No special lifting equipment required.

Carbon PA242424

Size	594 x 594 x 597
Gross Weight	68.2Kg
Carbon Weight	50Kg
Rated Airflow	3600m³/hr*
Pressure Drop	120Pa

Sitesafe PA240824

Size	594 x 196 x 597
Gross Weight	17.95Kg
Carbon Weight	16.6Kg
Rated Airflow	1200m³/hr*
Pressure Drop	120Pa

Sitesafe 3 x PA240824

Size	594 x 594 x 597
Gross Weight	53.85Kg
Carbon Weight	50Kg
Rated Airflow	3600m³/hr*
Pressure Drop	120Pa

*Rated Airflow based on a dwell time of 0.1 seconds. Available in all sizes to retrofit carbon cells

Carbon Filter Cell Part Number	Nominal Size (inches)	Height (mm)	Width (mm)	Depth (mm)	Weight of Encased Carbon (Kg)	Weight of Entire Cell (Kg)	Capacity @ 0.1 Second Dwell Time M3/h
PA-240824-7C "Site Safe"	24 x 08 x 24	594	196	597	17	18	1266
PA-242412-7C	24 x 24 x 12	594	594	297	25	36	1900
PA-242424-7C	24 x 24 x 24	594	594	597	50	61	3800

Please find our most popular sizes above, we do supply many different sizes and grades of carbon filters so please contact us with your requirements.

Click on a tab to go directly to that section

Britstream...

Self selection hoods by Britannia

Beautifully efficient kitchen ventilation:

Consistently high quality manufacture - to ISO 9001:2008 | Super efficient grease removal
Environmental design considerations | Custom made quality - at production-run prices

Britannia
kitchen ventilation

Forward

About Us
Range
Products
One
CaptureStream
Econex
Dish Wash
Accesories
Nomeclature
Ordering

About Britannia...

Britannia has been servicing the commercial kitchen ventilation market since 1995. Our portfolio contains a long, long list of fully satisfied customers & end-users; a legacy which provides us with a reputation that is second to none. From the largest to the smallest of projects, no effort is spared in finding the right solution to your kitchen ventilation problem.

Since its inception, Britannia has built its reputation upon a team of the industry's most experienced people, with a combined knowledge far surpassing that of our competitors. It is this intimate understanding of the product, the industry & our focus on customer service, which has seen us grow into the UK's market leading supplier of Commercial & Institutional Kitchen Hoods.

Our ethos is simple: We provide a range of products of the highest quality, at very affordable prices, whilst being mindful of the impact their manufacture & use has upon the environment. These key drivers are then solidly backed up by a level of service from our sales & technical teams, which ensures the correct selection & sizing for any given situation.

To advance this service yet further, as well as to facilitate greater control & understanding for our customers, we have developed the range of Britstream Hoods together with this product catalogue to help your selection process. With Britstream, we have put even more control in your hands, without losing any of the back-up & service you have always enjoyed from us and at even more competitive prices!

All Britannia products & services are quality controlled to ISO 9001:2008 under BRE Global surveillance.

All Britannia hoods are manufactured to comply with or exceed the requirements of DW172 & BS 6173.

Britannia is a full member of the Building & Engineering Services Association (formerly the Heating & Ventilation Contractor's Association).

Britannia is B M Trada - compliance certified.

Britannia is CHAS (Contractor Health & Safety Assessment Scheme) accredited.

Britannia is registered with Constructionline.

Britannia is a member of the Coventry Chamber of Commerce.

Britannia is a member of the Confederation of Construction Specialists.

Britannia has the "CodeMark" certificate of conformity confirming compliance with the Building Code of Australia (Issued by SAI Global)

2 Year Warranty on all Britstream products

For more information about Britannia, the product range and full literature with case histories, please visit our website:
www.kitchen-ventilation.co.uk

The Britstream range

The Britstream range of hoods has been developed after years of "in the field" research and development of kitchen hoods. Apart from this real-world in-put, we have extensively tested & retested products at our own facility in Leamington Spa as well as sponsoring many external test procedures on various components. The result of all this work is a hood system based around a group of modularised components which can be configured in multiple ways to create, what to all intents and purposes is a bespoke product. All parts have been designed to achieve a predetermined performance but are specifically not over-engineered. The combination of these properties provides a consistently high quality product, with great flexibility of application and at extremely competitive prices.

- Aesthetics are a priority during design, so all Britstream products look better, cleaner, brighter & proportionally correct for the environment.
- Functional efficiency is paramount and our product range incorporates innovative concepts which help reduce onward running costs in a myriad of ways.
- The range has been carefully designed to provide integral rigidity and to be self supporting - even when disassembled for transportation, so reducing the risks of damage in-transit.
- Only the finest materials, with consistent finish are used in the manufacture process. These are selected & utilised to reflect our concerns for the environment.
- Component sizing has been carefully considered to minimise risk to operatives when lifting, handling & installing.
- Reinforced fixing points have been strategically positioned to minimise site installation times.
- Panels are designed to be rigid so as to prevent drumming.
- Hidden fixings are utilised throughout.

Grease filtration

All Britstream hoods are equipped with Superstream grease filters as standard. Possibly the single-most important aspect of any kitchen ventilation hood, is the grease filtration; poor filtration drastically increases fire risk & maintenance requirements. For this reason, all Britstream canopies utilise our own highly developed ranges of either Superstream or Ultrastream grease filter panels. These have been tested in Germany to VDI 2052-1 and returned exceptional results at all particle sizes (up to 100% at 5.6 microns) but especially at smaller particle sizes (up to 70% at 3.5 microns) where most grease carry-over is caused and where most other filters fail.

Lighting

We have developed the "Britlux" range of light fittings which encompass everything that is important to modern kitchen installations; stylish, flush-fitting, low-energy, highfrequency, white-light, T5 lamps & ballasts. Each twin fitting has a hinged, sealed, toughened stippled-glass diffuser with drop down reflector and lamp array for ease of replacement, maintenance and for access above the canopy during installation. All lights are prewired to a junction box on the canopy and multiple lights are connected using prewired bi-pin moulded plugs to facilitate easy build-up after delivery. All lights are 240V 50Hz and lamp wattages are listed in the catalogue against the hood of your choice.

Supply-air Diffusers

Supply-air is typically delivered through the front, outward facing valance of the hood. We have developed a recessed, perforated diffuser panel arrangement with integral filtration to aid air distribution across the full area of the panel. The panels are then tastefully mounted within the front valance and trimmed above and below by a slim bevelled edge formed from the valance itself. Each panel is easily removed for maintenance and replacement and to gain access during the installation process.

Spot Cooling

For all supply-air applications as standard, fully adjustable spot cooling is incorporated for operator comfort. This directional air is delivered via smart, matt-black, ABS-moulded terminals in the lower front edge of the hood. Each terminal is easily removed for maintenance & replacement.

Materials

Hood assemblies are manufactured from type 304 stainless steel. All visible surfaces are fine grain satin polished to meet food hygiene standards. By special agreement, we can manufacture from other stainless steel sheet materials. Plenum ceilings are manufactured from zinc coated mild steel unless specified to the contrary.

Products

Click on a product below to go directly to that section:

One Pages 05-12

Traditional extract only & supply-air hoods; available in four configurations with standard width or extra wide (for use over ovens).

OE	Extract only - Standard depth
OER	Extract only - Reduced depth
OS2	Extract with front Supply & Spot cooling (2)
OS2R	Extract with front Supply & Spot cooling (2) - Reduced depth

Capturestream Pages 13-20

Airstream-induced capture hoods; available in four configurations with standard width or extra wide (for use over ovens).

CS1	Extract with induction Supply (1)
CS3	Extract with front Supply, Spot cooling & induction Supply (3)
CS1R	Extract with induction Supply (1) - Reduced depth
CS3R	Extract with front Supply, Spot cooling & induction Supply (3) - Reduced depth

Econex Pages 21-28

Super-efficient, low air-movement, ergonomic, environmentally friendly & available in four configurations with standard width, extra wide (for use over ovens) and super wide (for single sided island arrangements).

EF	Extract only - Front mounted
EFB	Extract only - Front & Back mounted
EFS2	Extract - Front mounted with front Supply & Spot cooling (2)
EFBS2	Extract - Front & Back mounted with front Supply & Spot cooling (2)

Dish Wash Page 29

Efficient capture & management of moisture loaded environments in a single, specialist configuration for all typical wash-up arrangements.

DWE	Dish Wash Extract

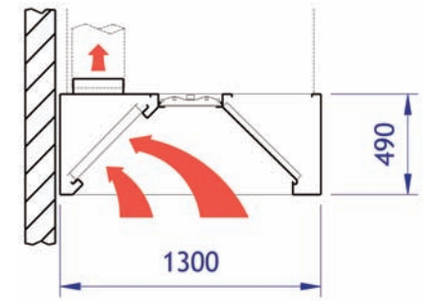

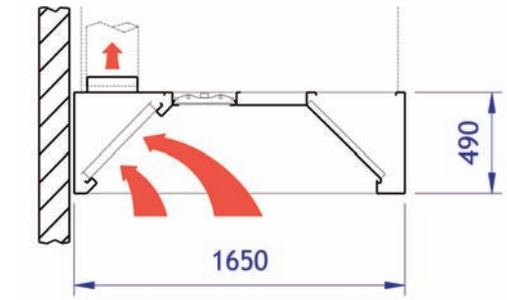

One OE

Extract only - standard depth

Length (mm)	Max. Extract Volume[2] (l/s)	Light Fittings	Extract Spigots[1] (Qty)	Extract Spigot Dimensions (mm)	Max. Supply Volume (l/s)	Supply Spigots[1] (Qty)	Supply Spigot Dimensions* (mm)	Weight (Kg)
1200	660	1 x 21W Twin Lamp	One	400 x 300	0	None	N/A	80
1375	660	1 x 21W Twin Lamp	One	400 x 300	0	None	N/A	90
1550	880	1 x 28W Twin Lamp	One	500 x 300	0	None	N/A	95
1725	880	1 x 28W Twin Lamp	One	500 x 300	0	None	N/A	105
1900	1100	1 x 35W Twin Lamp	One	600 x 300	0	None	N/A	110
2075	1100	1 x 35W Twin Lamp	One	600 x 300	0	None	N/A	120
2250	1320	1 x 35W Twin Lamp	One	800 x 300	0	None	N/A	125
2425	1320	1 x 35W Twin Lamp	One	800 x 300	0	None	N/A	135
2650	1540	1 x 21W & 1 x 28W Twin Lamp	Two	400 x 300	0	None	N/A	155
2825	1540	1 x 21W & 1 x 28W Twin Lamp	Two	400 x 300	0	None	N/A	165
3000	1760	2 x 28W Twin Lamp	Two	500 x 300	0	None	N/A	170
3175	1760	2 x 28W Twin Lamp	Two	500 x 300	0	None	N/A	180
3350	1980	1 x 28W & 1 x 35W Twin Lamp	Two	600 x 300	0	None	N/A	185
3525	1980	1 x 28W & 1 x 38W Twin Lamp	Two	600 x 300	0	None	N/A	195
3700	2200	2 x 35W Twin Lamp	Two	600 x 300	0	None	N/A	205
3875	2200	2 x 35W Twin Lamp	Two	600 x 300	0	None	N/A	215
4050	2420	2 x 35W Twin Lamp	Two	700 x 300	0	None	N/A	220
4225	2420	2 x 35W Twin Lamp	Two	700 x 300	0	None	N/A	230
4400	2640	2 x 35W Twin Lamp	Two	700 x 300	0	None	N/A	235
4575	2640	2 x 35W Twin Lamp	Two	700 x 300	0	None	N/A	245
4800	2860	2 x 28W & 1 x 35W Twin Lamp	Three	600 x 300	0	None	N/A	260
4975	2860	2 x 28W & 1 x 35W Twin Lamp	Three	600 x 300	0	None	N/A	280
5150	3080	1 x 24W & 2 x 35W Twin Lamp	Three	600 x 300	0	None	N/A	280
5325	3080	1 x 28W & 2 x 35W Twin Lamp	Three	600 x 300	0	None	N/A	300
5500	3300	3 x 35W Twin Lamp	Three	600 x 300	0	None	N/A	295
5675	3300	3 x 35W Twin Lamp	Three	600 x 300	0	None	N/A	315
5850	3520	3 x 35W Twin Lamp	Three	700 x 300	0	None	N/A	310
6025	3520	3 x 35W Twin Lamp	Three	700 x 300	0	None	N/A	330
6200	3740	3 x 35W Twin Lamp	Three	700 x 300	0	None	N/A	325
6375	3740	3 x 35W Twin Lamp	Three	700 x 300	0	None	N/A	345
6550	3960	3 x 35W Twin Lamp	Three	800 x 300	0	None	N/A	340
6725	3960	3 x 35W Twin Lamp	Three	800 x 300	0	None	N/A	360

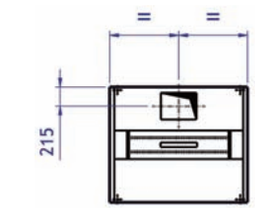

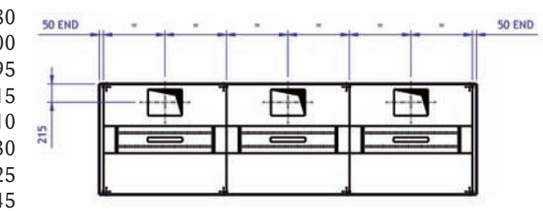

(1) Alternative dimensions / sizes are available upon request.
(2) Maximum Extract Volume base upon use of Superstream baffle type grease filter panels.

One OE

Wall and island hood configurations

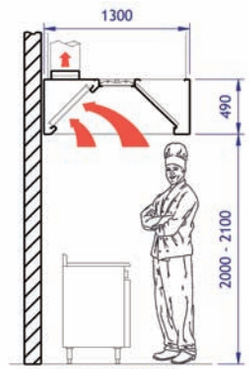

One/OE/1300SSW

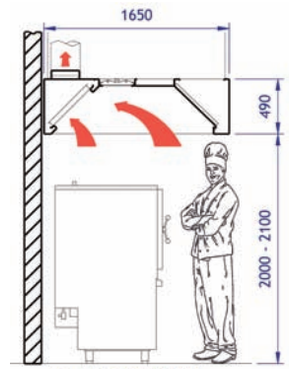

One/OE/1650SSW

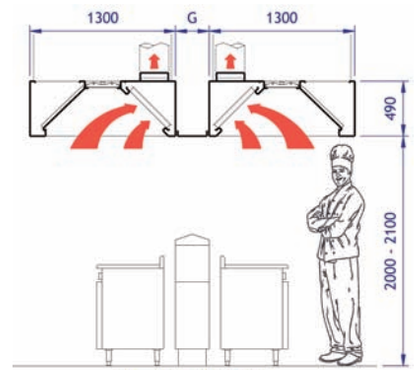

One/OE/DSI-X:G

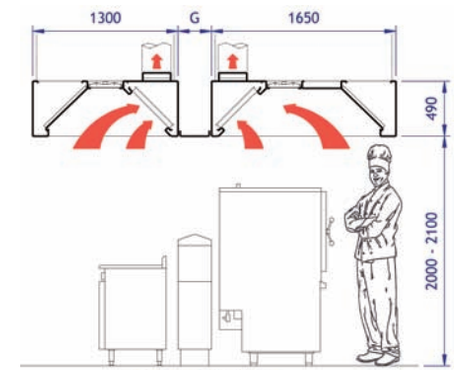

One/OE/DSI-Y:G

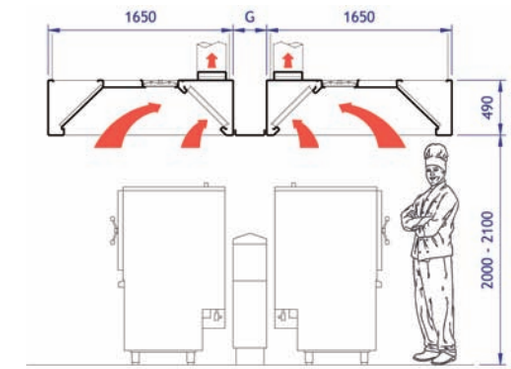

One/OE/DSI-Z:G

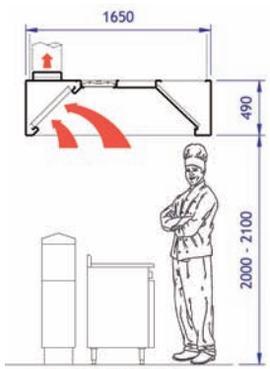

One/OE/1650SSI

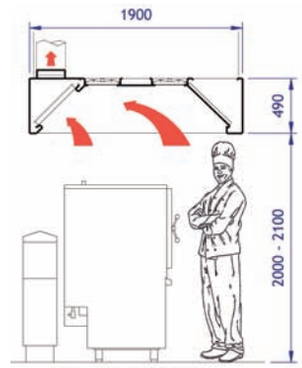

One/OE/1900SSI

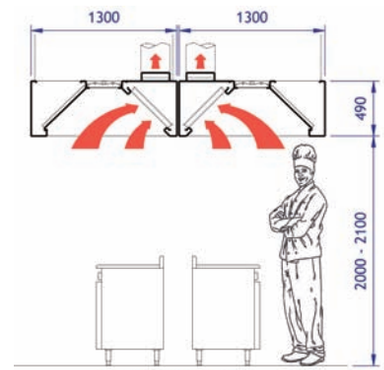

One/OE/DSI-X

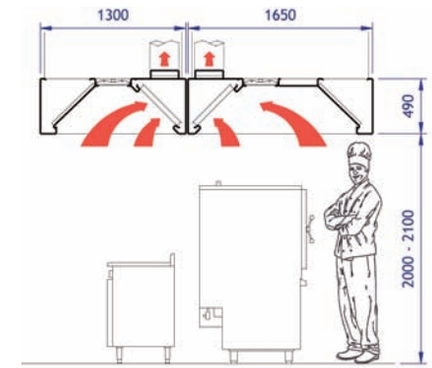

One/OE/DSI-Y

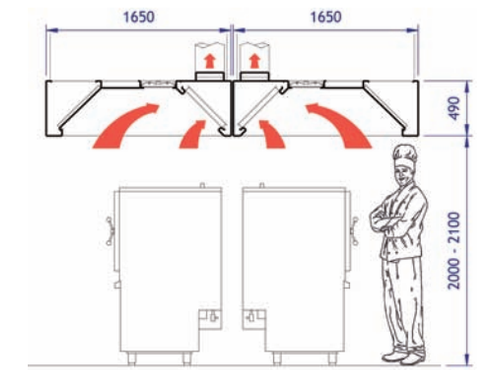

One/OE/DSI-Z

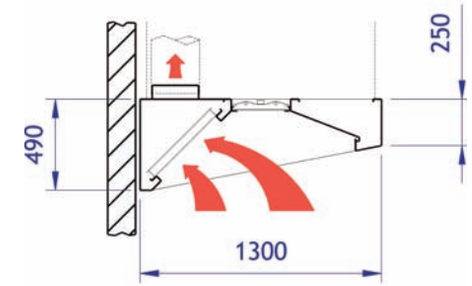

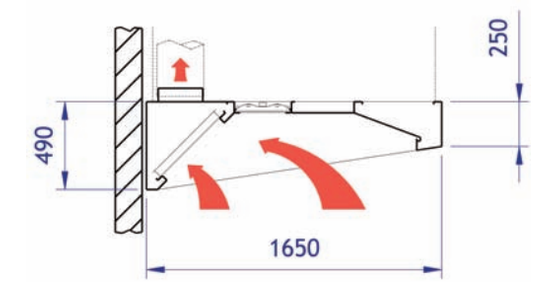

One OER

Extract only - reduced depth

Length (mm)	Max. Extract Volume[2] (l/s)	Light Fittings	Extract Spigots[1] (Qty)	Extract Spigot Dimensions (mm)	Max. Supply Volume (l/s)	Supply Spigots[1] (Qty)	Supply Spigot Dimensions* (mm)	Weight (Kg)
1200	660	1 x 21W Twin Lamp	One	400 x 300	0	None	N/A	80
1375	660	1 x 21W Twin Lamp	One	400 x 300	0	None	N/A	90
1550	880	1 x 28W Twin Lamp	One	500 x 300	0	None	N/A	95
1725	880	1 x 28W Twin Lamp	One	500 x 300	0	None	N/A	105
1900	1100	1 x 35W Twin Lamp	One	600 x 300	0	None	N/A	110
2075	1100	1 x 35W Twin Lamp	One	600 x 300	0	None	N/A	120
2250	1320	1 x 35W Twin Lamp	One	800 x 300	0	None	N/A	125
2425	1320	1 x 35W Twin Lamp	One	800 x 300	0	None	N/A	135
2650	1540	1 x 21W & 1 x 28W Twin Lamp	Two	400 x 300	0	None	N/A	155
2825	1540	1 x 21W & 1 x 28W Twin Lamp	Two	400 x 300	0	None	N/A	165
3000	1760	2 x 28W Twin Lamp	Two	500 x 300	0	None	N/A	170
3175	1760	2 x 28W Twin Lamp	Two	500 x 300	0	None	N/A	180
3350	1980	1 x 28W & 1 x 35W Twin Lamp	Two	600 x 300	0	None	N/A	185
3525	1980	1 x 28W & 1 x 38W Twin Lamp	Two	600 x 300	0	None	N/A	195
3700	2200	2 x 35W Twin Lamp	Two	600 x 300	0	None	N/A	205
3875	2200	2 x 35W Twin Lamp	Two	600 x 300	0	None	N/A	215
4050	2420	2 x 35W Twin Lamp	Two	700 x 300	0	None	N/A	220
4225	2420	2 x 35W Twin Lamp	Two	700 x 300	0	None	N/A	230
4400	2640	2 x 35W Twin Lamp	Two	700 x 300	0	None	N/A	235
4575	2640	2 x 35W Twin Lamp	Two	700 x 300	0	None	N/A	245
4800	2860	2 x 28W & 1 x 35W Twin Lamp	Three	600 x 300	0	None	N/A	260
4975	2860	2 x 28W & 1 x 35W Twin Lamp	Three	600 x 300	0	None	N/A	280
5150	3080	1 x 24W & 2 x 35W Twin Lamp	Three	600 x 300	0	None	N/A	280
5325	3080	1 x 28W & 2 x 35W Twin Lamp	Three	600 x 300	0	None	N/A	300
5500	3300	3 x 35W Twin Lamp	Three	600 x 300	0	None	N/A	295
5675	3300	3 x 35W Twin Lamp	Three	600 x 300	0	None	N/A	315
5850	3520	3 x 35W Twin Lamp	Three	700 x 300	0	None	N/A	310
6025	3520	3 x 35W Twin Lamp	Three	700 x 300	0	None	N/A	330
6200	3740	3 x 35W Twin Lamp	Three	700 x 300	0	None	N/A	325
6375	3740	3 x 35W Twin Lamp	Three	700 x 300	0	None	N/A	345
6550	3960	3 x 35W Twin Lamp	Three	800 x 300	0	None	N/A	340
6725	3960	3 x 35W Twin Lamp	Three	800 x 300	0	None	N/A	360

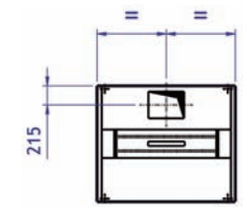

(1) Alternative dimensions / sizes are available upon request.
(2) Maximum Extract Volume base upon use of Superstream baffle type grease filter panels.

One OER

Wall and island hood configurations

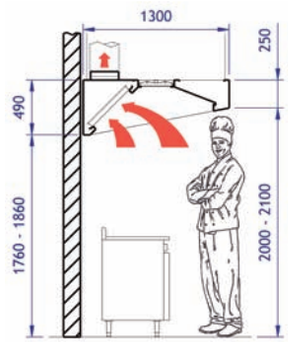

One/OER/1300SSW

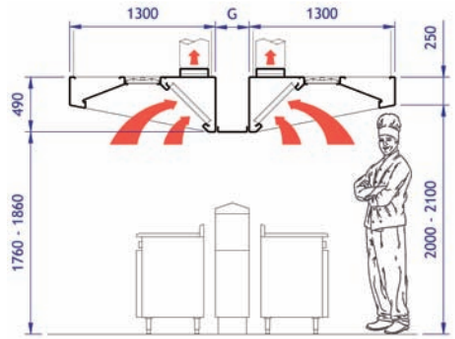

One/OER/DSI-X:G

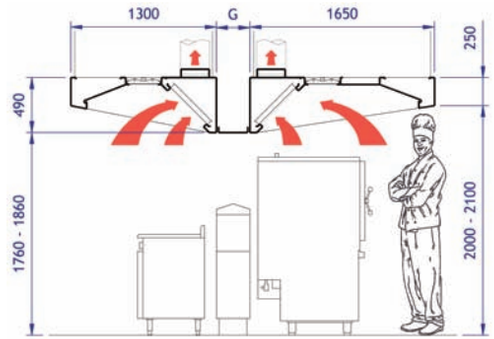

One/OER/DSI-Y:G

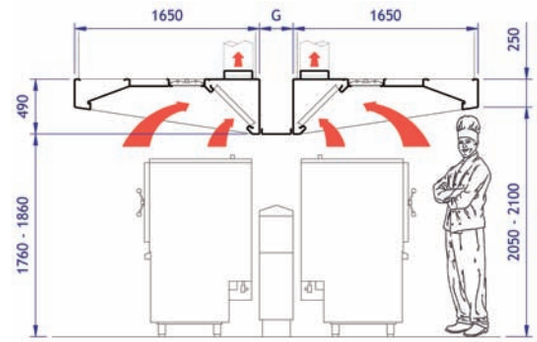

One/OER/DSI-Z:G

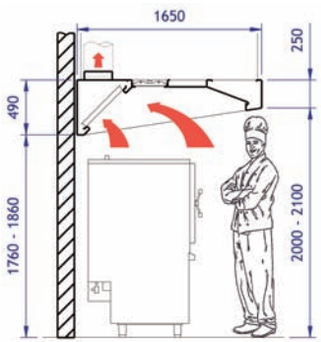

One/OER/1650SSW

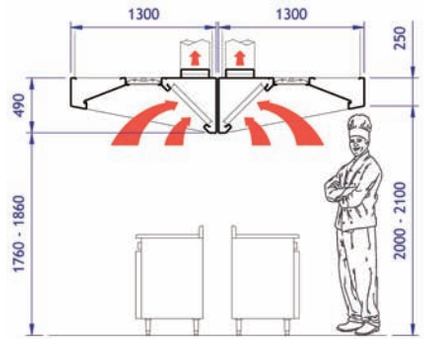

One/OER/DSI-X

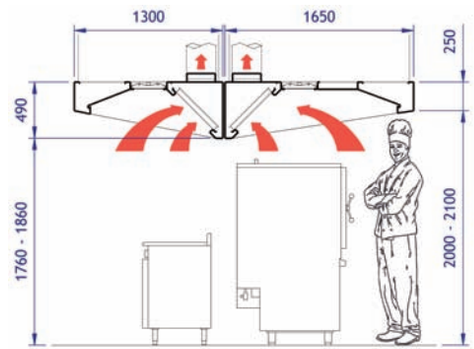

One/OER/DSI-Y

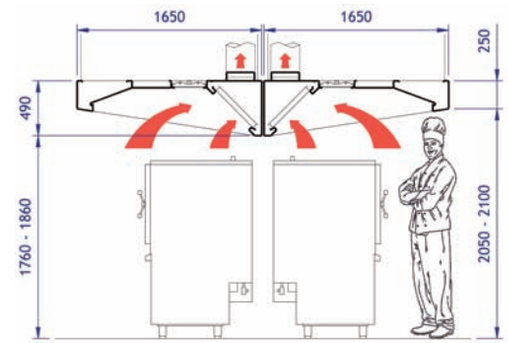

One/OER/DSI-Z

T-Line

120

- Low/high temperature extract fans
- Duty range up to 11.0m³/s
- Low energy/high efficiency fans
- Low SFPs to achieve L2 building regulations
- Up to 120°C operating temperature
- Easy to clean and maintain
- Variety of control options to suit application requirements

T-line *120*
part of a complete range of innovative, flexible products from the HVAC experts

t-line 120
high temperature

VES
Better air for the built environment

T-Line *120*

T-Line *120*

The VES T-Line is ideal for polluted air extract, including kitchen hood, commercial and industrial processes. The T-Line is suitable for up to 120°C constant operating temperaturevs. T-Line features low energy, high efficiency fans with low SFPs for a wide range of applications and locations. Optional controls and demand ventilation deliver even more energy saving benefits and comfort levels to users, buildings and their occupants. T-Line provides both great value and choice to specifiers, contractors and users alike.

T-Line *120* Performance

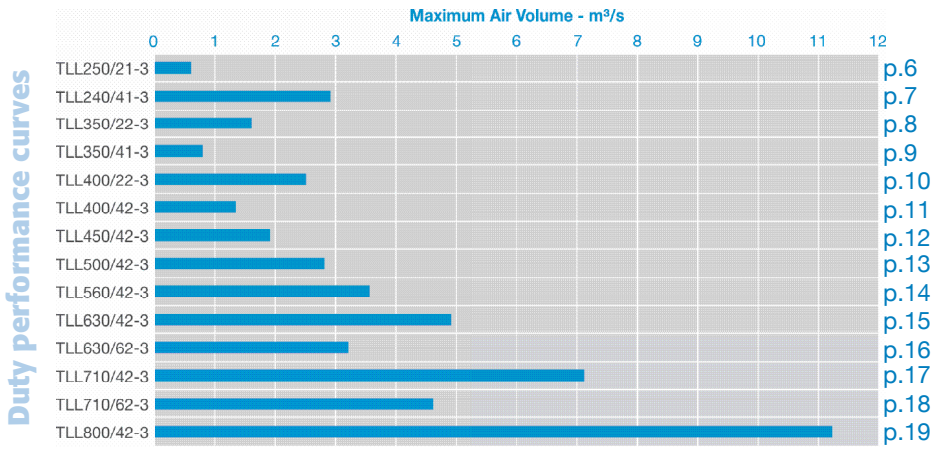

T-Line *120*
Features and benefits

Energy saving
Meet regulations, minimise noise and maximise performance.

Simple installation and maintenance
Simple connection and pre-installed features save on site costs and reduce lead times. Carefully designed maintenance features minimise downtime and total cost of ownership.

Robust construction
Excellent build quality ensures minimal noise breakout, low SFPs and airtight performance.

Versatile options
Versatile location, handing and access options meet the widest range of project requirements.

Energy Saving

Intelligent controls enhance performance whilst saving energy and money.

High temperature extract units

Energy efficient
Energy efficient units with low SFPs to help achieve L2 building regulations. Units are fully tested to DIN 45635-38 (acoustic performance).

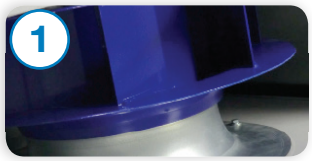

Complete ventilation package
VES offer the expertise, products and services to provide a complete ventilation package including heat recovery unit, integrated controls and site assistance, providing peace of mind through reliable products and expert knowledge.

Easy connections
Fitted with 30mm flange for easy connection to ductwork and ancillaries.

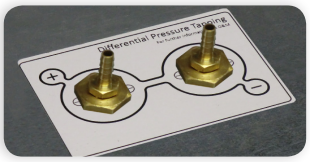

Differential tapping point
Unit airflow is easily commissioned directly at the fan with the use of micromanometer. Removes the requirement for conventional pitot traverse readings.

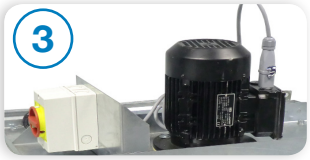

Pre-wired 'Plug and Play' motor
Motor is pre-wired to an external isolator with quick change plug connectors to reduce on-site wiring and to provide easy maintenance.

Maintenance
Access available on both sides of the unit via removable access doors. With motor mounted out of the air stream and backward curved impellers, the units are easy to clean without dismantling.

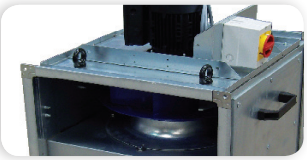

Excellent construction
Rigid single skin galvanised sheet steel.

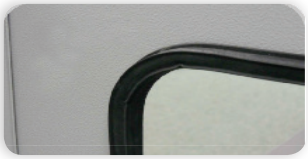

Airtight
High quality, high temperature EPDM memory gasket to ensure a continued airtight seal.

Powdercoat options
External units are powder coated signal grey to RAL7004 as standard, with many other colours available. Plantroom units have natural galvanised finish as a standard and can be powder coated if required.

Motor guard
Motors are rated to IP55 for water and ingress protection. External units are fitted with a protective guard to further protect and prolong motor life.

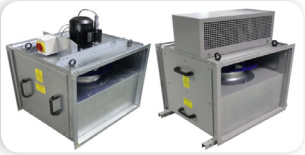

Weatherproof and Plantroom options
Weatherproof (W) and plantroom (P) versions available, including versatile mounting feet for easy installation.

Controls
T-Line 120 with fitted sensor control and commissioning module for differential pressure and air volume, advanced multi applicational inverter, air quality, temperature, humidity and PIR sensors.

Unit configuration
Units can be supplied as straight through (PH/WH) or L shaped (PL/WL) configurations. Plantroom units can be mounted for vertical air flow.

Acoustic control
Acoustic enclosures available for plantroom and external mounting.

BlueSense Energy Saving Package

T-Line 120 with fitted sensor control and comissioning module for differential pressure and air volume

+

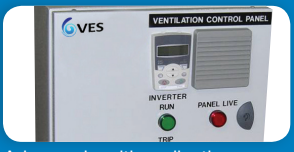

Advanced multi-application inverter

+

Air quality, temperature, humidity and PIR sensors

=

BlueSense

The sign of energy saving products, services and expertise

T-Line *120*

Applications

Kitchen extract application

As well as lower temperature applications, the following illustrations show solutions where higher temperatures and humidity are present.

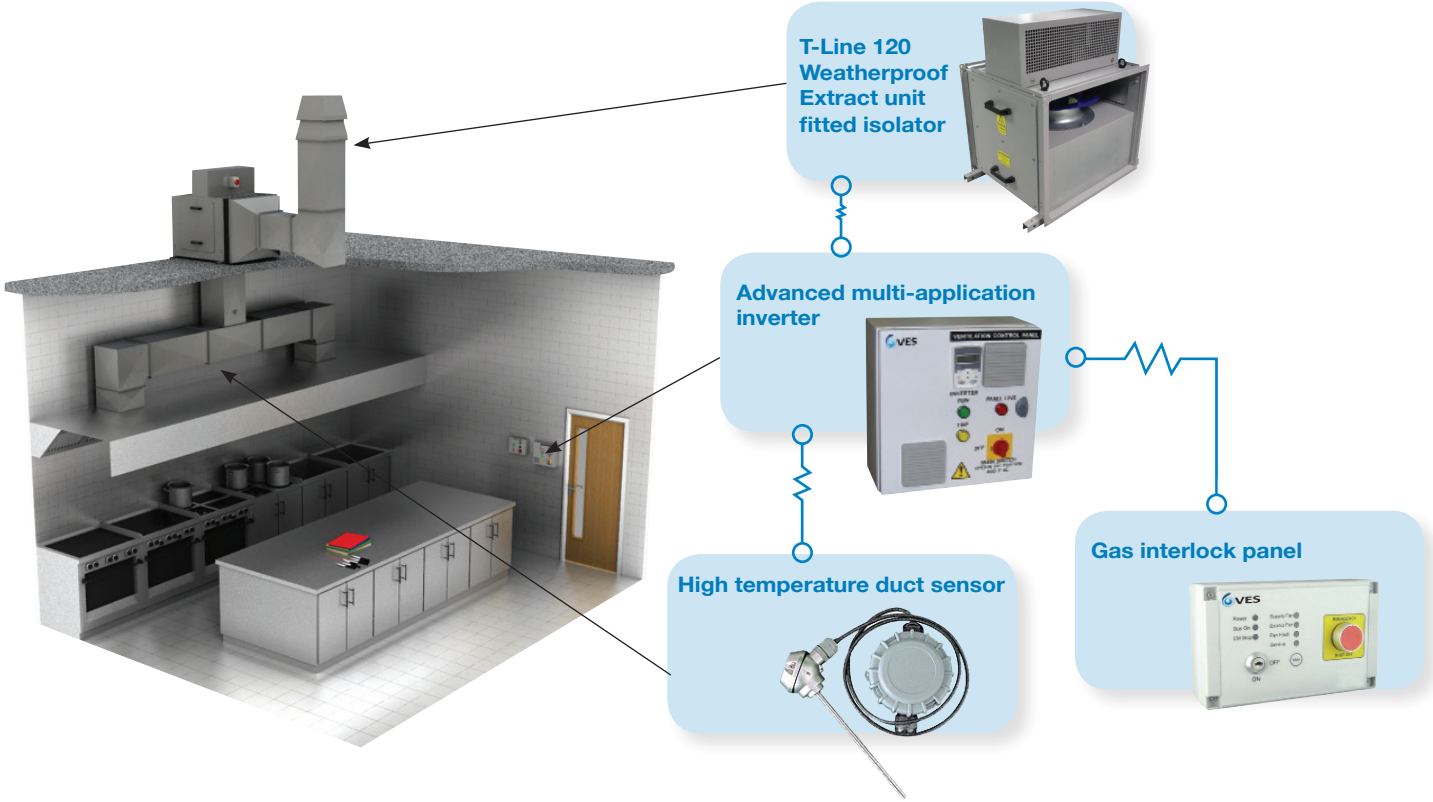

High temperature duct sensor

A 400°C sensor can be mounted within the duct to control the fan speed dependant upon duct temperature; as the temperature of the duct reduces the fan speed can also be reduced to save energy. Using this in conjunction with a VES speed control panel will allow finite adjustment of the speed parameters and temperature control loop, tailored to the suit the application requirements.

Gas safety system

VES also offer a range of gas safety systems that can work in conjunction with the T-Line 120 to provide a versatile kitchen ventilation system. All VES gas safety systems are specifically designed for use in commercial kitchens and to help specifiers, purchasers and installers meet BS6173:2009, the British standards required for new or refit/refurbished kitchen ventilation installations. Our systems combine digital technology and reliable interlocking connections for gas proving in a single easy to install panel.

Features

- Gas proving for use in kitchen applications
- Airflow interlocked gas solenoid control
- Low pressure monitoring for incoming gas control
- Interlocked with fans using Air Pressure Differential switches or current sensors
- Key operation for user override
- LED display of system functions
- Input for remote emergency stop button

Selection data

TLL630/42-3

Product	Size		Pole	Efficiency		Phase		Orientation
TLL	630	/	4	2	-	3	/	

SFP Watts/litres/second = Electrical input power (Watts) / Air volume flow rate (litres/second)

Notes: SFP figures quoted at voltages tested in accordance with BS EN 150 5801:2017

Tolerances:
On flow rates: +/- 5%
On acoustic power pressure levels: +/- 3dB
By octave band: +/- 5dB

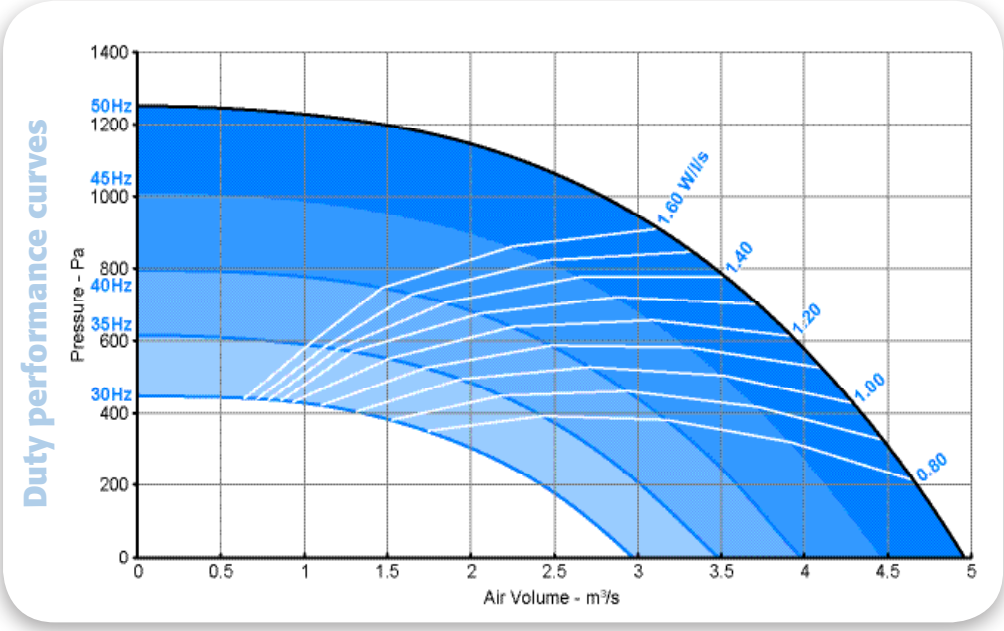

Technical data								
Efficiency	Size	Phase	Motor (kW)	Voltage (VAC)	Fan speed (rpm)	Full load current (A)	Starting current (A)	Speed control
IE2	630	3	5.5	400	1450	10.8	81	Inverter

Noise data

Sound data													
Fan speed setting (Hz)	Fan speed (rpm)	Sound spectrum dB re 10^{-12} W PWL centre frequency (Hz)								Casing noise breakout			
		63	125	250	500	1k	2k	4k	8k	NR @1m	NR @3m	dBA @1m	dBA @3m
50	1450	81	85	89	88	84	80	76	71	66	58	66	59
45	1305	79	82	86	86	82	77	73	68	63	55	63	56
40	1160	76	80	83	83	79	74	70	65	59	52	60	53
35	1015	73	77	80	79	75	71	66	62	56	49	57	50
30	870	70	73	76	75	71	67	62	58	52	45	53	46

Insertion loss table								
	Sound spectrum dB re 10^{-12} W PWL centre frequency (Hz)							
	63	125	250	500	1k	2k	4k	8k
Case insertion loss	+7	-1	-1	-11	-19	-23	-23	-19

For both case and acoustic enclosure insertion loss values, see page 22 for more information.
For unit dimensions, see page 20 for more information.

Note: *Data for design guidance only. Detailed information is available upon request.*

T-Line *120*

Dimensions

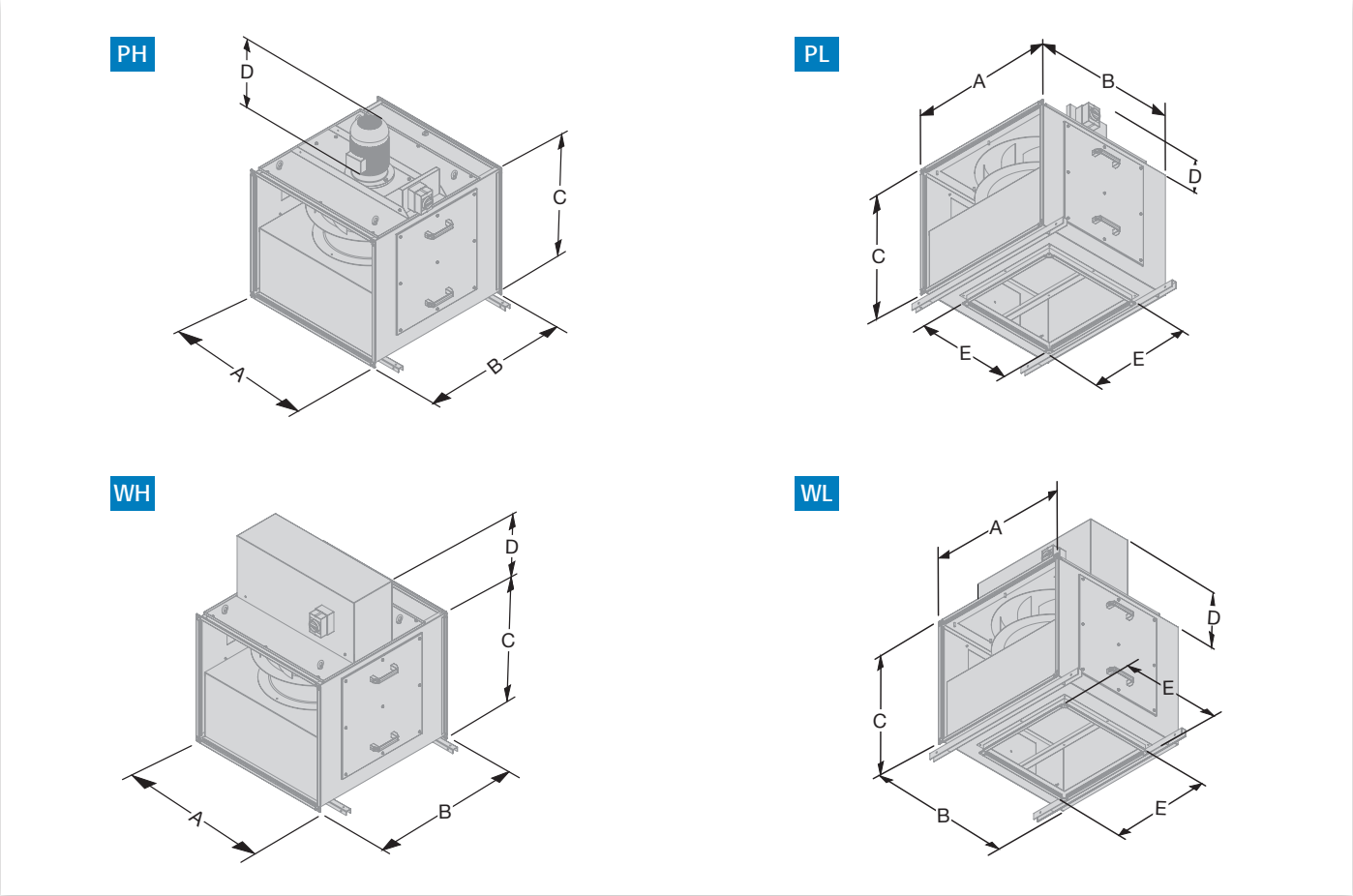

Mounting

Units are supplied to suit mounting with the motor on top as standard. By referring to the O and M documentation, the unit can be re-orientated to suit a side mounted motor with either vertical or horizontal airflow. T-Line 710 and 800 units are not suitable for re-orientation and should be operated with a top mounted motor only.

Dimensions (mm)							
Unit size	**A**	**B**	**C**	**D (P)**	**D (W)**	**E**	**Weight (kg)**
250	380	480	380	215	250	40	30
350	500	600	500	267	300	40	50
400	700	650	600	328	350	40	70
450	750	700	600	267	350	40	95
500	800	800	700	267	350	40	105
560	850	900	750	306	375	40	130
630	900	900	800	420	475	60	200
710	1100	1000	1000	420	475	60	245
800	1250	1150	1050	602	675	60	470

Note: *Data for design guidance only. Detailed information is available upon request.*

Silencers

- Designed to fit directly onto the T-Line 120 unit, with the exception of those marked * which will require a duct transition.
- Silencers are available with splitters that are easily removed for cleaning.
- The set back pointed splitter ends to face fan unit.

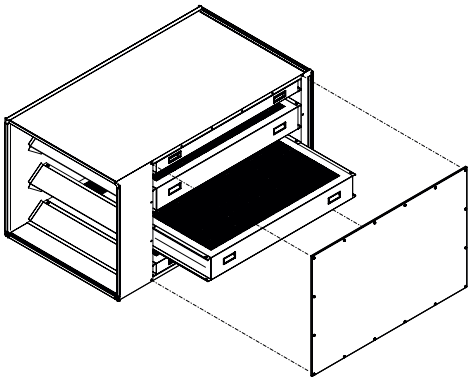

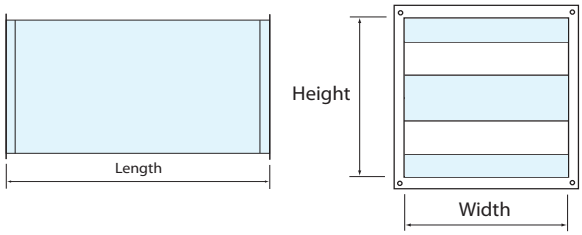

Induct loss sound spectrum dB re 10^{-12} W PWL centre									
		Frequency (Hz)							
To suit T-Line	Silencer model	63	125	250	500	1k	2k	4k	8k
250	TLLVA250/1250	-4	-7	-13	-24	-28	-28	-17	-24
350/2*	TLLVA350/2/1250	-4	-8	-14	-27	-35	-35	-26	-22
350/4	TLLVA350/4/1250	-4	-8	-14	-27	-35	-35	-26	-22
400/2*	TLLVA400/2/1500	-4	-8	-17	-30	-37	-37	-27	-16
400/4	TLLVA400/4/1250	-4	-8	-14	-27	-35	-35	-26	-22
450	TLLVA450/1500	-4	-8	-17	-30	-37	-37	-27	-16
500	TLLVA500/1500	-4	-7	-14	-24	-30	-30	-17	-10
560	TLLVA560/1500	-4	-9	-18	-30	-40	-40	-34	-24
630/4*	TLLVA630/4/1500	-5	-10	-20	-35	-42	-42	-36	-32
630/6	TLLVA630/6/1500	-4	-8	-17	-30	-37	-37	-27	-16
710/4*	TLLVA710/4/1700	-5	-9	-18	-30	-37	-37	-27	-16
710/6	TLLVA710/6/1500	-4	-5	-17	-30	-37	-37	-27	-16
800	TLLVA800/2200	-6	-10	-21	-34	-40	-40	-30	-18

T-Line part numbers marked * are not suitable for direct silencer fitting.

Silencer dimensions (mm)				
Silencer model	Width	Height	Length	Weight (kg)
TLLVA250/1250	380	380	1250	40
TLLVA350/2/1250	600	600	1250	65
TLLVA350/4/1250	500	500	1250	55
TLLVA400/2/1500	800	800	1500	120
TLLVA400/4/1250	700	600	1250	80
TLLVA450/1500	750	600	1500	105
TLLVA500/1500	800	700	1500	120
TLLVA560/1500	850	750	1500	135
TLLVA630/4/1500	1200	1200	1500	255
TLLVA630/6/1500	900	800	1500	145
TLLVA710/4/1700	1350	1350	1700	285
TLLVA710/6/1500	1100	100	1500	200
TLLVA800/2200	1500	1500	2200	450

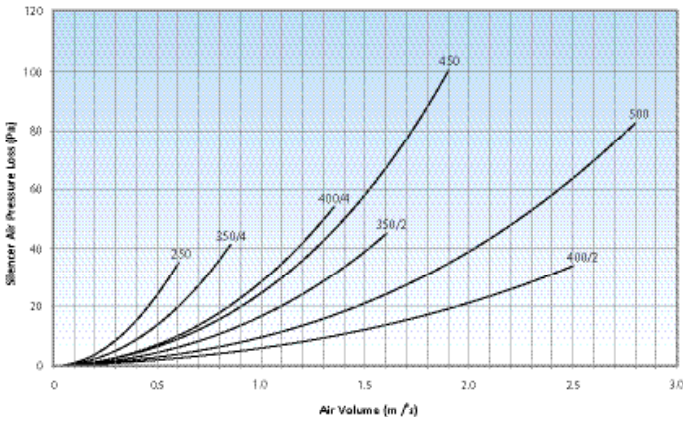

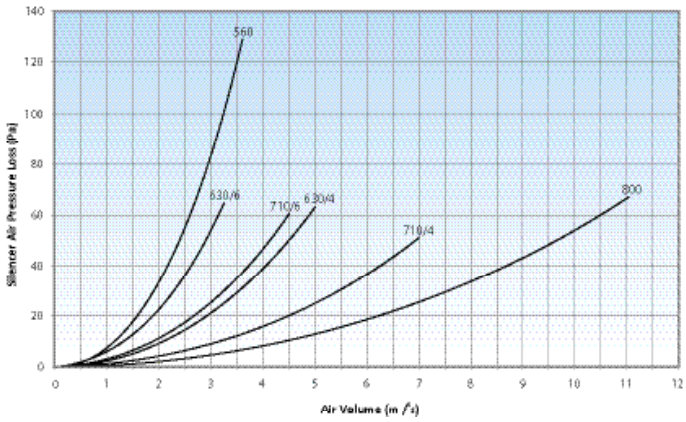

Note: *Data for design guidance only. Detailed information is available upon request.*

T-Line *120*

Horizontal weather cowl - CWL

- Suitable for fitting to end of silencers
- Suitable for fitting to end of units up to 710
- Supplied with 30mm frame
- Powdercoated as standard for external mounting

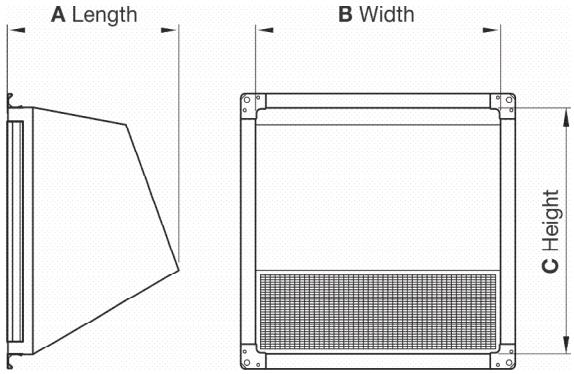

Silencer dimensions (mm)				
Cowl part no.	Width	Height	Length	Weight (kg)
TLLCWL250/H	380	380	300	5
TLLCWL350/2/H*	600	600	350	12
TLLCWL350/4/H	500	500	450	10
TLLCWL400/2/H*	800	800	500	20
TLLCWL400/4/H	700	600	450	14
TLLCWL450/H	750	600	500	16
TLLCWL500/H	800	700	500	19
TLLCWL560/H	850	750	500	20
TLLCWL630/4/H*	1200	12100	600	45
TLLCWL630/6/H	900	800	600	25
TLLCWL710/4/H*	1350	1350	600	50
TLLCWL710/6/H	1100	1000	600	35
TLLCWL800/H*	1500	1500	600	60

Cowl parts marked * are not suitable for fitting direct to the unit.

Acoustic enclosure

- Internally vibration isolated
- High quality acoustic liner
- Suitable for plantroom and external mounting
- Access doors both sides

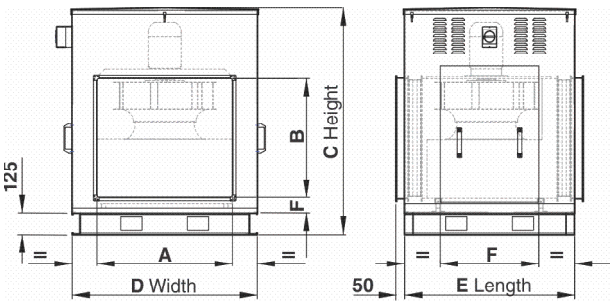

Dimensions (mm)							
Unit size	A	B	C (height)	D (width)	E (length)	F	Weight (kg)
TLLAE250	380	380	970	630	680	91	60
TLLAE350	500	500	1090	750	800	91	100
TLLAE400	700	600	1210	900	900	91	135
TLLAE450	750	600	1285	1023	900	91	170
TLLAE500	800	700	1385	1092	1000	91	215
TLLAE560	850	750	1540	1150	1235	91	255
TLLAE630/4	900	800	1615	1200	1235	111	330
TLLAE630/6	900	800	1615	1200	1235	111	330
TLLAE710/4	1100	1000	1790	1300	1335	111	390
TLLAE710/6	1100	1000	1790	1300	1335	111	390
TLLAE800	1250	1050	1990	1500	1485	111	690

Insertion loss table								
Sound spectrum dB re 10^{-12} w PWL centre frequency Hz								
Unit size	63	125	250	500	1k	2k	4k	8k
TLL250 - TLL450	+4	-3	-8	-17	-30	-33	-34	-28
TLL500 - TLL800	+2	-9	-12	-18	-26	-31	-31	-29

The sum of both the unit casework and the acoustic enclosure insertion value loss.

Anti vibration mounting kit

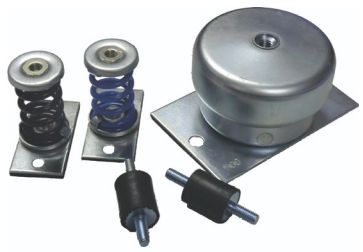

- Spring or rubber AV mounts dependent on unit size
- Double flex flange
- Separate kits for units with bottom inlet

Note: *Data for design guidance only. Detailed information is available upon request.*

Differential pressure and air volume control module

Intelligent control module provides measurement of the differential pressure across the fan or in duct air volume, so that fan commissioning and control is very quick and simple. The module is directly mounted on the air handling unit and factory fitted and tested.

Features

- Calculation of the air volume through input of the inlet ring k factor
- Adjustable set point and control range to generate 0-10V DC signal for fan speed
- Configurable control loop parameters with sensor display
- Three pressure applications 0-200Pa, 0-1000Pa or 0-6000Pa

Air volume and pressure commissioning

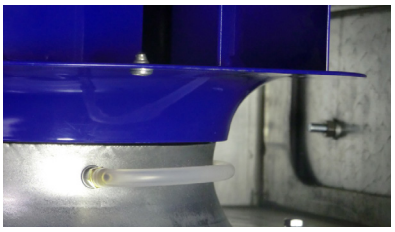

Instant and accurate measuring of the air volume, right at the fan.
There will be no need for duct traverse.

- Each unit is fitted with pressure tapping connections on the outside of the case, these are piped inside the unit to provide an accurate differential static pressure (△p) across the fan
- Air volume may be measured on site using a micromanometer or directly by VES factory fitted intelligent control module
- There is a k factor for each size of impeller/fan
- The VES Control Module will automatically calculate the air volume. The air volume can also be determined using the following calculation: $q_v(m^3/h) = k\sqrt{\triangle p}$

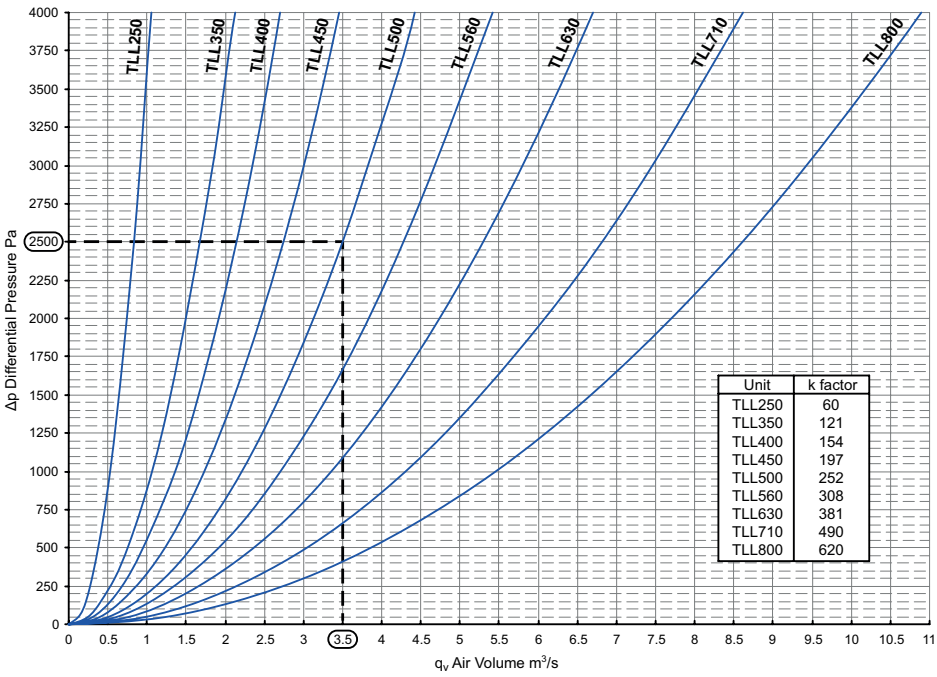

Unit	k factor
TLL250	60
TLL350	121
TLL400	154
TLL450	197
TLL500	252
TLL560	308
TLL630	381
TLL710	490
TLL800	620

Example:

Fan size 500: k factor = 252

Static pressure differential measured at fan 2500Pa (△p)

$q_v = 252 \times \sqrt{2500} = 12600\ m^3/h$

$\frac{12600}{3600} = 3.5 m^3/s$

Note: *Data for design guidance only. Detailed information is available upon request.*

T-Line *120*

Control packages for performance and efficiency

BlueSense™

Save energy and costs with BlueSense controls

Demand ventilation solutions

BlueSense philosophy combines intelligent control technologies with energy saving products, services and engineering expertise. BlueSense helps meet energy reduction commitments by optimising equipment performance, improving energy efficiency, saving money and increasing equipment life expectancy.
BlueSense can be applied to a variety of projects and applications, providing efficient solutions whilst supporting design for best practice and sustainability.

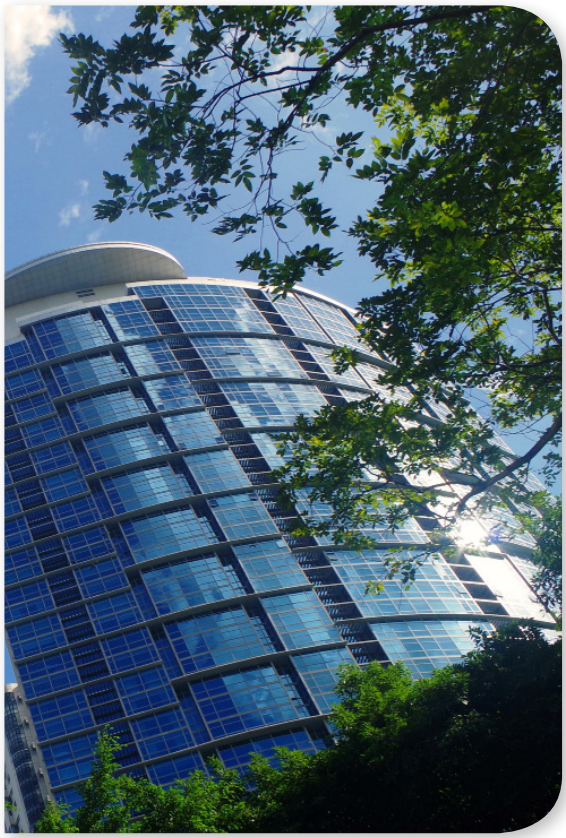

BlueSense features

- Inbuilt intelligent controls technology
- Optimises performance and efficiency
- Demand ventilation control improves air quality, reducing energy consumption and lowering operating costs
- Combined CO_2 and VOC sensing technology with energy efficient speed control
- Extending equipment life expectancy and reducing maintenance
- Short term payback on capital expenditure
- Extended warranty

Prewired/Fitted Controls | Demand Ventilation | Case Construction | Filters | Air Quality | Thyristor Heater

Energy Efficient Fans | Speed Control | Plug & Play | Humidity | Temperature | Heat Recovery

T-line 120 BlueSense

All products in the Ecovent range can form part of a BlueSense energy saving package. Specify BlueSense to ensure units are optimised with pre-wired controls, energy efficient speed controller and air quality sensor. All of these work in unison, reducing energy consumption and saving money.

A BlueSense example

T-Line 120 with fitted sensor control and comissioning module for differential pressure and air volume

+

Advanced multi-application inverter

+

Air quality, temperature, humidity and PIR sensors

=

BlueSense

The sign of energy saving products, services and expertise

BlueSense energy savings

Energy chart life cycle costs

The example below is a typical kitchen extract system, where the demand varies in duty over the working day. The ventilation system operates from 4am until 1am, Monday to Sunday, with a ventilation rate of 1.7m³/s at 250Pa.

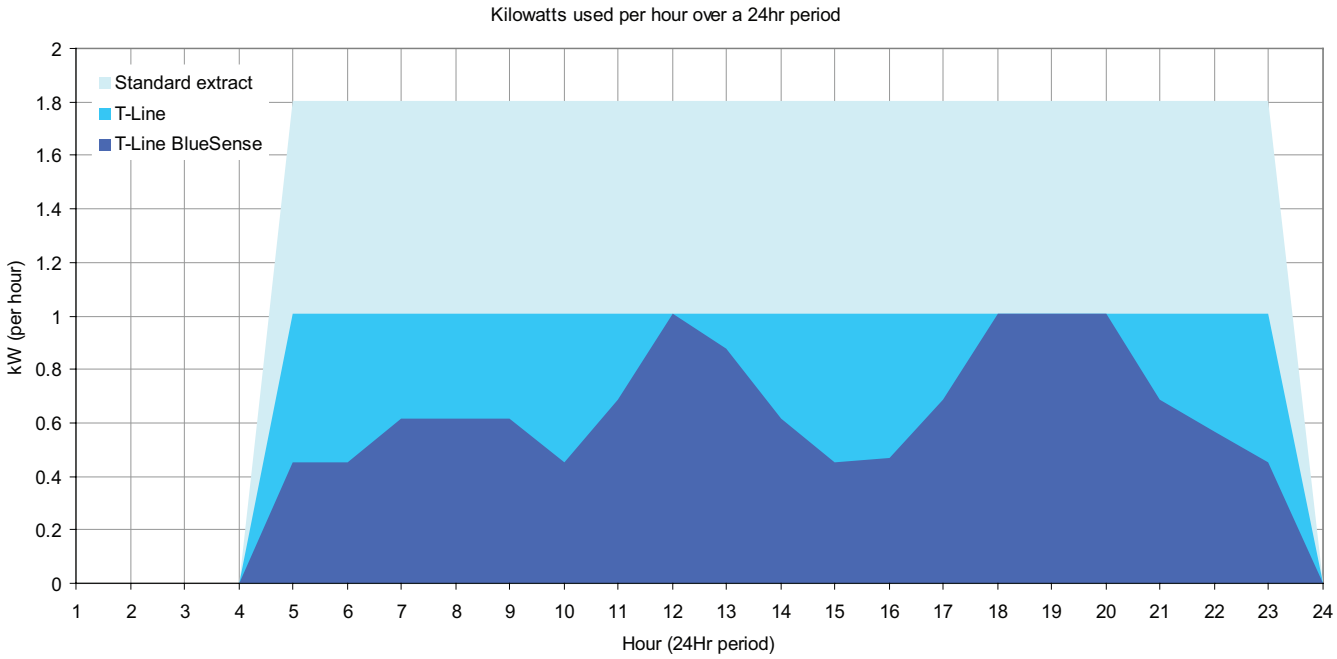

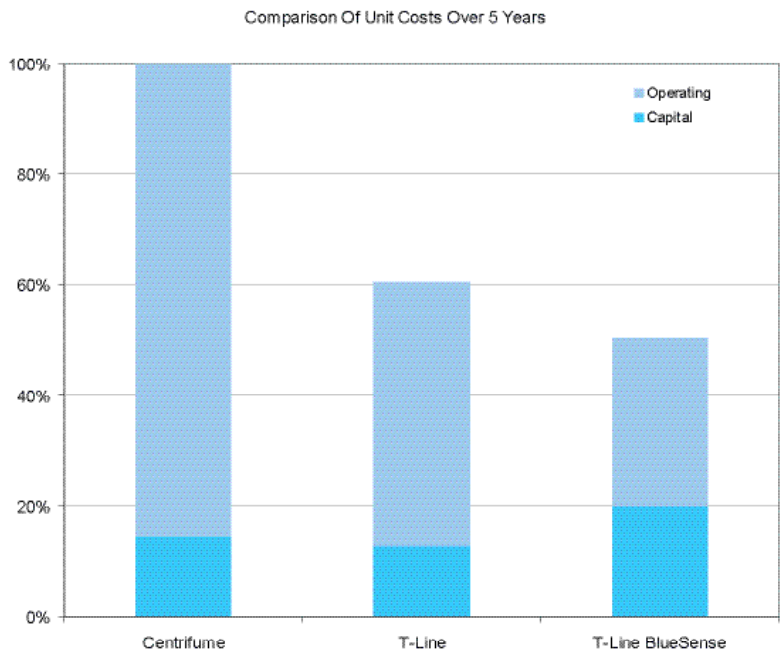

Conclusion

When the T-Line range is combined with BlueSense technology you can help both our environment and minimise your overall life cycle costs and reduce payback period.

VES is experienced at discussing energy requirements with clients, our knowledge and technology can help to identify areas where savings can be made. VES can provide assistance for both new and existing buildings.

BlueSense includes an extended warranty

- 3 years with BlueSense packages
- 5 years with BlueSense package and a Post Install visit

Please quote BlueSense with your order, or contact our specialist sales team for further information.

Air volume commissioning

3 phase speed control using inverters

VES offer a range of speed controllers to suit HVAC applications. The result is a system that is easy to setup, quicker to commissioning with rapid fault diagnostics. The benefits include 0-100% stepless control from a wide range of input signals, inbuilt processor for application programming and tuning coupled with full fan/motor protection and monitoring.

Option 1

Inverter with comprehensive range of functions and IP54 enclosure.

- Complete with operational keypad
- Optional advanced keypad with built-in time clock
- IP54 protection for indoor or external use
- Features include BMS control, remote manual controller, temperature, constant pressure, humidity and CO_2/VOC control
- Main isolating switch with lockable handle
- Panel live indicator
- Damper control
- Volt free run and trip indication
- Connections for motor thermal cutout safety interlock

Option 2

Low cost inverter with IP21 enclosure. Suitable for internal location.

- Complete with operational keypad
- IP21/NEMA1 protection for indoor use
- Features include on/off control at inverter pad with built-in pot for easy ad justment and BMS control. Remote manual controller available (CFSC1

Inverters for 1 phase supply

If only a 230V 1 phase supply is available, it is possible to use a single to three phase inverter. This is available for motors up to 1.5kW. A standard three phase motor would be used which will run on a 3 phase 230V supply from the inverter. The full load current and the input current to the inverter are listed below:

Motor (kW)	0.37	0.55	0.75	1.10	1.50
Inverter output current FLC (A)	2.3	3.2	3.9	6.0	7.8
Input current to inverter FLC (A)	6.2	7.7	10.0	14.7	19.7

Product specification

T-line 120

1.1. **General**

A. Provide a ventilation fan unit to meet the performance and configuration as indicated in the schedule and detail drawings. The unit shall be tested to BS EN ISO 5801:2017 and shall be of the T Line 120 high performance fan type as manufactured by VES Andover Ltd a company covered by BS EN ISO 9001:2015.

1.2. **Unit construction**

A. The casework shall be rigidly constructed from heavy gauge galvanised steel and use a high quality non-leakage gasket on the access doors.

B. Access doors shall be provided for the purpose of maintenance. Suitable access shall be provided adjacent to the unit for maintenance.

C. Weatherproof units shall be supplied with a powder coat finish. Colour to be in accordance with specification.

D. Weatherproof units shall be fitted with motor weather guard to prevent water ingress as manufactured by VES Andover Ltd.

E. The unit shall be supplied be supplied with Lifting eyes for safe handling. Lifting eyes will be manufactured in accordance with DIN 580 and conform to equipment safety standard BS EN60950-1:2006.

F. The ventilation unit shall be supplied with connections to directly fit to a 30mm ductwork system.

1.3. **Impeller and Motor**

A. The impeller and motor shall be selected to provide a low energy solution and conform to building regulations part L.

B. The impeller shall be a high efficiency centrifugal backward curved design and shall be of a fully welded steel construction.

C. The impeller shall be balanced to DIN ISO 14694.

D. The motor shall be fitted external to the airflow with the options of either IE1 high efficiency or IE2 improved high efficiency class F, IP55 motors in accordance to schedule.

E. The motor shall be manufactured to IEC60034.

F. The ventilation fan unit is suitable for continuous running at 120°C.

G. The motor shall be fitted with Plug connection for ease of maintenance.

1.4. **Ancillaries**

A. The ventilation unit and ancillaries shall be of the T Line 120 type as manufactured by VES Andover Ltd.

1.5. **Controls**

A. The unit shall be supplied as standard pre-wired to an external isolator.

B. BlueSense controls combine pre-wired factory fitted and tested differential pressure and air volume control module, energy efficient advanced application speed controller and temperature, humidity or air quality sensor; providing effective and efficient control of the ventilation system as supplied by VES.

C. If the differential pressure and air volume control module is indicated within the schedule the unit shall be supplied with the module factory fitted and tested.

D. If speed control is indicated in the schedule the unit shall be supplied with a loose speed controller for remote mounting.

E. The unit shall be fully compatible with a standard range of sensor options to effectively operate the ventilation system as supplied by VES. The sensors shall be fully compatible with the V65 speed controller. Sensor options include; High Temperature Duct Sensor, Room/Duct Humidity Sensor, Room/Duct Air Quality Sensor.

Download specification from www.ves.co.uk

Product Code Guide

Product	Fan dia.	Pole	Efficiency	Phase	Wiring	Orientation
TLL	250	/2	1	-1	null	/PL
	350	/4	2	-3	S	/PH
	400	/6			D	/WL
	450					/WH
	500					
	560					
	630					
	710					
	800					

Sample code
TLL250/21-1/WH

1 = IE1
2 = IE2

S = Star
D = Delta