Drainage Completion Report

for

Proposed Development

Gathurst Street,
Manchester, M18 8GR

Client Name: Whitfield Brown
Our ref: LRD30068
Date: May 2021
Revision: 001

SUTCLIFFE

Drainage Strategy & Flood Risk Assessment

DOCUMENT VERIFICATION

Report Reference: LRD30068 Issue: 01 Date: May 2021

Prepared by:

Name:	Andy Day
Title:	Executive Associate
Qualifications:	BEng

Checked / Approved by:

Name:	Martin Pocock
Title:	Director
Qualifications:	BEng(Hons) CEng FICE MCIHT CMgr FCMI C.WEM MCIWEM

Revision History:

Rev	Date	Description	Prepared	Checked	Approved
01	May 2021	Issued for Planning	AD	MP	MP

This document has been prepared by Sutcliffe within the terms of the Contract with the Client to whom this document is addressed. Sutcliffe disclaims any responsibility to the Client and others in respect of matters outside the scope of the said contract. No person other than the Client shall rely on it in any respect and Sutcliffe shall owe no duty of care to any such third party.

Sutcliffe

Contents

1.0 Introduction

2.0 As Built Drainage Drawings

3.0 United Utilities Approvals

4.0 Construction Photographs

Sutcliffe

1.0 Introduction

This report has been provided to confirm construction of the surface water drainage for the development in accordance with Planning Condition 14 (b).

14 (b) The development shall be constructed and completed in accordance with the approved details and verification details of completed drainage works submitted for approval by the City Council as local planning authority prior to the occupation of the development.

2.0 As Built Drainage Drawings

Drainage on site has been constructed in accordance with the following drawings:

Drg. No. GAT-SUT-ZZ-00-DR-C-620-0001	Proposed Drainage Plan
Drg. No. GAT-SUT-ZZ-00-DR-C-630-0001	Typical Orifice Flow Control Manhole Detail
Drg. No. GAT-SUT-ZZ-00-DR-C-630-0002	1:20 Manhole Detail
Drg. No. GAT-SUT-ZZ-00-DR-C-665-0001	Typical Drainage Details Sheet 1
Drg. No. GAT-SUT-ZZ-00-DR-C-666-0001	Typical Drainage Details Sheet 2

SLAB PENETRATIONS AND SETTING OUT TO BE COORDINATED BY THE ARCHITECT PRIOR TO CONSTRUCTION

"AS-BUILT" DRAWING

THE INFORMATION PROVIDED ON THESE AS BUILT DRAWINGS IS TAKEN FROM OUR CONSTRUCTION DRAWINGS AND THE NOTIFICATION FROM SITE THAT NO CHANGES HAVE OCCURRED DURING CONSTRUCTION. ANY NOTIFIED CHANGES HAVE BEEN INCORPORATED. SUTCLIFFE CAN TAKE NO RESPONSIBILITY FOR INFORMATION ON OUR AS-BUILT DRAWINGS IF IT IS FOUND TO DIFFER FROM OUR CONSTRUCTION ISSUE DRAWINGS AND SUTCLIFFE HAVE NOT BEEN NOTIFIED OF ANY CHANGES.

General Notes

DO NOT SCALE OFF THIS DRAWING

THIS DRAWING TO READ IN CONJUNCTION WITH ALL RELEVANT STRUCTURAL AND ARCHITECTURAL DRAWINGS AND SPECIFICATIONS.

ALL DIMENSIONS TO BE CHECKED ON SITE BY THE CONTRACTOR / FABRICATOR PRIOR TO COMMENCEMENT OF WORKS.

ALL DIMENSIONS ARE IN MILLIMETRES UNLESS STATED OTHERWISE.

ALL WORKS TO BE CARRIED OUT IN STRICT ACCORDANCE WITH THE ENGINEER'S SPECIFICATIONS, RELEVANT BRITISH STANDARDS, STATUTORY HEALTH AND SAFETY/C.D.M. REGULATIONS, RELEVANT CODES OF PRACTICE AND THE CURRENT EDITION OF THE BUILDING REGULATIONS.

FOR FINAL SETTING OUT INFORMATION RELATING TO GRID LINES AND WALL POSITIONS REFER TO THE ARCHITECT'S DRAWINGS.

PROPOSED DRAINAGE

ADOPTABLE SEWERS SHOULD BE A MINIMUM OF 1m AND MANHOLES 0.5m FROM KERB FACES AND SERVICE MARGINS.

PRIOR TO CONSTRUCTION THE CONTRACTOR IS TO ENSURE THAT THE PROPOSED DRAINAGE DOES NOT CLASH WITH THE EXISTING SERVICES. THE CONTRACTOR IS TO ALLOW FOR THIS PROVISION WITHIN THE TENDER SUM.

THE CONTRACTOR SHALL BE RESPONSIBLE FOR ATTAINING ALL NECESSARY APPROVALS FOR ANY SERVICE DIVERSIONS REQUIRED TO FACILITATE THE PROPOSED WORKS

SURFACE WATER DRAINAGE

ALL PRIVATE SURFACE WATER DRAINAGE TO BE 100MM ø AT 1:100 GRADIENT UNLESS NOTED OTHERWISE.

AN ALLOWANCE TO BE MADE FOR DRIVEWAY GULLIES AND ASSOCIATED DRAIN RUNS WHERE APPLICABLE

ALL FLOWS FROM PRIVATE CELLULAR SW STORARGE TO BE DISCHARGED THROUGH A SILT TRAP MANHOLE PRIOR TO BEING DISCHARGED INTO ANY PUBLIC SEWERS.

ALL SURFACE WATER GULLEYS TO BE TRAPPED.

FOUL WATER / COMBINED DRAINAGE

ALL PRIVATE FOUL WATER DRAINAGE TO BE 100MM ø AT 1:80 GRADIENT UNLESS NOTED OTHERWISE

INTERNAL VENTING OF DRAINAGE SYSTEM TO ARCHITECTS DETAILS

PRIVATE DRAINAGE KEY

- SITE BOUNDARY
- EXTG SURFACE WATER DRAINAGE
- EXTG FOUL WATER DRAINAGE
- EXTG COMBINED DRAINAGE
- PRIVATE FOUL WATER DRAINAGE
- PRIVATE SURFACE WATER DRAINAGE
- PRIVATE COMBINED DRAINAGE
- SEWER EASEMENT (AS DIMENSIONED)
- GULLEY / BACK INLET GULLEY CONNECTION
- RE — RODDING EYE
- RAIN WATER PIPE & GULLEY CONNECTION
- MAC — MINI ACCESS CHAMPER
- SOIL PIPE CONNECTION REFER TO ARCHITECTS PLAN FOR VENTING DETAILS
- PPIC — POLYPROPYLENE INSPECTION CHAMBER
- DG — DRIVEWAY GULLEY
- ACO CHANNEL DRAIN

Rev	Description	Date	By	Chkd
X	AS BUILT ISSUE	17.02.21	MJG	AD

Drawing Status

AS BUILT DRAWING

Sutcliffe
Civil & Structural Engineers, Building Surveyors & Geo-Environmentalists
www.sutcliffe.co.uk
LIVERPOOL 0151 227 2155 | MANCHESTER 0161 817 5160 | WREXHAM 01978 664071 | LONDON 020 74 284156

Client

ONE MANCHESTER

Project

GATHURST STREET
MANCHESTER

Drawing Title

PROPOSED DRAINAGE PLAN

Date	Drawn By	Checked By
OCTOBER 2019	MJG	AD

Scale at A1	Project Number	Revision
1:100	30068	X

Sheet Number

GAT-SUT-ZZ-00-DR-C-620-0001

NOTE: REFER TO DRAINAGE PLAN FOR LOCATION AND DEPTHS.

"AS-BUILT" DRAWING

THE INFORMATION PROVIDED ON THESE AS BUILT DRAWINGS IS TAKEN FROM OUR CONSTRUCTION DRAWINGS AND THE NOTIFICATION FROM SITE THAT NO CHANGES HAVE OCCURRED DURING CONSTRUCTION. ANY NOTIFIED CHANGES HAVE BEEN INCORPORATED. SUTCLIFFE CAN TAKE NO RESPONSIBILITY FOR INFORMATION ON OUR AS-BUILT DRAWINGS IF IT IS FOUND TO DIFFER FROM OUR CONSTRUCTION ISSUE DRAWINGS AND SUTCLIFFE HAVE NOT BEEN NOTIFIED OF ANY CHANGES.

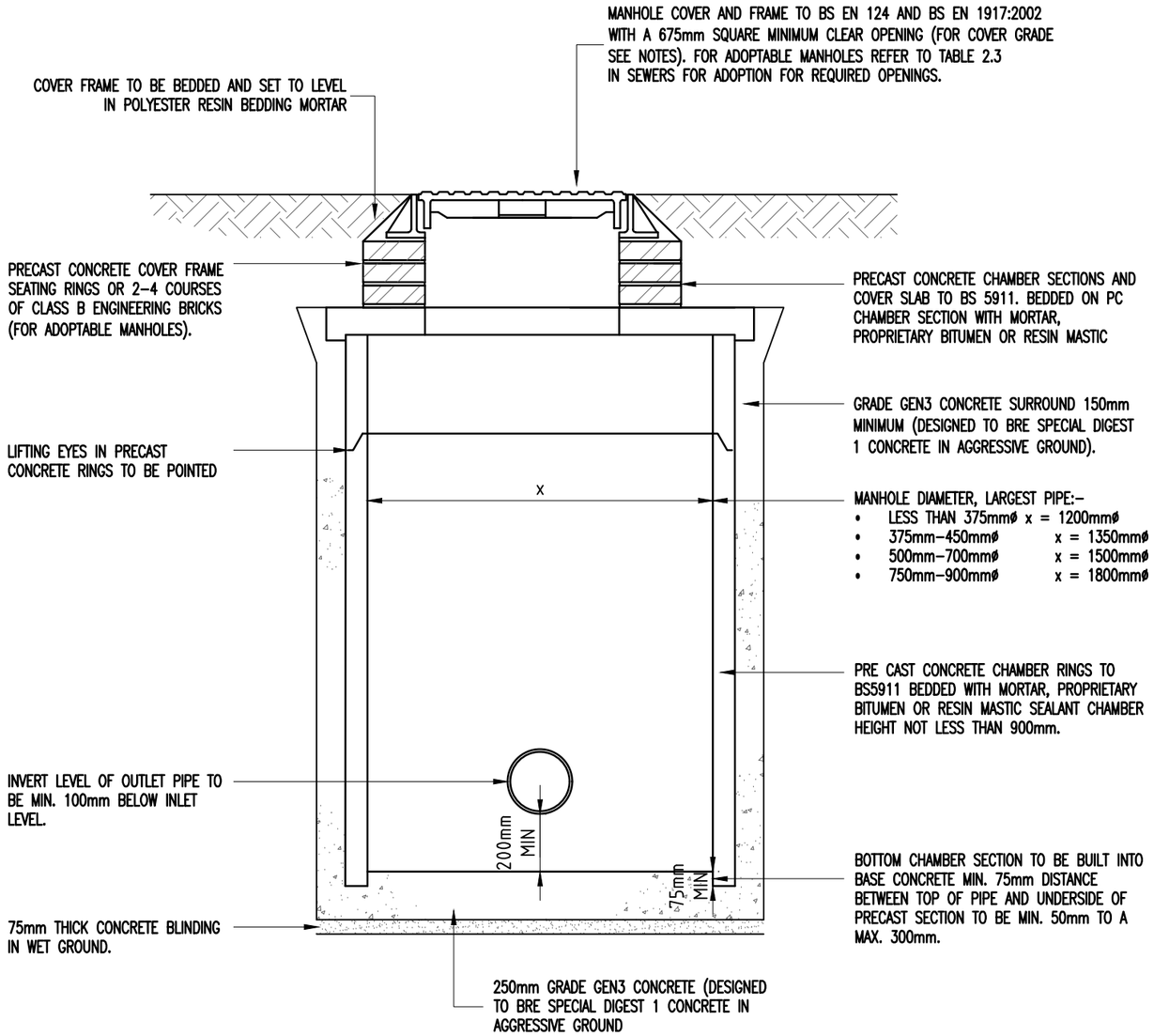

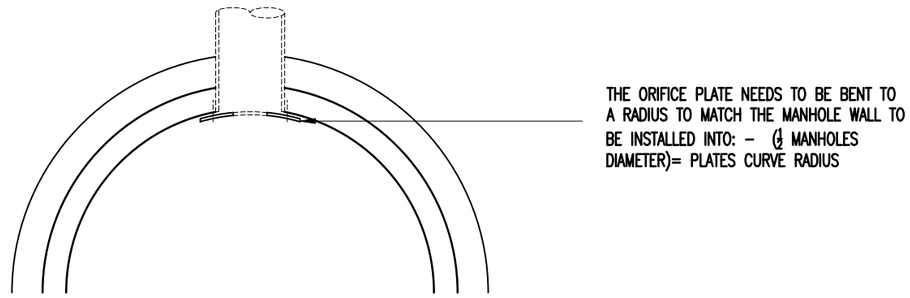

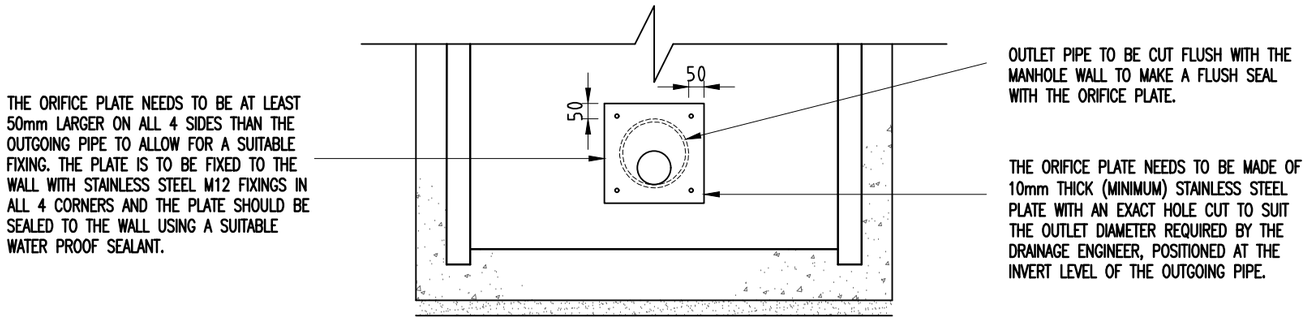

FLOW CONTROL MH 24 = 51MM ORIFICE
FLOW CONTROL MH 35 = 52MM ORIFICE

Rev	Description	Date	By	Chkd
X	AS BUILT DRAWING	17.05.21	MJG	AD

Sutcliffe
Structural & Civil Engineering
Geotechnical & Environmental Investigations
Building Surveying
Pre Planning Services
Liverpool Head Office: 0151 227 3155 | Manchester Office: 0161 817 5180 | North Wales Office: 01978 664 071 | London Office: 020 8016 4320
www.sutcliffe.co.uk

Drawing Status: AS BUILT DRAWING

Client: ONE MANCHESTER

Project: GATHURST STREET MANCHESTER

Drawing Title: TYPICAL ORIFICE FLOW CONTROL MANHOLE DETAIL

Date	Drawn By	Checked By
NOV 20	MJG	AD

Scale at A3	Project Number
NTS	30068

Sheet Number	Revision
GAT-SUT-ZZ-00-DR-C-630-0001	X

NOTE: REFER TO DRAINAGE PLAN FOR LOCATION.

MANHOLE REF	RING DIA	COVER LEVEL	INVERT LEVEL	SUMP DEPTH	MANHOLE FUNCTION
MH31	1.5m ø	80.780m	79.670m	0.000m	COMBINED
		LARGEST PIPE ø 0.225m	MANHOLE DEPTH 1.110m	COVER TO SOFFIT 0.885m	MANHOLE TYPE SHALLOW MANHOLE

COVER DETAILS:
1200x675 KITE MARKED TO BS EN124 CLASS D400, 150mm DEEP WITH MIN. 1 COURSE & MAX. 3 COURSES OF ADJUSTING BRICKWORK.

ACCESS DETAILS:
PLASTIC ENCAPSULATED CARBON STEEL DOUBLE STEP ACCESS AS UNITED UTILITIES DETAIL ON DRAWING REF STND_01_013

VARIABLE FEATURES:

N/A

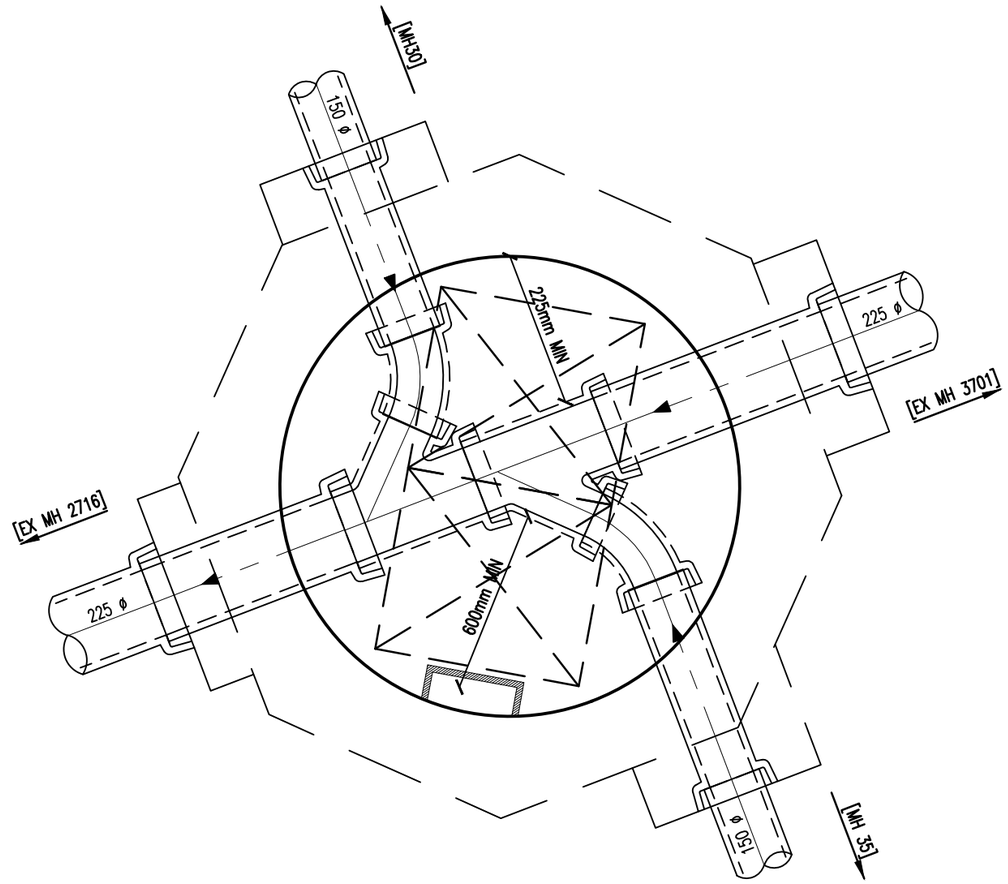

"AS-BUILT" DRAWING

THE INFORMATION PROVIDED ON THESE AS BUILT DRAWINGS IS TAKEN FROM OUR CONSTRUCTION DRAWINGS AND THE NOTIFICATION FROM SITE THAT NO CHANGES HAVE OCCURRED DURING CONSTRUCTION. ANY NOTIFIED CHANGES HAVE BEEN INCORPORATED. SUTCLIFFE CAN TAKE NO RESPONSIBILITY FOR INFORMATION ON OUR AS-BUILT DRAWINGS IF IT IS FOUND TO DIFFER FROM OUR CONSTRUCTION ISSUE DRAWINGS AND SUTCLIFFE HAVE NOT BEEN NOTIFIED OF ANY CHANGES.

Sutcliffe
Structural & Civil Engineering
Geotechnical & Environmental Investigations
Building Surveying
Pre Planning Services
Liverpool Head Office: 0151 227 3155
Manchester Office: 0161 817 5180
North Wales Office: 01978 664 071
London Office: 020 8016 4320
www.sutcliffe.co.uk

Drawing Status
AS BUILT DRAWING

Client
ONE MANCHESTER

Project
GATHURST STREET
MANCHESTER

Drawing Title
1:20 MANHOLE DETAIL

Rev	Description	Date	By	Chkd
X	AS BUILT DRAWING	17.05.21	MJG	AD

Date	Drawn By	Checked By
FEB 21	MJG	AD

Scale at A3	Project Number
1:20	30068

Sheet Number	Revision
GAT-SUT-ZZ-00-DR-C-630-0002	X

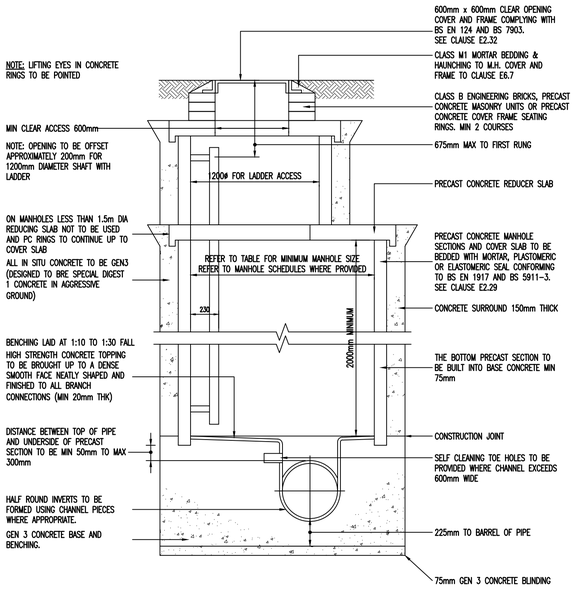

TYPICAL MANHOLE DETAIL TYPE 1

DEPTH FROM GROUND LEVEL TO SOFFIT OF PIPE 3m TO 6m

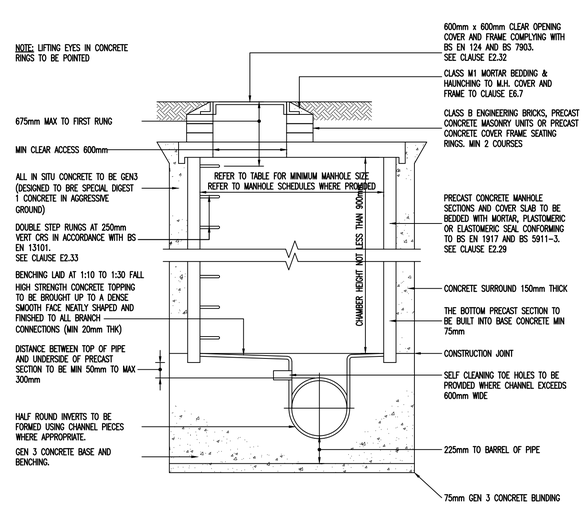

TYPICAL MANHOLE DETAIL TYPE 2

MAXIMUM DEPTH FROM GROUND LEVEL TO SOFFIT OF PIPE 3.0m

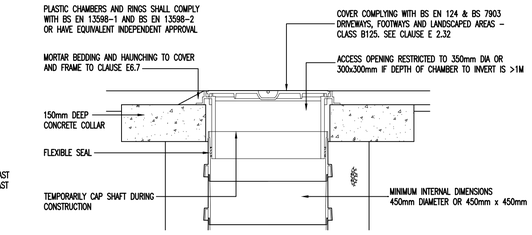

TYPE 3 ALTERNATIVE TOP DETAILS SITED IN DOMESTIC DRIVEWAYS OR FOOTWAYS

(N.T.S)

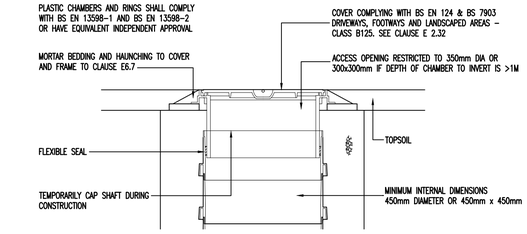

TYPE 3 ALTERNATIVE TOP DETAILS SITED IN DOMESTIC GARDENS

(N.T.S)

EMBEDMENT DIMENSIONS FOR RIGID PIPES					
NOMINAL INT PIPE DIA	DIMENSION Y1 EVEN TRENCH BOTTOM (MIN)	DIMENSION Y2 ROCK OR UNEVEN TRENCH BOTTOM (MIN)	PROCESSED GRANULAR MATERIAL	DIMENSION Z (MIN)	MAX PERMITTED TRENCH WIDTH
150	100	200	10MM SINGLE SIZED OR 14MM TO 5MM GRADED	100	750
225	100	200		100	825
300	100	200		100	925
375	100	200	14MM SINGLE SIZED OR 14MM TO 5MM GRADED	100	1050
450	150	200		150	1150
525	150	250		150	1200
600	150	250		150	1350
675	150	250		225	1450
750	225	300		225	1500
825	225	300		225	1600
900	225	300	20MM SINGLE SIZED OR 20MM TO 5MM GRADED	225	1900
975	225	300		300	2000
1050	225	300		300	2100
1125	225	300		300	2200
1200	250	350		300	2300
1350	375	450		375	2500
1500	375	450		375	2700
1650	375	450		450	2800
1800	375	500	40MM SINGLE SIZED OR 40MM TO 5MM GRADED	450	3100
1950	400	500		525	3200
2100	425	650		525	3400
2400	450	675		600	3700

NOMINAL INT PIPE DIA	MINIMUM INTERNAL CHAMBER DIA
LESS THAN 375	1200
375 – 450	1350
500 – 700	1500
750 – 900	1800
GREATER THAN 900	PIPE DIA + 900

NOTE:

1 ALL DIMENSIONS IN MM

2 A CONCRETE SURROUND IS REQUIRED FOR MANHOLES INSTALLED IN AREAS OF UNSTABLE GROUND, UNDER CONDITIONS OF FLOATATION OR WHERE SUBJECTED TO EXCEPTIONAL OR ECCENTRIC LOADS, IN WHICH CASE A 150mm SURROUND OF AT LEAST 20N/CU. mm CONCRETE SHOULD BE PROVIDED. ANY JOINTS SHOULD BE STAGGERED WITH THE PRECAST CONCRETE JOINTS.

3 DOUBLE STEPS SHALL BE PLASTIC ENCAPSULATED CARBON TO BS EN 1247-2 MANHOLE STEPS. STEP IRONS AT 300 CENTRES HORIZONTALLY AND VERTICALLY MAY BE USED AS AN ALTERNATIVE TO DOUBLE STEPS.

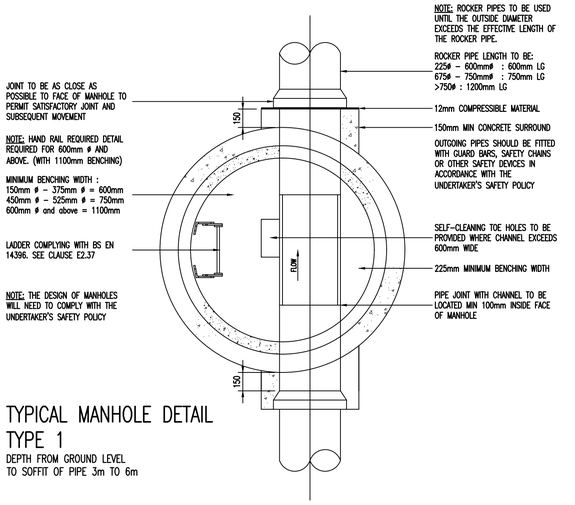

TYPICAL MANHOLE DETAIL TYPE 1

DEPTH FROM GROUND LEVEL TO SOFFIT OF PIPE 3m TO 6m

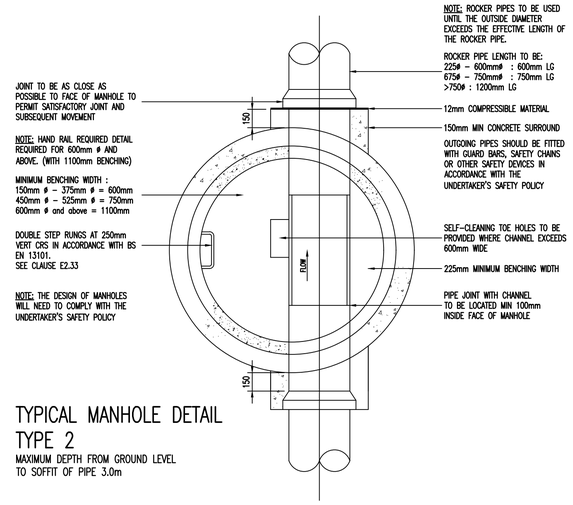

TYPICAL MANHOLE DETAIL TYPE 2

MAXIMUM DEPTH FROM GROUND LEVEL TO SOFFIT OF PIPE 3.0m

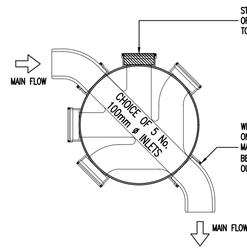

PLAN ON TYPE 3 INSPECTION CHAMBER

(N.T.S)

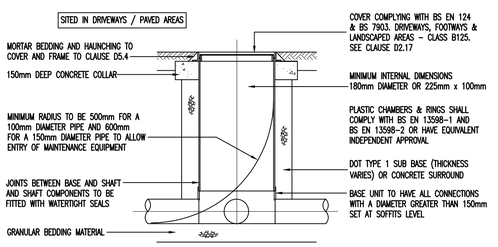

SECTION THROUGH TYPE 4 INSPECTION CHAMBER (FLEXIBLE MATERIAL) MAXIMUM DEPTH FROM COVER LEVEL TO SOFFIT OF PIPE 2M, NON-ENTRY

(N.T.S)

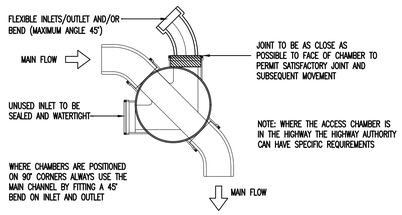

PLAN ON TYPE 4 INSPECTION CHAMBER

(N.T.S)

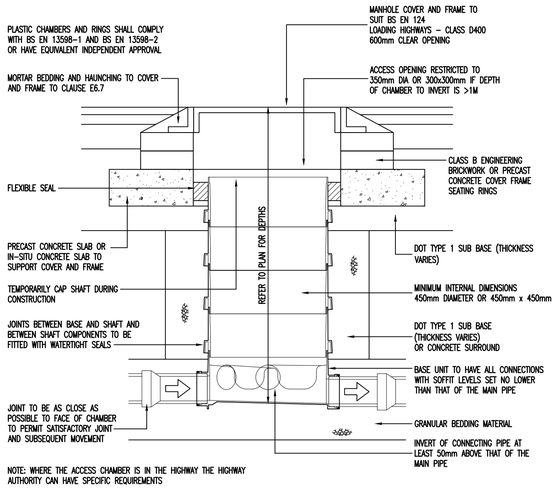

SECTION THROUGH TYPE 3 INSPECTION CHAMBER (FLEXIBLE MATERIAL) MAX. DEPTH FROM COVER LEVEL TO SOFFIT OF PIPE IN AREAS SUBJECT TO VEHICLE LOADING 3M, NON-ENTRY

(N.T.S)

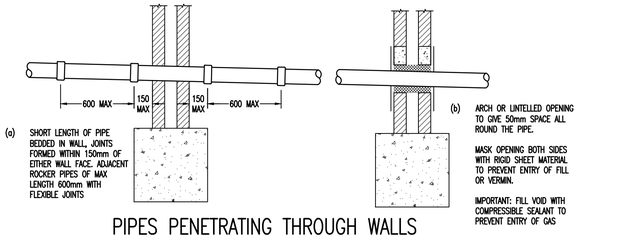

PIPES PENETRATING THROUGH WALLS

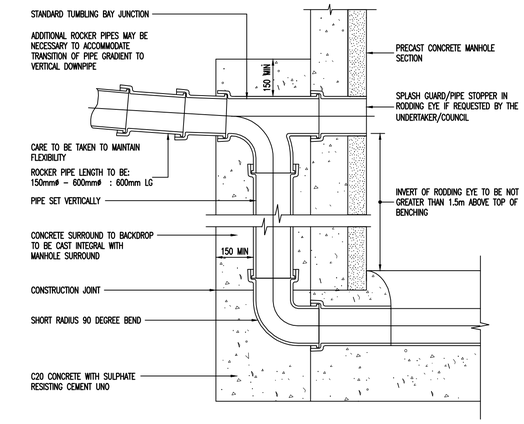

TYPICAL BACKDROP DETAIL

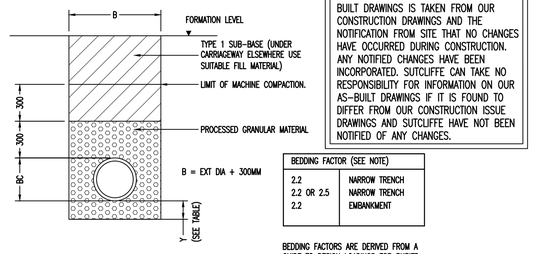

BEDDING FACTOR (SEE NOTE)	
2.2	NARROW TRENCH
2.2 OR 2.5	NARROW TRENCH
2.2	EMBANKMENT

BEDDING FACTORS ARE DERIVED FROM A GUIDE TO DESIGN LOADINGS FOR BURIED RIGID PIPES" AND IGN 4-11-02 "REVISED BEDDING FACTOR FOR VITRIFIED CLAY DRAINS AND SEWERS".

TYPE 7 BEDDING DETAILS

(EMBEDMENT CLASS S)

General Notes

DO NOT SCALE OFF THIS DRAWING

THIS DRAWING TO READ IN CONJUNCTION WITH ALL RELEVANT STRUCTURAL AND ARCHITECTURAL DRAWINGS AND SPECIFICATIONS.

ALL DIMENSIONS TO BE CHECKED ON SITE BY THE CONTRACTOR / FABRICATOR PRIOR TO COMMENCEMENT OF WORKS.

ALL DIMENSIONS ARE IN MILLIMETRES UNLESS STATED OTHERWISE.

ALL WORKS TO BE CARRIED OUT IN STRICT ACCORDANCE WITH THE ENGINEER'S SPECIFICATIONS, RELEVANT BRITISH STANDARDS AND WHERE APPLICABLE LOCAL AUTHORITIES REQUIREMENTS.

ANY AMBIGUITIES, OMISSIONS AND ERRORS ON DRAWINGS, SHALL BE BROUGHT TO THE ENGINEERS ATTENTION IMMEDIATELY.

THE CONTRACTOR SHALL CONFIRM THE LOCATION AND LEVEL OF EXISTING DRAINAGE OUTFALLS PRIOR TO COMMENCEMENT OF THE DRAINAGE WORKS.

EXACT LOCATIONS OF PROPOSED MANHOLES AND INSPECTION CHAMBERS TO BE DETERMINED ON SITE

ALL PIPES BUILT INTO THE MANHOLE INVERTS SHALL BE INSTALLED WITH SOFFITS LEVELS UNO.

CONNECTIONS TO ROAD GULLEYS SHALL BE IN 150MM NOMINAL BORE. CONNECTIONS TO OTHER TERMINAL FITTINGS SHALL BE IN 100MM NOMINAL BORE PIPE UNO.

COVER LEVELS SHOWN ARE APPROXIMATE AND SHALL BE ADJUSTED AND CONFIRM ON SITE BY THE CONTRACTOR.

THE CONTRACTOR SHALL PROTECT THE PIPELINE FROM DAMAGE BY SITE TRAFFIC DURING CONSTRUCTION.

PIPEWORK AND FITTINGS SHALL COMPLY WITH THE FOLLOWING REQUIREMENTS EXCEPT WHERE NOTED OTHERWISE:

CLAYWARE PIPES TO BS 65

100 AND 150MM DIAMETER, MINIMUM CRUSHING STRENGTH 50KN/M ON CLASS F BEDDING.

TRENCHES IN HIGHWAYS AND CAR PARKING AREAS SHALL BE BACKFILLED WITH TYPE 1 GRANULAR SUB-BASE.

SOFT SPOTS IN THE TRENCH FORMATION SHALL BE REMOVED AND REPLACED WITH GRANULAR BEDDING UNLESS INSTRUCTED OTHERWISE.

ROAD GULLEYS SHALL BE CONSTRUCTED USING A 900MM DEEP X 450MM DIAMETER GULLEY POT, SURROUNDED BY 150MM THICKNESS C20 CONCRETE, WITH RODDING EYE AND CHAINED STOPPER.

GULLEY COVERS SHALL BE GRADE B CAPTIVE HINGED DUCTILE IRON TO BS497 BLACK COATED.

UNLESS NOTED OTHERWISE MANHOLE COVERS SHALL BE DUCTILE IRON TO BS497 BLACK COATED WITH 600 X 600 GRADE A.

CONNECTIONS IN PIPES BETWEEN MANHOLES RUNS SHALL BE FORMED BY USING PURPOSE MADE CLAYWARE, 45° JUNCTION FITTINGS TO BS65. BEND FITTINGS SHALL BE PROVIDED WHERE APPROPRIATE TO DIRECT THE FLOW INTO THE MAIN RUNS.

ALTERNATIVELY MAIN PIPES MAY BE DIAMOND CORED TO TAKE LATERAL CONNECTIONS WITH A SADDLE FITTING TO BS65 AND 150MM C20 CONCRETE SURROUND.

THE CONTRACTOR SHALL CONFIRM THE LOCATION OF ALL EXISTING STATUTORY UNDERTAKERS APPARATUS AND SERVICE CONNECTIONS BY TRIAL PITS PRIOR TO OPENING UP FOR THE WORKS.

THE PURPOSE OF THIS DRAWING IS FOR TYPICAL CONSTRUCTION DETAILS ONLY. MANHOLES / PIPE DIAMETERS / SUMP DEPTHS ETC WILL VARY ON PLAN.

REFER TO DRAINAGE LAYOUT DRAWING FOR ALL PIPE SIZES, MANHOLE SIZES, PIPE LENGTHS, SUMP DEPTHS, STORAGE TANK CONFIGURATIONS, COVER LEVELS AND INVERT LEVELS

Rev	Description	Date	By	Chkd
X	AS BUILT ISSUE	13.05.21	MJG	AD

Drawing Status

AS BUILT DRAWING

Sutcliffe
Civil & Structural Engineers, Building Surveyors & Geo-Environmentalists
www.sutcliffe.co.uk
LIVERPOOL 0151 227 3155 | MANCHESTER 0161 817 5166 | WREXHAM 01978 664071 | LONDON 020 74 594106

"AS-BUILT" DRAWING

THE INFORMATION PROVIDED ON THESE AS BUILT DRAWINGS IS TAKEN FROM OUR CONSTRUCTION DRAWINGS AND THE NOTIFICATION FROM SITE THAT NO CHANGES HAVE OCCURRED DURING CONSTRUCTION. ANY NOTIFIED CHANGES HAVE BEEN INCORPORATED. SUTCLIFFE CAN TAKE NO RESPONSIBILITY FOR INFORMATION ON OUR AS-BUILT DRAWINGS IF IT IS FOUND TO DIFFER FROM OUR CONSTRUCTION ISSUE DRAWINGS AND SUTCLIFFE HAVE NOT BEEN NOTIFIED OF ANY CHANGES.

Client

ONE MANCHESTER

Project

GATHURST STREET
MANCHESTER

Drawing Title

TYPICAL DRAINAGE DETAILS
SHEET 1 OF 2

Date	Drawn By	Checked By
OCTOBER 2019	MJG	AD

Scale at A1	Project Number	Revision
AS NOTED	30068	X

Sheet Number

GAT-SUT-ZZ-XX-DR-C-665-0001

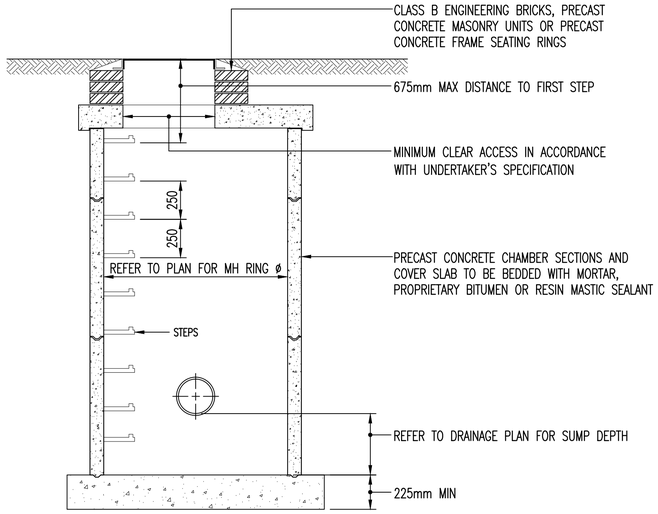

TYPICAL SECTION THROUGH SUMP MANHOLE

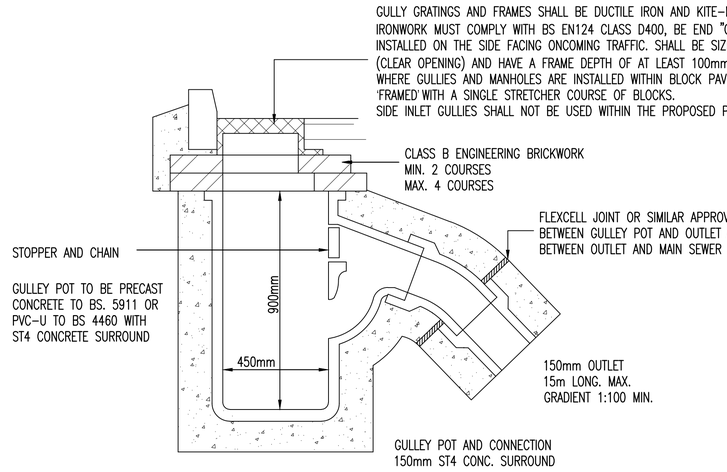

TYPICAL ROAD GULLEY DETAIL

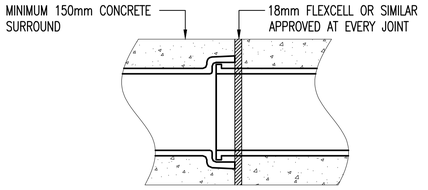

SOCKET & SPIGOT TYPE

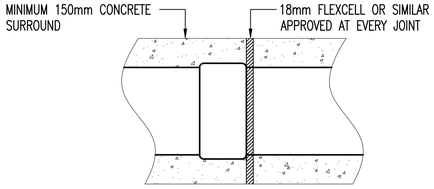

SLEEVE JOINTED TYPE

PLAN ON CONCRETE ENCASED PIPES

REQUIRED IN ROADWAYS & OTHER AREAS OF VEHICULAR TRAFFIC WHERE PIPE COVER IS LESS THAN 900mm (TO SOFFIT OF PIPE)

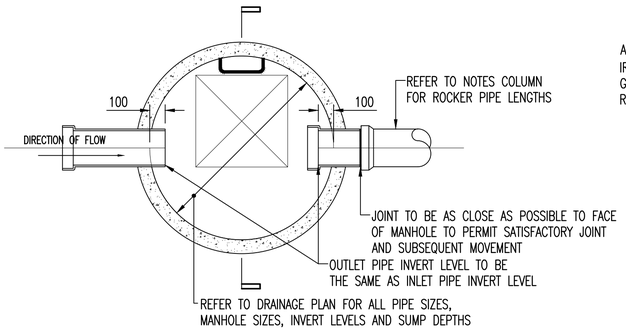

TYPICAL PLAN ON SUMP MANHOLE

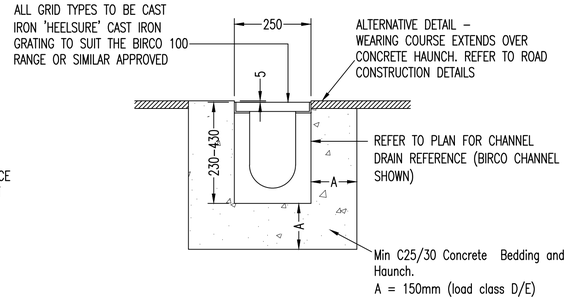

CHANNEL DRAIN IN BITUMINOUS CONSTRUCTION

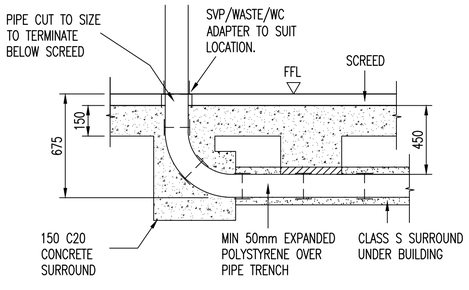

CONNECTION TO R.W.P/SWP/WASTE INSIDE BUILDING

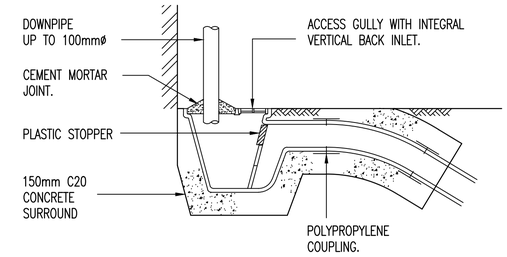

ACCESS GULLY DETAIL

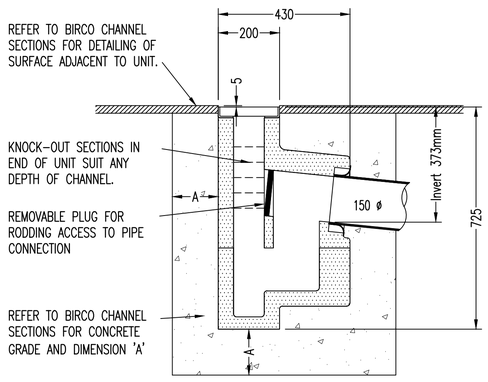

CHANNEL DRAIN – INLINE SIDE OUTFALL

(UNIT SHOWN IS BIRCO 100, 500mm LONG)

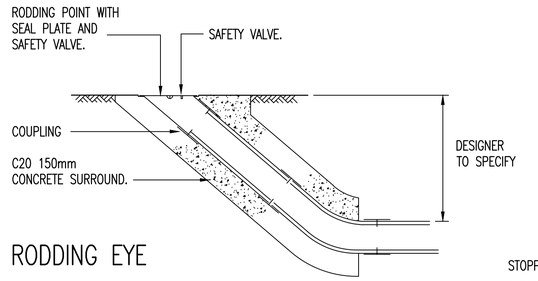

RODDING EYE

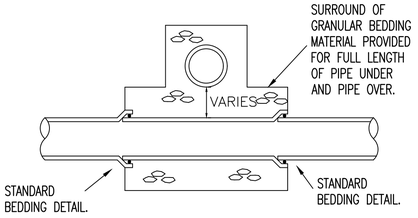

PIPE CROSS OVER DETAIL

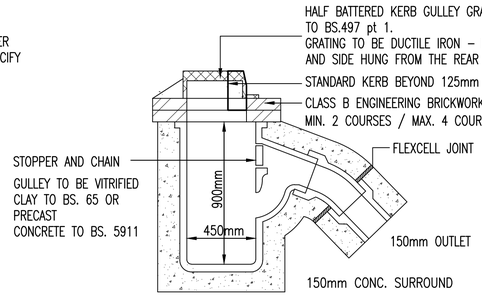

SIDE INLET GULLEY DETAIL

"AS-BUILT" DRAWING

THE INFORMATION PROVIDED ON THESE AS BUILT DRAWINGS IS TAKEN FROM OUR CONSTRUCTION DRAWINGS AND THE NOTIFICATION FROM SITE THAT NO CHANGES HAVE OCCURRED DURING CONSTRUCTION. ANY NOTIFIED CHANGES HAVE BEEN INCORPORATED. SUTCLIFFE CAN TAKE NO RESPONSIBILITY FOR INFORMATION ON OUR AS-BUILT DRAWINGS IF IT IS FOUND TO DIFFER FROM OUR CONSTRUCTION ISSUE DRAWINGS AND SUTCLIFFE HAVE NOT BEEN NOTIFIED OF ANY CHANGES.

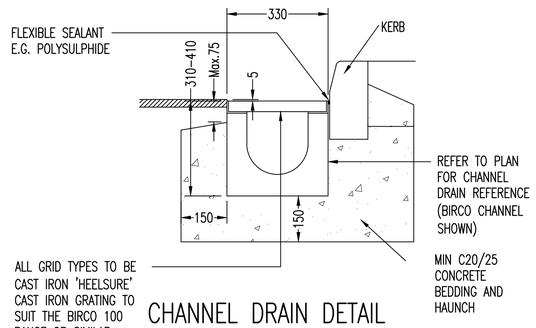

CHANNEL DRAIN DETAIL KERB SIDE APPLICATION

General Notes

DO NOT SCALE OFF THIS DRAWING

THIS DRAWING TO READ IN CONJUNCTION WITH ALL RELEVANT STRUCTURAL AND ARCHITECTURAL DRAWINGS AND SPECIFICATIONS.

ALL DIMENSIONS TO BE CHECKED ON SITE BY THE CONTRACTOR / FABRICATOR PRIOR TO COMMENCEMENT OF WORKS.

ALL DIMENSIONS ARE IN MILLIMETRES UNLESS STATED OTHERWISE.

ALL WORKS TO BE CARRIED OUT IN STRICT ACCORDANCE WITH THE ENGINEER'S SPECIFICATIONS, RELEVANT BRITISH STANDARDS AND WHERE APPLICABLE LOCAL AUTHORITIES REQUIREMENTS.

ANY AMBIGUITIES, OMISSIONS AND ERRORS ON DRAWINGS, SHALL BE BROUGHT TO THE ENGINEERS ATTENTION IMMEDIATELY.

THE CONTRACTOR SHALL CONFIRM THE LOCATION AND LEVEL OF EXISTING DRAINAGE OUTFALLS PRIOR TO COMMENCEMENT OF THE DRAINAGE WORKS.

EXACT LOCATIONS OF PROPOSED MANHOLES AND INSPECTION CHAMBERS TO BE DETERMINED ON SITE

ALL PIPES BUILT INTO THE MANHOLE INVERTS SHALL BE INSTALLED WITH SOFFITS LEVELS UNO.

CONNECTIONS TO ROAD GULLEYS SHALL BE IN 150MM NOMINAL BORE. CONNECTIONS TO OTHER TERMINAL FITTINGS SHALL BE IN 100MM NOMINAL BORE PIPE UNO.

COVER LEVELS SHOWN ARE APPROXIMATE AND SHALL BE ADJUSTED AND CONFIRM ON SITE BY THE CONTRACTOR.

THE CONTRACTOR SHALL PROTECT THE PIPELINE FROM DAMAGE BY SITE TRAFFIC DURING CONSTRUCTION.

PIPEWORK AND FITTINGS SHALL COMPLY WITH THE FOLLOWING REQUIREMENTS EXCEPT WHERE NOTED OTHERWISE:

CLAYWARE PIPES TO BS 65

100 AND 150MM DIAMETER, MINIMUM CRUSHING STRENGTH 50KN/M ON CLASS F BEDDING.

TRENCHES IN HIGHWAYS AND CAR PARKING AREAS SHALL BE BACKFILLED WITH TYPE 1 GRANULAR SUB-BASE.

SOFT SPOTS IN THE TRENCH FORMATION SHALL BE REMOVED AND REPLACED WITH GRANULAR BEDDING UNLESS INSTRUCTED OTHERWISE.

ROAD GULLEYS SHALL BE CONSTRUCTED USING A 900MM DEEP X 450MM DIAMETER GULLEY POT, SURROUNDED BY 150MM THICKNESS C20 CONCRETE, WITH RODDING EYE AND CHAINED STOPPER.

GULLEY COVERS SHALL BE GRADE B CAPTIVE HINGED DUCTILE IRON TO BS497 BLACK COATED.

UNLESS NOTED OTHERWISE MANHOLE COVERS SHALL BE DUCTILE IRON TO BS497 BLACK COATED WITH 600 X 600 GRADE A.

CONNECTIONS IN PIPES BETWEEN MANHOLES RUNS SHALL BE FORMED BY USING PURPOSE MADE CLAYWARE, 45° JUNCTION FITTINGS TO BS65. BEND FITTINGS SHALL BE PROVIDED WHERE APPROPRIATE TO DIRECT THE FLOW INTO THE MAIN RUNS.

ALTERNATIVELY MAIN PIPES MAY BE DIAMOND CORED TO TAKE LATERAL CONNECTIONS WITH A SADDLE FITTING TO BS65 AND 150MM C20 CONCRETE SURROUND.

THE CONTRACTOR SHALL CONFIRM THE LOCATION OF ALL EXISTING STATUTORY UNDERTAKERS APPARATUS AND SERVICE CONNECTIONS BY TRIAL PITS PRIOR TO OPENING UP FOR THE WORKS.

THE PURPOSE OF THIS DRAWING IS FOR TYPICAL CONSTRUCTION DETAILS ONLY. MANHOLES / PIPE DIAMETERS / SUMP DEPTHS ETC WILL VARY ON PLAN.

REFER TO DRAINAGE LAYOUT DRAWING FOR ALL PIPE SIZES, MANHOLE SIZES, PIPE LENGTHS, SUMP DEPTHS, STORAGE TANK CONFIGURATIONS, COVER LEVELS AND INVERT LEVELS

Rev	Description	Date	By	Chkd
X	AS BUILT ISSUE	13.05.21	MJG	AD

Drawing Status: AS BUILT DRAWING

Sutcliffe
Civil & Structural Engineers, Building Surveyors & Geo-Environmentalists
www.sutcliffe.co.uk
LIVERPOOL 0151 227 3155 | MANCHESTER 0161 817 5180 | WREXHAM 01978 664071 | LONDON 020 74 564536

Client: ONE MANCHESTER

Project: GATHURST STREET MANCHESTER

Drawing Title: TYPICAL DRAINAGE DETAILS SHEET 2 OF 2

Date	Drawn By	Checked By
OCTOBER 2019	MJG	AD

Scale at A1	Project Number	Revision
AS NOTED	30068	X

Sheet Number: GAT-SUT-ZZ-XX-DR-C-666-0001

3.0 United Utilities Approvals

Below, please find approvals received from United Utilities for the connections to the public sewer.

United Utilities Water Ltd
Developer Services & Metering
Second Floor, Grasmere House,
Lingley Mere Business Park,
Warrington
WA5 3LP

Telephone: 0345 072 6067
Wastewaterdeveloperservices@uuplc.co.uk

Your Reference	EC5134
Our Reference	4200032735
Date	18 February 2021

Dear Aaron

Location:	Gathurst Street Abbey Hey Manchester M18 8GR

The '**Request for Permission to work on a public sewer**' (Part 2) has been approved and you may now arrange to carry out the connection.

Any work on the public sewer should be carried out between the hours of 8am–4pm Monday to Friday and the site agent needs to log on and off with our central team on **07826 539459**.

You are reminded that a minimum of **five clear working days**' notice shall be given to the inspector Phil Harper before work commences to enable the necessary inspection to be arranged. Please quote your reference number EC5134

Should the works be covered before inspection, the company reserves the right to carry out any excavation and work necessary (including CCTV inspection) to ensure a proper connection has been made. The cost of such work will be recoverable from you.

This approval does not constitute consent to enter onto private land or to break open the public highway for the purpose of making the connection. Such permissions are required from the landowner or Highway Authority, as appropriate. The sewer connection should not be made until all necessary permissions under the Planning or Building Acts are obtained.

Should you require further information please call 0345 072 6067.

Yours faithfully

Sue king

For Developer Services and Metering

S106 Part 2 'Request for permission to work on a public sewer (LOW RISK)' Approval Notice

United Utilities Reference Number:	**EC5134**
Contractor details	
Contractor/company name	J A Yates Construction Ltd
Contractor email address	edhorton@jayatesconstruction.co.uk
Works Supervisor	Terry Spencer
Principal Contractor details (if applicable):	
Company name	Whitfield and Brown Developments Ltd
Name of contact for project	Gareth Disley
Email address	Gareth_disley@whitfieldbrown.com
Date of proposed works	**ASAP**
Site details: The site / property which is proposed for connection to the public sewer	
Site address *(including postcode)*	Gathurst Street, Abbey Hey, Manchester. M18 8GR

APPROVED

Your application for permission to work on the public sewer has been approved.

You are now authorised to make the connection to the public sewer in accordance with the information provided on your application **'Request for permission to work on a public sewer'**.
This approval is only valid for works on a manhole/ inspection chamber less than 1.5m deep (or within excavations less than 1.5m deep for junction connections) and where the pipe is less than 300mm in diameter.

Please provide 5 days' notice to the Development Support Technician named below to arrange an inspection of the works.

The excavation should not be backfilled until the United Utilities appointed person has inspected the works.
United Utilities reserve the right to request a connection to the public sewer be laid open for inspection.
United Utilities will also be entitled to recover all costs associated for any excavation, remedial works and repeat visits if these requirements are not met.

You must log on and off the sewer network at the beginning and end of each shift when working on the public sewer by calling

07826 539459

and quoting the United Utilities reference number at the top of this decision notice.

Any gas alarms, residual risks or sewer incidents should also be reported on this number.

Comments

Approval granted for a 100mm combined and a 100mm surface water connection to an existing 225mm combined sewer via a new manhole in Gathurst Street.
The new manhole must be constructed in line with United Utilities standard details.

Development Support Technician	**Phil Harper**
Contact number	**07768301804**
Date	**17/02/2021**

4.0 Construction Photographs

Below are photographs taken during construction of the drainage on the site.





Sutcliffe



Sutcliffe



Sutcliffe



Below are photographs of the constructed drainage manholes.



Sutcliffe



Sutcliffe



Sutcliffe