DO NOT SCALE IF IN DOUBT ASK ALL DIMENSIONS IN MM UNLESS OTHERWISE STATED

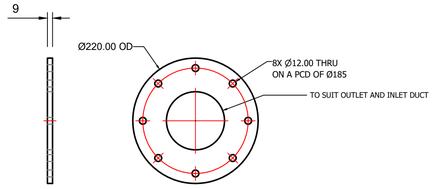

CUCARB
INLET AND OUTLET
FLANGE DETAIL
SCALE: 1:5

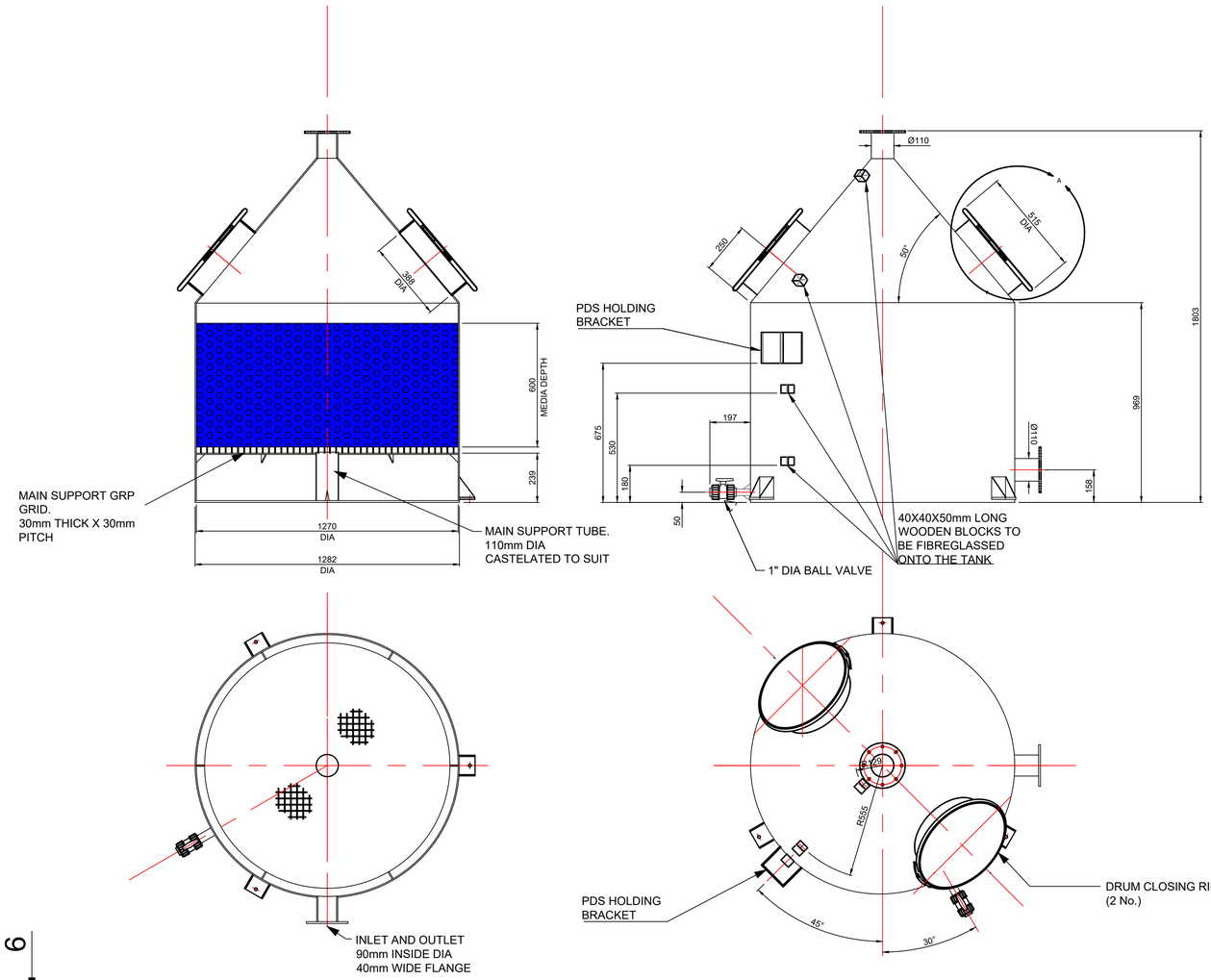

SECTIONAL PLAN

PLAN

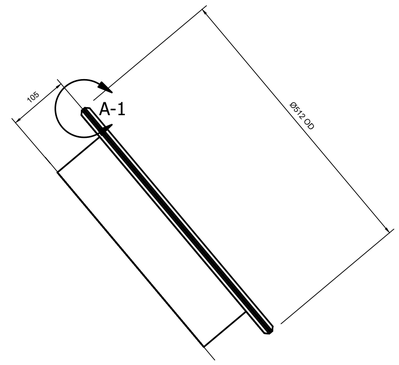

SECTION-A
FILLING PORT LID DIMENSIONS

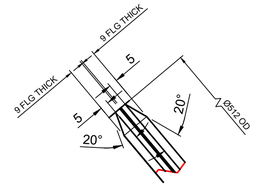

SECTION- A-1

HOLDING DOWN LUGS

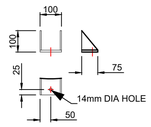

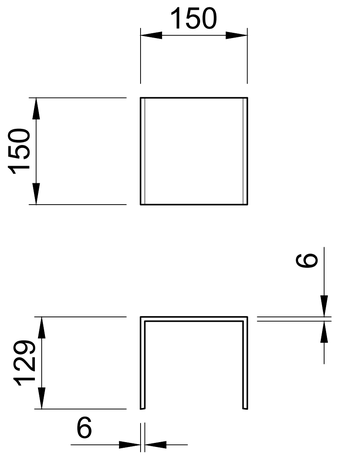

PDS HOLDING BRACKET
SCALE : 1:4

DEEP BED CARBON FILTER
MATERIAL :- CELMAR/GRP
VESSEL COLOUR :- BS4800 18-B-17 SILVER HAZE
DUCTING COLOUR :- BS4800 18-B-17 SILVER HAZE

ALL FASTNERS AND FIXINGS TO BE A2 STAINLESS STEEL.

FABRICATOR TO SUPPLY ALL FASTENERS AND FIXINGS.

REV	DRAWN	DATE	CHECKED	DATE	APPROVED	DATE	DESCRIPTION
A	TD	11/05/20	MCW	11/05/20	MW	11/05/20	AMENDED TO SUPPLIERS COMMENTS
B	TD	13/05/20	MCW	13/05/20	MW	13/05/20	CHAMFER ANGLE AMENDED
C	TD	14/05/20	MCW	14/05/20	MW	14/05/20	PDS BRACKET ADDED

OSIL
Air Pollution Control +

ODOUR SERVICES LTD
UNIT 14 MORSTON COURT
KINGSWOOD
LAKESIDE
CANNOCK
STAFFs
WS11 8JB
TEL:– 01543 506855
EMAIL:– info@osiltd.com

This drawing is property of Odour Services International LTD and is loaned subjet to the return upon the demand on the condition that it is not to be reproduced, copied or otherwise disposed of and is not to be used to furnish any information for the making of drawings, prints or apparauts or parts thereof except where otherwise provided for by specific agreement with Odour Services International LTD. ©

CLIENT	ICELAND MANUFACTURING
CONTRACT No.	C01661
CONTRACT TITLE	ICELAND MANUFACTURING
TITLE	DETAILED ARRANGEMENT OF 1.27m DIA. x 1200 HIGH DEEP BED CUCARB FILTER.
DRAWN	MJEW
DATE	30.03.2020
CHECKED	MJEW
DATE	30.03.2020
APPROVED	MJEW
DATE	30.03.2020
SCALE	SCALE
DRAWING No.	C1661-001
REV	C

AI