cycle-works

The Cycle Storage Specialists

Product Guide

Josta 2-tier

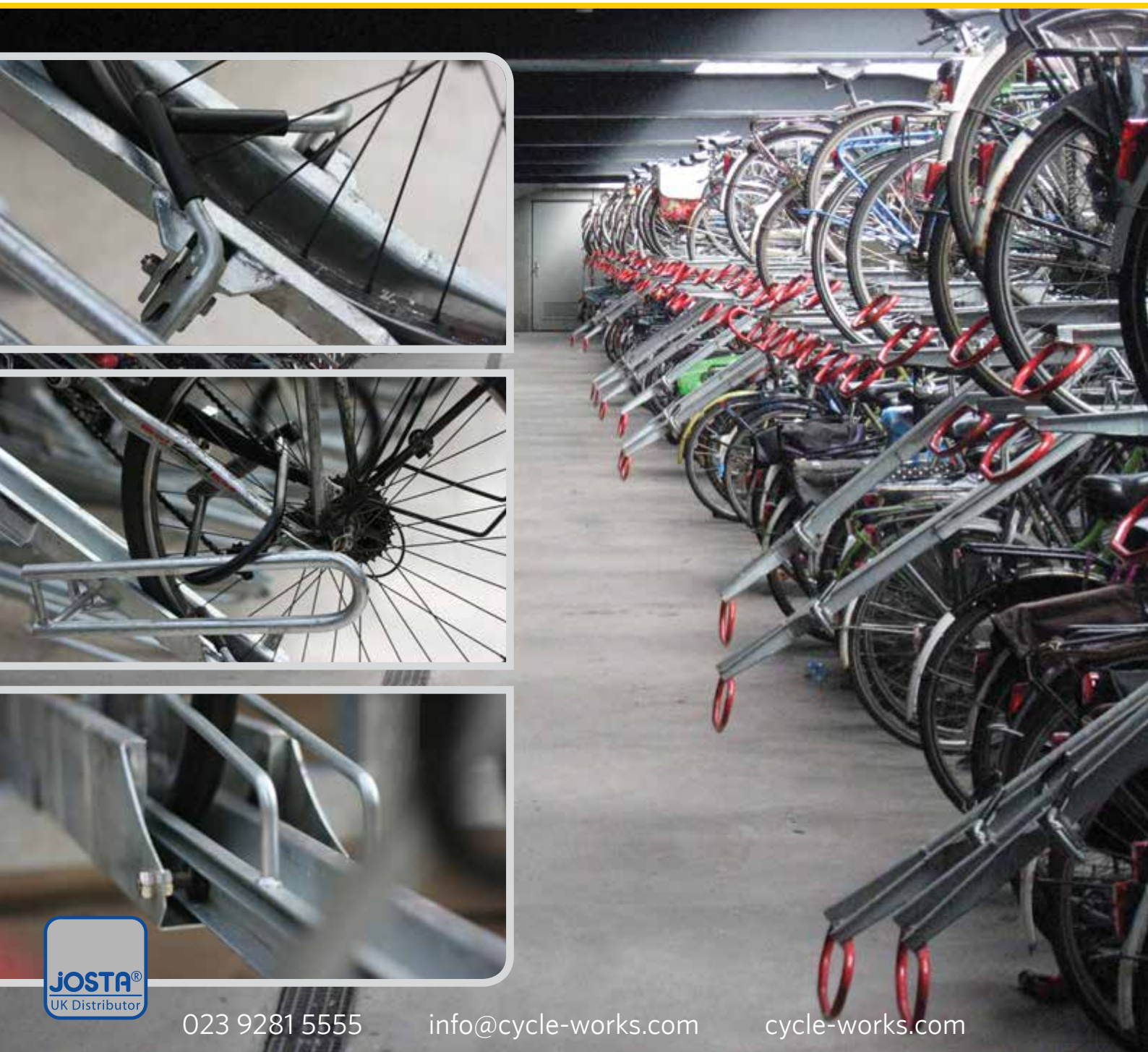

JOSTA® UK Distributor

023 9281 5555 info@cycle-works.com cycle-works.com

cycle-works

The Cycle Storage Specialists

Josta® 2-tier High Capacity Racks

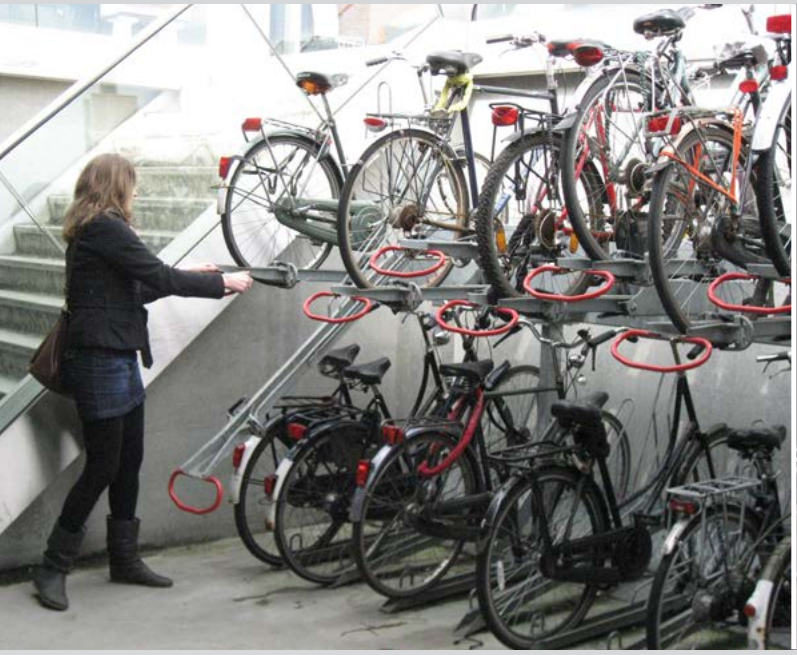

The market leaders in high capacity bicycle racks, offering space efficient and cost-effective cycle storage.

- Double the number of bicycle storage spaces
- Easy and safe to use - with a proven track record in the UK, Europe, Australia and the USA
- Space-efficient
- Flexible and adaptable
- Neat and organised
- Individual racking – one bike per space
- Low maintenance
- Patented gripping system holds bike securely
- Maximises cycle parking spaces and allows more car parking (if required) or creates space for other uses
- The racks can be used to help demonstrate compliance with BREEAM and achieve a high BREEAM rating
- Framework can be coloured in any standard RAL colour (optional extra)

There are many unique features of the Josta® racks. This includes the low, easy to use handles, the clever, patented way the bikes are held on the racks and the general ease of use.

They are also designed for a long, tough life of constant heavy use, with low maintenance. However, the most important factor is always safety, and the Josta® racks are very safe to use. This is a particularly important feature for heavy bikes.

Liverpool Street Station, London

London Liverpool Street Station more than doubled its awkward bike parking in a limited space. By using the Josta® 2-tier capacity was increased from 80 to 189 bike spaces.

Cycle-Works
8-9 Rodney Road
Portsmouth
Hampshire
PO4 8BF

t 02392 815 555
f 02392 815 544
e info@cycle-works.com
w cycle-works.com

Cycle-Works Ltd
Registered in England 3268339

BUILDER'S PROFILE

Link-up Registered Link-up ID: 26039

riba product selector

ESI.info

JOSTA® UK Distributor

cycle-works

The Cycle Storage Specialists

Josta® 2-tier High Capacity Racks

Innovative unique features

Wheel Gripping Mechanism

A special, patented gripping mechanism ensures that the bike cannot roll back and injure the user. As the bike is pushed into the rack, the mechanism gently clamps around the front wheel. As as you push the bike up the channel, the front wheel is released and the back wheel is clamped securely into place.

The mechanism is very well designed and fabricated, so that if an extended rack containing a bike should be accidentally dropped, the bike will be securely held in place, causing no harm to user or bike. The Josta® 2-tier rack is the only 2-tier system to offer this type of safety feature.

Movable Security Bar

The Josta® 2-tier rack comes with a movable bar as standard. This security feature is positioned at the rear of the rack in the optimum location to securely lock the rear wheel and bike frame.

When the rack is not is use, the security bar is lowered down, lying parallel to the rack. It is the feature that allows the bike to be easily pushed up the channel without any obstructions for the pedals.

Pivoting Channel

The central channel that holds the bike is built around an extending, pivoting channel. It is this feature that utilises a 'sweet spot' for pivoting, allowing a full rack to be very easily lifted up and pushed back into place.

The strong box section, galvanised mild steel construction and precision engineering all ensure that this product has an extremely long and low maintenance life.

Code for Sustainable Homes

All our lockers, shelters and racks they can be used to help contribute towards gaining your 2 ENE8 Cycle Storage Credits when used in an appropriate situation, under the Code for Sustainable Homes.

more info

BREEAM

All our lockers, shelters and racks they can be used to help demonstrate compliance with **BREEAM** and achieve a high **BREEAM** rating when used in an appropriate situation.

more info

Gas Assisted

Josta® have developed a new 'gas cylinder' model that makes lifting and lowering the racks even easier. The strong gas strut is built into the middle of the top rack, in a unique design. This means there are no moving parts to catch fingers and the whole structure is modern and stylish. 2700mm headroom is needed for G.A. racks.

Cycle-works and its products and services are not affiliated, endorsed or certified by BRE Global or its affiliates. All rights reserved.

Cycle-Works
8-9 Rodney Road
Portsmouth
Hampshire
PO4 8BF

t 02392 815 555
f 02392 815 544
e info@cycle-works.com
w cycle-works.com

Cycle-Works Ltd
Registered in England 3268339

BUILDER'S PROFILE
Link-up Registered Link-up ID: 26039
riba product selector
ESI.info
JOSTA® UK Distributor

cycle-works

The Cycle Storage Specialists

Josta® 2-tier High Capacity Racks

The Josta® 2-tier rack is a high capacity double decker bicycle rack.

Josta® is the market leader for high capacity racking systems. Their racks are popular across Europe, the USA and Australia. Many bike stations in Germany, Holland and the US also specify the Josta® rack as standard. Cycle-Works are the UK's exclusive distributor of the Josta® 2-tier rack system and have extensive experience of providing cycle parking including shelters, compounds, racks and bike lockers.

Josta® 2-tier sites range from small open access installations of less than 80 bike spaces (e.g. Surbiton station) to large manned cycle parks of 7000 (e.g. Leiden, NL). They are also increasingly used in the basements of new office blocks and apartments (e.g. The prestigious Foster's Albion Riverside development in Battersea).

Why the Josta® rack is the market leader in high capacity bike parking

This space efficient racking system stores one bike directly above the other. It therefore increases the amount of bicycles parked (or reduces the size of the site) by up to 50%.

The rack is custom made for specific sites to maximize the cycle parking capacity, and can be used in conjunction with other systems.

A special patented gripping mechanism ensures that the bike cannot roll back and injure the user. We find the top racks are usually filled first as users like to store their bike 'out of harm's way'. It is also easier to lock the bike when on the top rack. This usually leaves enough space in the bottom row for users who do not wish to use the top row.

Layout and Space Requirements

This racking system is designed to fit your exact space. It can be used in conjunction with our other cycle parking systems to give the maximum capacity for your site.

Mounting/Installation

A level concrete base is usually required (not screed). This racking system is then installed by our team of experienced installers. Special supports for non-concrete sites with strong level surfaces can be supplied for a small additional charge.

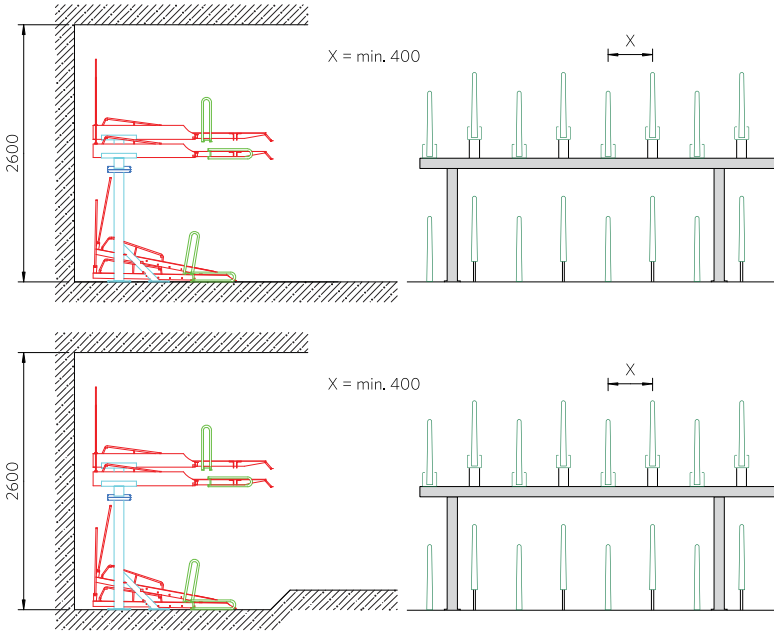

Site Planning

We are happy to give advice or assist you with your site planning. For this, please let us have your draft site plan (DWG or PDF format), clearly marked with all relevant dimensions, obstacles and access ways. Please see the next page for a guide on designing a site yourself.

Please contact us to obtain DWG files of the product layout.

Locking mechanisms and options

A security bar allows the cyclist to lock the bike frame and wheels with their own chain or D-lock. The front wheel and frame can also be locked easily.

Delivery

The current lead time is 6-8 weeks, but larger projects can require more than this. It is really beneficial if Cycle-Works are involved in the site planning as soon as possible.

Material options

These racks are usually galvanised with a red handle on the top racks, the framework can be powder coated in any standard RAL colour.

Cycle-Works
8-9 Rodney Road
Portsmouth
Hampshire
PO4 8BF

t 02392 815 555
f 02392 815 544
e info@cycle-works.com
w cycle-works.com

Cycle-Works Ltd
Registered in England 3268339

BUILDER'S PROFILE
Link-up Registered Link-up ID: 26039
riba product selector
ESI.info
JOSTA® UK Distributor

cycle-works

The Cycle Storage Specialists

Josta® 2-tier High Capacity Racks

Site Requirements

- A minimum of 2600mm of clear headroom is required for maximum capacity.
- Leave 300mm to any adjoining side wall to give space for the handlebars.
- The racks are then spaced at a minimum of 400mm centres. We have found 450mm to be a good spacing, giving capacity as well as ensuring ease of use.
- Please allow 2000mm for the rack itself and another 2000mm in front for loading the bike. It is possible to allow 1700mm for loading but we strongly recommend at least 2000mm for optimal operation.
- The racks can also be installed from a central spine. For this option, please leave 2000mm for access on both sides. The 2-sided unit is then 3100m wide.
- Racks can also be installed at a 45 or 55 degree angle to minimise space.

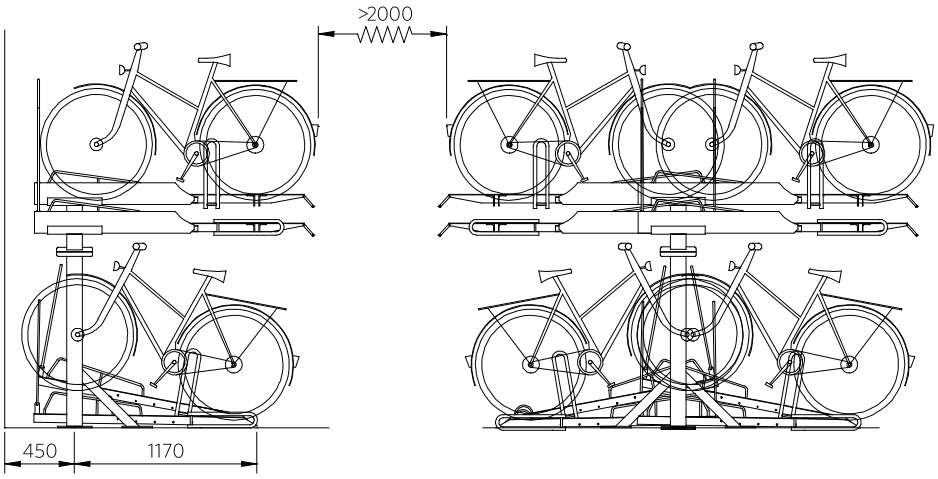

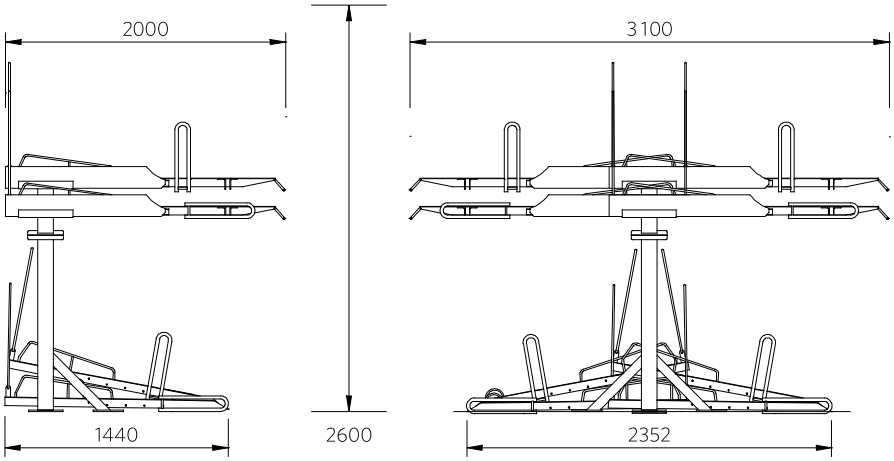

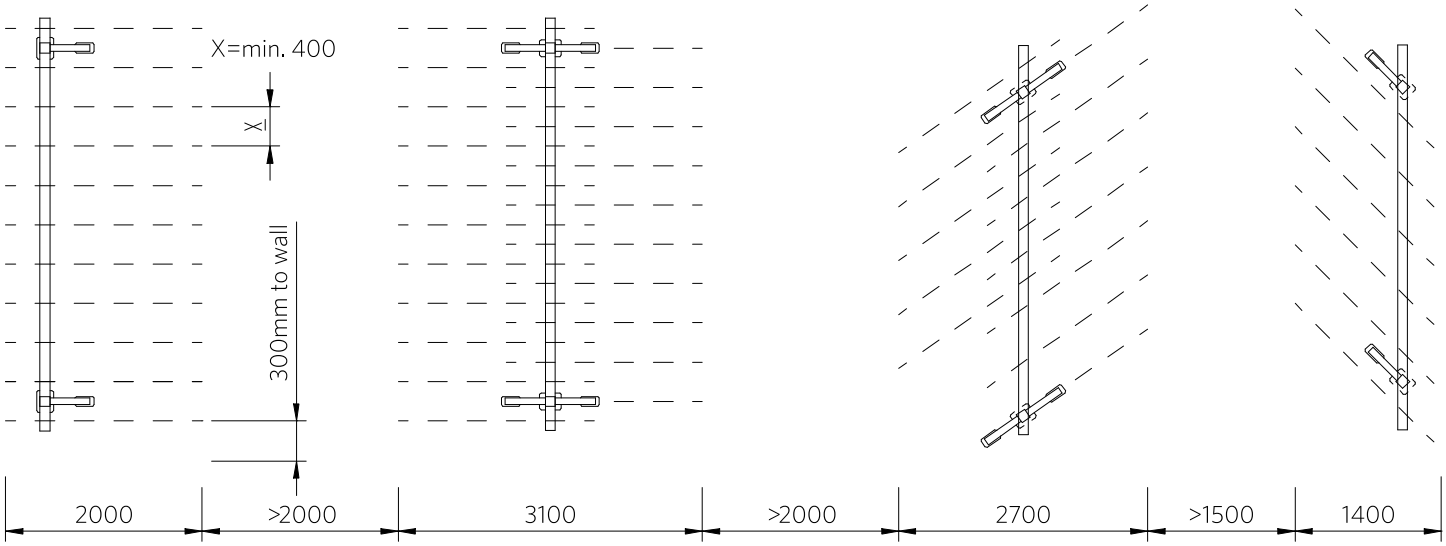

Cycle-Works
8-9 Rodney Road
Portsmouth
Hampshire
PO4 8BF

t 02392 815 555
f 02392 815 544
e info@cycle-works.com
w cycle-works.com

Cycle-Works Ltd
Registered in England 3268339

BUILDER'S PROFILE

Link-up Registered Link-up ID: 26039

riba product selector

ESI.info

JOSTA® UK Distributor

cycle-works

The Cycle Storage Specialists

Josta® 2-tier High Capacity Racks

Store and retrieve your bike in four easy steps

Loading your bike on to the upper racks

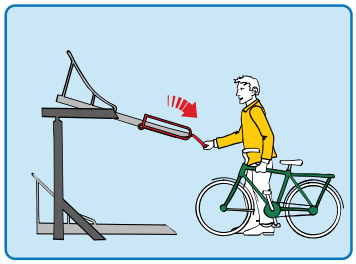

1. Pull down the upper rack.

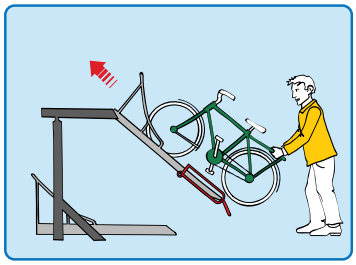

2. Lift the front wheel onto the lowered rack and push forwards.

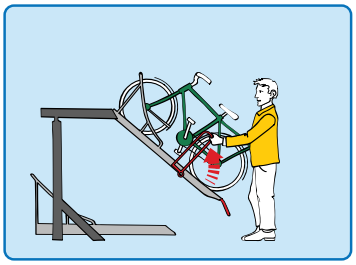

3. Raise the locking bar and lock the bike to it.

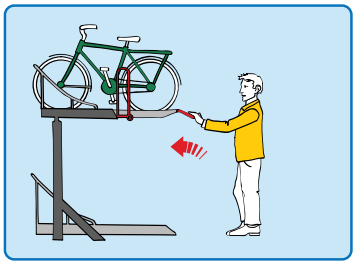

4. Lift the rack back into the horizontal position

Unloading your bike from the upper racks

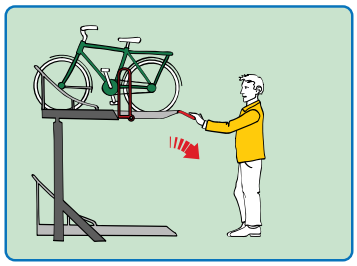

1. Pull down the upper rack, the bike will lower slowly towards you

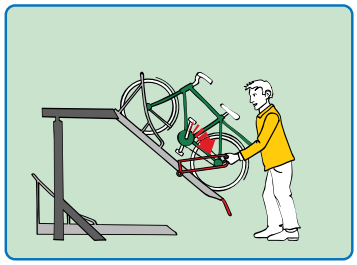

2. Unlock the bike and lower the locking bar

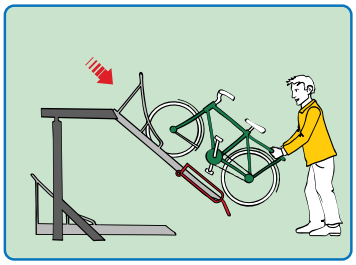

3. Hold the bike and guide backwards towards you

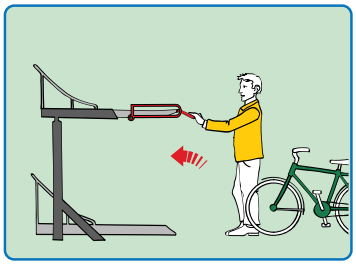

4. Return the upper rack to its original position

Shelters

Cycle-Works can also provide a range of quality shelters and compounds to complement the Josta® 2-tier rack. These can be customised as required.

Shelter height

2700mm recommended
2600mm minimum

Higher Kennet, East Croydon train station

Higher Solent, Euston train station

Medway Shelter, St George's Hospital

Medway Compound, St George's Hospital

Berlin Lockable Compound

Cycle-Works
8-9 Rodney Road
Portsmouth
Hampshire
PO4 8BF

t 02392 815 555
f 02392 815 544
e info@cycle-works.com
w cycle-works.com

Cycle-Works Ltd
Registered in England 3268339

BUILDER'S PROFILE

Link-up Registered Link-up ID: 26039

riba product selector

ESI.info

JOSTA® UK Distributor

cycle-works

The Cycle Storage Specialists

cycle-works

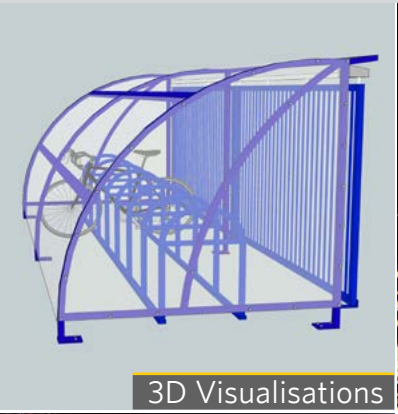
3D Visualisations

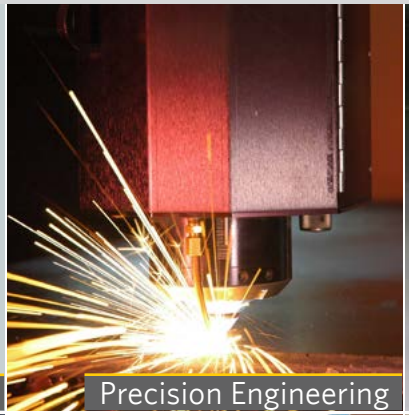
Precision Engineering

Powder Coating

Professional Installation

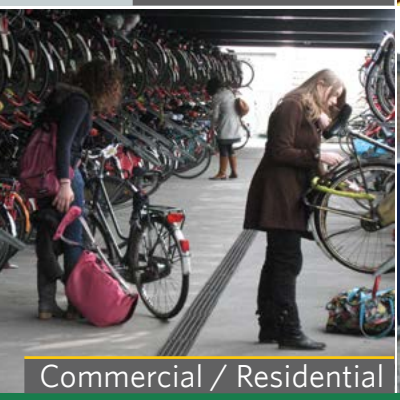
Commercial / Residential

Healthcare

Rail

Education

About Cycle-Works

Cycling is our passion. We believe that cycling is good for people, good for society and good for the environment. This belief underpins everything we do. We believe that the provision of quality facilities will increase the use and acceptance of the bicycle.

All our employees and associates cycle regularly in diverse disciplines such as commuting, touring and long distance audax rides. We are active in both local and national cycle campaigning.

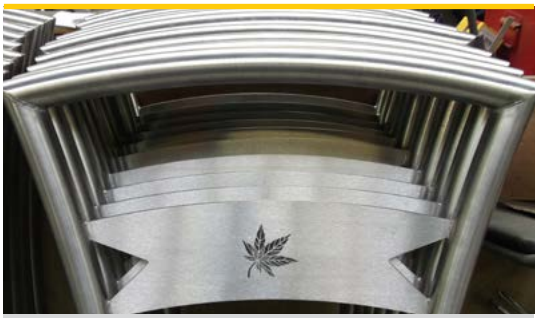

Our Products

- Individual bicycle lockers
- High capacity 2-tier racks
- Open access and lockable shelters
- Wide range of individual racks
- Vertical and horizontal racks

Our Services

- Initial site visits
- Advice on product selection
- Consultation on your plans
- Full delivery and installation
- Aftercare and maintenance

SOLD SECURE 2013 SECURITY CABINETS BRONZE

BUILDER'S PROFILE

ESI.info

riba product selector

JOSTA® UK Distributor

Link-up Registered Link-up ID: 26039

cycle-works

The Cycle Storage Specialists

cycle-works.com • 02392 815 555