Morgan Sindall

Hammerstone Road, Manchester

MEP Services Performance Specification

Last Updated 30/04/2021

Ref: HRD-HAN-ZZ-XX-SP-N-0001

Revision C1

Hannan Associates
MEP Design Solutions

Document Control

Document Authority

Prepared by	Colin Burns / David Green
Date	31/01/2019
Checked by	John Walker
Date	31/01/2019
Approved by	Philippa Spivey
Date	31/01/2019

Document History

Issue	Issue Date	Status
T1	31/01/2019	Tender
T2	07/01/2021	Revised Tender Issue
C1	30/04/2021	Contract Issue

Volume 1 – Scope of Works

1. Outline Project Information
2. Tender Information
3. Roles & Responsibilities

Volume 2 – Particular Requirements

1. Standards & Performance
2. Utility Services
3. MEP Services Plant Space & Distribution Strategy
4. Mechanical Services Installation

   Appendices

   Appendix 1 - Approved Manufacturers, Suppliers & Installers

   Appendix 2 - Mechanical Services Schedules
5. Electrical Services Installation

   Appendices

   Appendix 1 - Approved Manufacturers & Suppliers

   Appendix 2 - Approved System Installers

   Appendix 3 - Electrical Equipment Connection Schedules

   Appendix 4 - Proposed Luminaire Schedules

   Appendix 5 – ICT Responsibilities Interface Matrix

   Appendix 6 – Lighting Control Methodology and Equipment Schedules

   Appendix 7 – Security System Equipment Schedules

   Appendix 8 – Fire Alarm & Aspirating System

   Appendix 9 – EVC Equipment Staff Provision

   Appendix 10 – Accessible Toilet Alarm Equipment Schedule

   Appendix 11 – Induction Loop System

   Appendix 12 – Access Control & intercom System

   Appendix 13 – Intruder Alarm System

Volume 3 – General Requirements

1. General Handover
2. General Maintenance

Volume 4 - Tender Summary Sheets

1. Utility Services Works
2. Mechanical Services Installation
3. Electrical Services Installation

Volume 5 – Reports

1. Existing Utility Searches Report
2. Part L2A Compliance Report

Volume 6 – Quotations

1. Electricity Supply Quotation – ENWL
2. Gas Supply Quotation (To follow)
3. Water Supply Quotation (To follow)
4. Utilities Tracker
5. L.V. Switchboard Quotation – Schneider Electric (To follow)

Volume 7 – Drawings (Please Refer to Separate Package Information)

1. Mechanical Drawings
2. Electrical Drawings
3. Plant Space Drawings

Volume 8 – Supplementary Information

1. Health & Safety - Hazard Risk Register
2. EVC Bin Wagon Design Drawings

Volume 1 – Scope of Works

1. Outline Project Information
2. Tender Information
3. Roles & Responsibilities

1.0 Outline Project Information

1.1 Introduction

The purpose of this Particular Specification and the accompanying design information is to define the MEP services requirements for the Stage 4a Technical Design and construction Information.

The MEP services shall fully comply with the requirements of this Stage 4a MEP services particular specification, the project Development Brief and the Employers Requirements.

Hannan Associates have already completed and issued the initial stage 2 concept design, Stage 3 Developed Design (Spatial Co-ordination) and a subsequent revised Stage 3 submission in line with revised scheme layouts.

This package shall form the basis of Stage 4a tender submission with Stage 4b – 6 completed by the Nominated D&B contractor.

1.2 Project Description

The project consists of the refurbishment of the existing Manchester City Council 10,000sq.m Waste Disposal and Maintenance Depot located on Hammerstone Road Gorton, Manchester M50 3YN.

The existing warehouse is a single storey open plan building which shall be remodelled and refurbished to provide new multi-tenanted building between MCC, Biffa and smaller sublet units.

The MEP services installations shall be designed to maximise the flexibility of the open plan office space.

Demolition of the existing Coca Cola building and ancillary buildings and disconnection of associated services / installation.

The overall project also includes the rationalisation and amalgamation of services of other Manchester City Council depots identified below:

- Hooper Street./ Rondin Road located in Ardwick
- Grimshaw Lane located in Miles Platting and Newton Heath

The full extent of the MCC services and operations to be relocated to Hammerstone road site may still develop within the overall project but the following is to the best of our knowledge all current known requirements.

The new building and external areas comprise:

Main Building

- MCC – Office Facilities
- MCC Storage
- Sublet No1
- Sublet No2 / MCC Storage
- Biffa Offices
- Biffa Workshop
- Bin Store / Plating Shed

External Site / Ancillary Buildings

- Open Area Car Park
- Security Gatehouse
- Winter Maintenance Compound incorporating - Gritter Garage / Grit and Salt Storage
- Wash Down Facilities

1.3 Strip Out Works / Temporary Connections

Existing Mechanical Services Installation

The complete Mechanical Services installations shall be stripped out and no redundant equipment, ductwork or pipework shall be left installed, other than where required to keep temporary work areas operational.

Strip out works are to be programmed in with the refurbishment works, services installations shall be kept working in areas of the site in use by the building users.

Temporary supplies shall be installed to areas/items of equipment identified as requiring continued operation to ensure Mechanical services are maintained to building users throughout the works.

It is currently proposed that the existing 2" gas supply located within the bin store area of the existing workshop shall be retained and extended to provide temporary heating to the existing Plating Shed area whilst the new workshop facilities are constructed.

Electrical Services Installation

The complete electrical Services installations shall be stripped out no redundant equipment/wiring is to be left installed.

Strip out works shall be programmed in with the refurbishment works, electrical supplies/installations are to be kept working in areas of the site in use by the building users.

Temporary supplies shall be installed to areas/items of equipment identified as requiring continued operation to ensure electrical services are maintained to building users throughout the works.

Temporary Mechanical & Electrical Systems

During the strip out of the existing distribution infrastructure as highlighted above there are certain areas of the building that will require continued operation.

As such prior to full strip out of the redundant installations a new temporary/ potential permanent LV Power Distribution systems, water supplies and gas shall be installed to ensure certain tenant Operations can continue during the intended works and shall include the following:-

Temporary Biffa Workshop (MCC bin store)

New distribution infrastructure and final circuit cabling shall be provided for the temp relocation of the Biffa workshop into the MCC bin store rather than trying to re-use the existing distribution equipment and wiring.

After consideration it has been determined it shall be more cost effective and realistic to set up a new installation rather than try to retain and re-use a poor and questionable existing installation.

The following shall be provided as a general allowance at this stage:-

- Main Isolation switch

  (New connection cabling to be provided albeit with ENWL approval it may be possible to re-direct existing supply cabling and re-energise into new isolator to provide continued supply to Biffa workshop operations. Currently under review by Ameon Utilities.

- Main Panelboard within LV swicthroom
- Main Section Board (Within Biffa Workshop)
- Distribution Boards (Within Biffa workshop and MCC Bin Store area)
- Sub-main distribution cabling
- Re-wire of ALL individual final circuits to new Biffa workshop equipment / installation.

These temporary distribution boards shall be located adjacent to the areas requiring continued operation but supplied directly from the main supply that current supplies the building within the LV Switch room at the South end of the building.

It is currently intended that the new containment route shall run down the rear wall of the warehouse building from LV switchroom to Biffa workshop area and contain the new sub-main cable to allow workshop facilities to continue during the strip out works to other areas.

The existing temporary gas fired radiant heating system is to be retained/modified where required and re-used to provide heating to the plating shed whilst Biffa occupy this area.

The existing vehicle fume extract system is to be retained/modified where required and re-used to provide vehicle fume extract to the plating shed whilst Biffa occupy this area.

The existing compressed air system is to be retained/modified where required and re-used to provide compressed air to the plating shed whilst Biffa occupy this area. The existing air compressors currently located within the Biffa Workshop are to be relocated and used within the Plating Shed.

The existing domestic services are to be retained/modified where required and re-used to provide domestic services to the plating shed whilst Biffa occupy this area. A new temporary supply shall be provided to this area.

The design for these temporary works shall be progressed in more detail at the next stage once the full list of areas and associated equipment requiring continued operation is fully understood and agreed. A&B currently undertaking full survey of existing services to advise on suitability of retaining and re-using.

External Vehicle Wash Down Facilities

The existing domestic services serving the existing external vehicle wash down facilities are to be retained/modified where required and re-used to keep these facilities operational. A new temporary supply shall be provided to this area.

Construction Site Cabins

These temporary supplies / feeder pillar / distribution boards shall be located adjacent to the building / area requiring supply during the construction works but installed to allow these supplies to be retained and re-used in the final scheme where possible.

The design for these temporary works shall be progressed in more detail at the next stage once the full list of areas and associated requirements have been confirmed.

This relates to Construction cabins intended where the future Gritter Garage / Welfare building is intended to be positioned and the expected site cabins within central areas of the car park.

For all ducting and below ground cabling provisions for both power supplies and car park lighting columns refer to Stage 4 design layouts.

Early site works shall consider these routes in line with proposed phasing of the external construction works and shall incorporate any requirements for construction site set up to avoid duplication of groundworks by including where possible all future requirements.

Bin Wagon ELV Installation

When the project begins there shall be a requirement to relocate recently installed MCC Bin Wagon ELV charging installation into the central car park area. The current location albeit recently installed shall be required to form the Winter Maintenance installation.

It is not clear who shall carry out this relocation works but allowance should be included to ensure this is not overlooked. Final details and requirements shall be agreed at Stage 4b.

Biffa Workshop

The existing gas fired radiant heating system is to be retained/modified where required and re-used to provide heating to the Biffa Workshop.

The design for these temporary works shall be progressed in more detail at the next stage once the full list of areas and associated equipment requiring continued operation is fully understood and agreed. A&B currently undertaking full survey of existing services to advise on suitability of retaining and re-using.

1.4 Outline of Key MEP Systems

The works include but are not limited to the following systems:-

1.4.1 Utility Services

- New Substation / Transformer
- New LV Supply Distribution Equipment both for internal and external services Installations
- New Gas Supplies
- New Domestic Water Supplies
- New Incoming Telecoms (BT Openreach, Virgin Media & Alternative Telecoms) ducted Infrastructure

  (To be confirmed and co-ordinated with MCC ICT Infrastructure Network Team)
- Co-ordination / Disconnections of existing Coca-Cola utility connections in line with project programme

1.4.2 Mechanical Services

- VRF Heating & Comfort Cooling Systems
- DX Split Systems
- Server Room Split System Cooling
- Specialist Lab Room Air Conditioning Systems c/w Humidity Control
- Gas Fired Radiant Heating System
- Overdoor Air Curtains
- Electric heating to ancillary areas

- General Supply & Extract Ventilation Systems
- Local Heat Recovery Ventilation Systems
- Dirty Extract Ventilation Systems
- Vehicle Fume Extract System
- Domestic Hot & Cold Water Services
- Compressed Air Systems
- Gas Service
- Automatic Controls System
- Fire Safety Systems
- Above Ground Drainage System
- Rainwater Drainage
- Water Treatment
- Sanitaryware Installation
- Thermal Insulation
- Testing & Commissioning
- Seasonal Commissioning

1.4.3 Electrical Services Installation

- Power Distribution System
- Energy Metering Systems
- Earthing and Bonding
- Lightning Protection System
- Small Power Installations
- Lighting Installations
- Life Safety Systems
- Disability Assistance Systems
- Security Systems
- Fire Detection and Alarm System
- Structured Wiring System
- Cabling & Containment Systems
- Car Park Lighting & Power

2.0 Tender Information

2.1 Basis of Tender

The Contractor is required to prepare his tender in strict accordance with the Employer's Requirements documentation.

All work must be in compliance with this MEP Stage 4 Particular Specification and the associated technical design drawings.

2.2 Tender Drawings

Refer to the MEP services drawing registers for full details of Hannan Associates technical design drawings.

The Contractor shall note that the technical design drawings provided with the tender package are intended to convey the design intent, typical system arrangements and particular requirements only.

Note it is the contractor's responsibility to ensure that the design meets the particular requirements of this specification and associated tender documents.

No additional cost shall be accepted associated with the Contractor use of the drawings provided.

2.3 Equipment Schedules

Where equipment schedules have been provided these are issued to convey the base level specification and the Clients particular requirements relating to plant and equipment ranges.

Final selections shall be carried out by the Contractor as part of the Stage 4b Technical design.

Note it is the contractors' responsibility to ensure that all plant and equipment selections meet the particular requirements of this specification and associated tender documents.

No additional cost shall be accepted associated with the Contractors use of the schedules provided.

2.4 Approved Manufactures & Suppliers

The tender price must be based on the use of products and equipment sourced from the companies named on the 'Approved Manufacturers & Suppliers' list, the equipment selections defined within this specification and the use of companies named on the 'Specialist System Installers' list.

2.5 Supporting Information

- Architectural Drawings & Specification – Fletcher Rae Architects
- Structural Tender Drawings & Specification – Curtins
- Fire Engineering Report – Omega
- Acoustic Report - Ramboll
- Existing Utility Services Report – Hannan Associates
- Part L2A Report – Hannan Associates

3.0 Roles & Responsibilities

3.1 Outline Responsibilities

The Contractor shall refer to the Employers Requirements documentation and the hierarchy of contract documents to fully understand his roles and responsibilities under this contact.

The following is a general summary of roles and responsibilities issued for guidance only.

3.2 General Overview

Base Roles;

Building Services Consultant	Particular design, retained by the Client to monitor the Contractors design and installation works
Contractor	Technical and detail design, supply, install, test, commission and handover
Tender information	BSRIA Stage 4a

Base Responsibilities;

Building Services Consultant	Production of tender documents for pricing
Contractor	Overall design responsibility to Client, continuation of the project to issue of the final certificate of making good defects 12-month post practical completion.

3.3 Contractors Duties

The contractors duties shall include;

- Provision of fully functioning MEP installations.
- Full design of the MEP services installations.
- Management and co-ordination of the works.
- Supply of all plant, equipment and materials.
- Supply of all labour, skilled and non-skilled.
- Testing and commissioning the installations.
- Provision of co-ordinated working drawings.
- Provision of detailed builderswork requirements.
- Provision of O&M Manuals.
- Provision of as fitted information and drawings.
- System demonstrations and witnessing to the client team.
- System end user demonstrations and training.
- Provision of first 12-month services and maintenance (cost option).
- Completion of seasonal commissioning during the first 12 months.
- Rectification of any defects during the first 12-months.

3.4 Contractor Information

The Contractor shall be responsible for providing the following;

- Detailed design information.
- Detailed design calculations.
- Builders work information.
- Co-ordinated working drawings.
- Installation drawings.
- Manufacturer's drawings.
- On site builders work details.
- Testing and commissioning plan and programme.
- Witnessing and demonstration programme.
- End user demonstration and training program.
- System commissioning certification.
- As-fitted information.
- Provide a Building Log book.
- Provide a Building User Guide.
- Provide Part L2A Calculations.
- Provide EPC certificates.

3.5 Design & Construction Information

The Contractor shall submit complete and comprehensive design and calculations file that fully demonstrates compliance with the Contract documentation.

The file shall include the principal aspects of all the systems proposed for the installation. The design package shall present the information in a clear, concise and logical manner and be complete with all input data, results and reference information necessary to support the design proposals.

A schedule and programme of information production shall be issued and agreed at the earliest opportunity.

Detailed design drawings, calculations and specifications shall be submitted to the Employer for comment prior to the completion of the working drawings to an agreed point in the programme in accordance with the Employers Requirements and the Building Contract.

1no paper copy of design drawings, 1no paper copies of calculations and detailed specifications shall be submitted to the Consultant for comment prior to issue for construction.

The engineer shall have 10-working days in which to review the design information and return comments.

All working drawings shall be issued for Construction at least four weeks prior to being required for work on site. No work shall be carried out on site without an approved working drawing in place.

As a minimum the following design information shall be provided:-

- Utility load assessments
- Main & sub main cable sizing calculations and results (Amtech)
- Final circuit cable calculations and results (Amtech)
- Lightning protection system risk assessment and system selection

- Internal and external lighting calculations / plots for all areas (Relux)
- Emergency lighting plots for all areas (Relux)
- Fire detection and alarm system cause and affect
- Heat losses
- Heat gains and cooling loads
- Domestic hot & cold water loads
- Sizing of all distribution systems
- Heat source sizing
- Cooling Plant sizing
- Fan sizing
- Pump sizing
- Diffuser & grille selections & particular data
- Air system acoustic/silencer selection
- Plant selection criteria
- Ventilation Air volumes
- Above ground drainage
- Building Regulations compliance
- Part L2a & EPC calculations
- Technical submissions for all plant and equipment.

It may be necessary during the course of the contract for the Contractor to produce additional drawings and information to enhance that already included as part of the drawings.

The Contractor shall be deemed to have made full allowance for these in their contract.

All drawings shall be produced in AutoCAD and calculations using Amtech.

3.6 Co-ordinated Working Drawings

The Contractor shall provide working drawings for the whole installations covered by this contract. The drawings shall be prepared using the agreed version of REVIT and the Contractor shall provide a model file, 1no paper copy and digital copies of each drawing and any subsequent revision.

Working drawings shall include:-

- General dimensioned layout drawings of the complete works.
- Detailed layouts showing the location of all plant and equipment including service routes, switch rooms and plant rooms.
- Key area sectional layouts in risers, floor and ceiling voids.
- Assembly drawings of all factory built equipment and site built assemblies.
- System diagrams and circuit wiring diagrams for all installations and equipment.

The Contractor shall also prepare detailed dimensioned layout drawings showing final connections to equipment.

The Contractor shall ensure that adequate space is provided for servicing and maintenance of all equipment and indicate this on the drawings.

If during the progress of the contract, modifications are required to be made to the works, the Contractor shall submit revised drawings the modifications.

The Contractor shall be responsible for any discrepancies, errors or omissions in the above mentioned drawings, whether these drawings have been commented on by the Consultant or not.

Comments given by the Consultant to any drawing shall in no way relieve the Contractor from his liability to complete the works in accordance with the tender specification and drawings or exonerate him from any of his guarantee.

3.7 Manufacturers Drawings

The Contractor shall provide to the Consultant for comment two copies of manufacturing construction drawings giving all information, including dimensioned details of all plant equipment and manufactured components prior to commencing manufacture.

Manufacture of relevant items of plant and equipment shall not commence until the Consultants comments have been actioned on the relevant manufacturing drawing.

3.8 Builderswork Drawings

The Contractor shall provide to the Consultant and contract administrator for comment two copies of fully dimensioned drawings to an approved scale, of builderswork requirements in connection with this contract.

Drawings shall show detail of plinths, holes, bases, tray and trunking supports, all external ducts and duct routes etc. including all infrastructure ductwork and builderswork details.

The Contractor shall provide to the Consultant full particulars of static and dynamic loading including moments, and dimensions and positions of foundations and plinths, and/or fixings necessary for the support and accommodation of all equipment to be supplied under this contract, so that adequate provision may be made.

Builderswork drawings shall be fully dimensioned showing location of holding down bolts, details of anti-vibration mountings and secondary support steelwork.

3.9 Construction Drawings

Once the design calculations, working, manufacturers and builderswork drawings have been commented upon and finalised, they shall be issued marked as construction drawing and circulated to all relevant parties. The Contractor shall include for 3no paper and one digital copy of drawings.

3.10 Co-ordination and Integration

The Contractor shall ensure that the programme of installation of the services in relation to each other is co-ordinated and carefully planned before any installation work commences including liaison with other sub-Contractors and designers.

The Contractor shall submit to the Consultant dimensioned plan and section co-ordinated services drawings for known congested areas. These drawings shall adequately demonstrate that proper co-ordination of the works shall be achieved within the allocated service zones and with the building structure and finishes.

It is the Contractor's responsibility to ensure that potential clashes are identified before work commences in all areas. The Contractor shall ensure that such co-ordination planning is programmed to provide reasonable time for modifications to be detailed where necessary before installation is due to commence.

The working drawings shall be provided by the Contractor together with site sizes and the necessity of arranging access to all services for maintenance, and to establish the inter-relationship of services in confined spaces. Builderswork drawings shall be provided by the Contractor with full knowledge of the inter-relationship of all services present.

The exact position in the works of the above items relative to grid lines, floors, beams, ceiling, walls and other structural items and any other services in this contract is the responsibility of the Contractor.

3.11 Progress Drawings

The Contractor shall keep on site one full set of prints of the working drawings marked with the progress of all work in connection with this contract.

These drawings, which shall be maintained in clean condition, shall be kept up to date on a weekly basis, and all pipe lines, tray and trunking, positions of equipment and apparatus, including all modifications and/or variations, shall be clearly recorded by the Contractor on the drawings as they are installed.

The Contractor shall retain and make the above drawings available at any time for inspection by the Consultant.

3.12 Attendance

The Contractor shall be responsible for the execution of the following works:

Supplying all relevant information pertaining to chases in floors, walls and ceilings where necessary.

Setting out all holes, ducts, etc., required through walls and any other structures.

Providing the information regarding the disposition, number and dimensions of all Services in partition walls.

This information may be conveyed by marking out and or drawn information as required and agreed under the particular contract.

The Contractor shall include any necessary attendance on site to allow co-ordination of these activities with the main Contractor or sub-Contractor carrying out the work.

3.13 Interruption of Existing Services

The Contractor shall not, unless he has received the written permission of the Consultant and contract administrator, interfere with, or interrupt in any way, the operation of any existing services such as gas mains, water mains, sewers, drainage, electricity cables, etc., and in the case of the work of statutory authorities or private owners, without also having received permission of such authorities or owners.

The Contractor shall be responsible for any damage to such services caused by the Contractor's personnel and equipment and shall make good any such damage at his own expense, to the satisfaction of the contract administrator, authorities or owners.

3.14 Connecting to Existing Services

The Contractor shall notify the Consultant and the contract administrator in writing, giving a minimum of seven days' notice, of his intention to connect into or isolate any existing services and await his approval for so doing. The notice shall be accompanied by a method statement for the works which includes detailed timings with regard to preparation duration and service interruption.

3.15 Notice Prior to Cover

The Contractor shall notify the Consultant and contract administrator in writing, giving a minimum of seven days' notice, whenever any works or materials are ready to be covered externally and internally within building fabric, floors, ceilings, earth or otherwise hidden and shall leave these works uncovered until they have been inspected and approved by the Consultant or contract administrator.

Any work which is covered or hidden before inspection by the Consultant or contract administrator, shall, where required be uncovered and subsequently made good at the expense of the Contractor.

3.16 Protection of the Installation

The Contractor shall allow for taking all necessary precautions to protect the complete installation from any damage which may occur before handover and written acceptance by the Consultant or contract administrator.

The cost involved in repairing any damage before handover.

3.17 Removal of Rubbish and Cleaning

The Contractor shall at all times keep the site free from obstruction and rubbish insofar as they are a direct result of carrying out the contract works and he shall remove from the site at his own expense, all surplus materials and temporary works which were brought on to the site by as soon as these are no longer required. On completion of the works, the Contractor shall leave the site in a clean and tidy condition, to the satisfaction of the Consultant and contract administrator.

3.18 Notices and labels

The Contractor shall supply and erect warning and advisory notices in plant rooms and switchrooms. The notices shall wall mounted in a protective frame.

All plant, equipment, components, isolators and switches shall be fitted with labels detailing their function. The labels shall be black characters engraved on white traffolyte securely fixed to the equipment.

3.19 Final Connections

The Contractor shall allow for making all final connections to equipment and for co-ordination with the equipment supplier or manufacturers.

3.20 Building Regulations Compliance

The design and installation of the building services shall meet or exceed the requirements of the Building Regulations.

The Contractor shall include for the necessary provision of information and negotiation with the approving body to achieve Building Regulations approval and certification.

The Contractor shall be responsible for all works and design time associated with calculations and submission to achieve Building Regulations approvals including liaison with the architect and completion of Part L2A calculations.

The Contractor shall include for providing all calculations required to demonstrate compliance with Building Regulations Part L2A inclusive of Achieving the BER' using approved dynamic thermal modelling software.

All calculations shall be provided to the Consultant for comment prior to being formally issued to Building Control.

3.21 Planning Approval

The design and installation of the building services shall be arranged and achieve or meet the planning approval. The Contractor shall include for any design requirements to meet planning regulations and shall provide the architect with any information or drawings required for submission to the planners.

3.22 Licensing Approval

The design and installation of the building services shall be arranged to achieve a licensing approval if applicable.

3.23 Samples

The Contractor shall provide a sample, properly labelled, of any materials and products proposed for use in the works, on request of the Consultant.

Such samples shall be submitted to the Consultant for his comment at his offices or elsewhere as directed, with all parts left loose, so that they may be taken apart for internal inspection by hand without the necessity of using spanners, screwdrivers or wrenches.

The Consultant may require such samples to be subjected to tests designed to ensure compliance with British Standard and other relevant Specifications and requirements of this contract.

The Contractor shall provide the facilities and apparatus for such tests and carry them out in the presence of the Consultant. The Contractor shall also replace the samples where necessary.

Volume 2 – Particular Requirements

1. Standards & Performance
2. Utility Services
3. MEP Services Plant Space & Distribution Strategy
4. Mechanical Services Installation

   Appendices

   Appendix 1 - Approved Manufacturers, Suppliers & Installers

   Appendix 2 – Mechanical Services Schedules
5. Electrical Services Installation

   Appendices

   Appendix 1 - Approved Manufacturers & Suppliers

   Appendix 2 - Approved System Installers

   Appendix 3 - Electrical Equipment Connection Schedules

   Appendix 4 - Proposed Luminaire Schedules

   Appendix 5 – ICT Responsibilities Interface Matrix

   Appendix 6 – Lighting Control Methodology & Equipment Schedules

   Appendix 7 – Security System Equipment Schedules

   Appendix 8 – Fire Alarm & Aspirating System

   Appendix 9 – EVC Equipment Staff Provision

   Appendix 10 – Accessible Toilet Alarm Equipment Schedule

   Appendix 11 – Induction Loop System

   Appendix 12 – Access Control & intercom System

   Appendix 13 – Intruder Alarm System

1.0 Standards and Performance

1.1 Standards

The MEP installations will be provided to meet all relevant standards and performance requirements including British and Institutional Standards, Chartered Institute of Building Services Engineers Design Guides, Codes of Practice and other applicable UK trade and workmanship standards.

The MEP services installations shall be undertaken in strict accordance with this specification, the associated drawings and the Employers Requirements.

Mechanical and Electrical sub-contractors employed to carry out the design and construction works will be registered and approved members of HVAC and NICEIC.

All work on site will be carried out to a high level of workmanship and be to the satisfaction of the Contract Administrator.

1.2 Performance Criteria

The performance criteria for the specific MEP installations are defined within this performance specification and the associated documents forming the Tender and/or the Employers Requirements documentation.

1.3 Building Regulations Approved Document L

The design and installation of the MEP services shall meet or exceed the requirements of Building Regulations Approved Document L and all associated second tier documents.

The contractor will carry out all necessary calculations including Part L2A calculations using IES dynamic simulation thermal modelling software to demonstrate compliance with AD Part L2A.

Refer to Hannan Associates Part L2a Compliance Report for further details.

The MEP services plant and equipment installed will, as a minimum, meet the energy efficiency requirements as detailed within Approved Document L and the Non Domestic Building Services Compliance Guide.

1.4 Building Energy Performance Certificate Rating

Preliminary EPC calculations has been carried out for the development as detailed within the Part L2A Compliance Report referenced within this performance specification.

Copies of the preliminary EPC certificates are contained within the Part L2A Compliance Report.

The contractor will carry out all necessary calculations including EPC calculations using IES dynamic simulation thermal modelling software.

Refer to Hannan Associates Part L2a Compliance Report for further details.

The contractor will provide the final as constructed EPC certificates one week in advance of the date of Taking Over.

1.5 British Council for Offices (BCO) Guidance

The MEP services installations shall comply with the British Council for Offices (BCO) 2019 Guide to Specification recommendations in respect of MEP design criteria, except where stated otherwise.

2.0 Utility Services

2.1 Contractor Responsibilities

- Identify the need for any disconnections or diversions of existing utility services.
- Assessment of utility load requirements.
- Procurement of all utility services works including diversions and new supply connections.
- Obtaining and progressing utility quotes.
- Management of all utility service works on site.
- Co-ordination of all utility service works on site.
- Organising the installation of utility service metering.

2.2 Design Standards

- HSG47 'Avoiding Danger from Underground Services'.
- NJUG Guidelines on the Positioning of Underground Services.
- Utility Service Providers Specific Requirements.
- Ofgem Regulations.
- Ofwat Regulations.

2.3 Existing Underground Services

Up to date existing utility services record drawings have been obtained from the licenced utility providers for all areas of the site and adjoining boundaries, footpaths, and highways before works commence on site and are located within the supplementary information section of this specification.

A sub scan survey of the existing utility services located within the areas directly surrounding the site has been commissioned by the Client and a copy of the resulting information/drawing will be made available to the contractor.

Findings will be reported by way of dimensioned drawings, photographs and supporting text descriptions.

The advice in HSG47 'Avoiding Danger from Underground Services' will be followed whilst working on site.

2.4 Existing Underground Services Diversions & Disconnections

It is the contractor's responsibility to clear the site of any existing cables, pipes, ducts, conduits, etc. live or otherwise located on the plot, or affecting the works to enable the works to proceed.

The existence and locations of underground utilities indicated on the drawings and information included within the tender documents are not guaranteed.

The contractor will investigate and verify the locations of all existing services on site before starting any work.

The contractor will undertake all liaisons with third parties in connection with the removal of any existing services which are located within the development plot or affect completion of the works.

Any existing underground services affected by the proposed works will be diverted or disconnected by the contractor.

Proposed services diversion routes will be co-ordinated with all other site works and the external landscape design.

2.5 Utility Load Assessments

The contractor will be responsible for assessing the load requirements for each new utility connection.

A copy of the Stage 4 load assessment calculations has been included within the particular section of this specification however the contractor shall review and verify all figures in line with design prior to placement of orders for the new utility supply connections.

2.6 New Utility Services Connections

New utility services connections will be made to provide the building with water, gas, electricity, and telecom communications services.

The new utility connection requirements and approximate load capacities that will be provided are as detailed below:-

Main Building

Electricity	-	1000KVA
Gas	-	**Supply 1**
	-	500KW Biffa Workshop
	-	500KW Sublet Area 1
	-	200KW Additional Sublet / Storage Area
	-	**1,200KW Total**
Gas	-	**Supply 2**
	-	200KW MCC Bin Store – Fed from separate existing supply
Water	-	**Supply 1**
	-	4.4l/s Main Building
		(MCC Office, Biffa Office, Biffa Workshop, MCC Bin Store)
	-	0.5l/s Sublet Area 1
	-	0.5l/s Additional Sublet /Storage Area
	-	External Fire Hydrant
Water	-	**Supply 2**
	-	0.4l/s Gatehouse
	-	0.5l/s Gritter Garage
	-	External Wash Down Area

Telecoms Intake (2nr Openreach, 2nr Virgin Media & 2nr Alternative/Universal)

All service trenches, ducts and draw pits, foundations, and plinths, etc. will be provided in strict accordance with the local distribution network operators (DNO) and utility service company requirements and specifications.

The new utility service connections will be integrated into the existing distribution networks and adopted by the Distribution Network Operator (DNO).

It is the contractor's responsibility to provide all new service connections with the required capacity and complete all necessary diversion works needed to complete the project.

The contractor is responsible for progressing the new utility service connections and existing service diversion costs in conjunction with the design development including all necessary liaison with the utility supply companies and obtaining firm quotations to suit the detailed design requirements.

All orders for the new utility supply connections and diversions will be placed by the contractor.

2.7 On-Site Generation

Where applicable the utility company will be notified of the intention to install on site power generation i.e., PV Installation and associated battery storage facilities.

Any resulting requirements associated with on-site power generation will be incorporated into the design and will be utilised by the client to assist with the overall power requirements for the site i.e., vehicle charging requirements etc.

2.8 New Utility Metering Requirements

Adequate space will be provided to accommodate the Electricity, Gas and Water Supplier Meter Operators metering equipment as necessary to provide the incoming utility supply connections of the required capacity.

Any new electricity supply MPAN numbers and utility meters will be obtained from the local host DNO / electricity supplier.

2.9 Testing & Commissioning

All utility services connections will be made live in sufficient time to allow the buildings services installations to be fully tested and commissioned prior to handover.

2.10 Meter Readings

Meter readings will be taken at handover and a copy handed to the engineer and clients representative.

All costs associated with water, energy, and telecoms usage up to handover will be the responsibility of the contactor.

2.11 Approvals & Sign-Off

All utility works will be carried out to the complete satisfaction of the utility services provider.

Any works carried by an ICP will be done so in accordance with utility company's requirements.

2.12 Underground Services

Underground services include utility or privately owned, buried pipes, cables, ducts, and apparatus.

2.13 Depth of Cover

Depth of cover shall be taken as the minimum depth of cover measured to the crown of the apparatus.

2.14 Underground Water Pipe (Non Contaminated Land)

Water pipe laid in non-contaminated ground will be constructed from corrosion, chemical and abrasion resistant MDPE.

Water pipe will be colour coded BLUE and positioned in accordance with NJUG Guidelines.

2.15 Underground Water Pipe (Contaminated Land)

Water pipe laid in contaminated ground will be constructed from corrosion, chemical and abrasion resistant MDPE c/w aluminium barrier layer.

Water pipe will be colour coded BLUE + BROWN STRIPES and positioned in accordance with NJUG Guidelines.

2.16 Underground Gas Pipe

Gas pipe will be constructed from corrosion, chemical and abrasion resistant MDPE.

Gas pipe will be colour coded YELLOW and positioned in accordance with NJUG Guidelines.

2.17 Underground Power Cable

Underground power cabling will be installed direct buried or within a duct as required.

Underground cable will comprise of XLPE/SWA/MDPE (waterproof outer sheath) cable.

Power cables / ducts will be colour coded and positioned in accordance with NJUG Guidelines.

2.18 Cable Sizing

All cables will be sized in accordance with BS7671 'IEE Wiring Regulations'.

Cable Quality & Markings

High quality cables BASEC certified cable sourced from reputable manufacturers and suppliers will be used.

- All cabling will display the following markings;
- Manufacturers Name.
- British Standard.
- Approval Body Mark.
- Harmonised Cable Mark.
- Conductor Size (CSA).
- Year of Manufacture.
- Origin of Manufacture.
- Harmonised Core Colours.

2.19 Cable Approval Bodies

- BASEC 'British Approvals Service for Cables'.
- LPCB 'Loss Prevention Certification Board'.
- BSI 'British Standards Institution'.
- ACI 'Approved Cables Initiative'.

2.20 Underground Service Ducts

Underground service ducts will be provided for the installation of underground services.

Service ducts will be constructed from high strength twin wall impact resistant HDPE.

Service ducts will be colour coded and positioned in accordance with NJUG Guidelines.

All ducts will be provided with a draw cord to aid the pulling of services through the duct.

All ducts will be sealed at either end to prevent the ingress of water and foreign matter.

2.21 Trenching, Bedding, Surround & Cover

Any services laid in a trench will be protected from damage by 100mm sand bedding, surround and cover.

Any remaining cover will be reinstated using selected backfill which is free from stones greater than 40mm, clumps of clay greater than 100mm, organic matter and frozen material, compacted down in 150mm layers.

2.22 Access Chambers

Access chambers will be the modular type constructed from high strength moulded plastic.

Each access chamber will be provided with a lockable frame and cover suitable for its intended location.

Recessed covers designed to be filled with landscaping material will be provided in landscaped areas.

GRP slip resistant covers will be provided in all other areas subject to agreement with the architect.

All covers will be provided with a suitable locking system and display the utility identity mark.

A suitable concrete base and surround will be provided for each access chamber c/w drainage channels.

Access chambers will generally be provided at all changes in direction and no greater than 60m apart.

All access chamber covers will be fully coordinated with the landscape architect.

2.23 Feeder Pillars

Feeder pillars will generally be constructed from 5mm hot dipped galvanised steel c/w factory applied UV resistant powder coated paint finish to architects spec, anti-corrosive bitumen paint root treatment, cable entry slots, hinged access door(s), anti-vandal lock, earthing points, treated exterior grade wooden backboard, integral RCBO protected 13A metal clad socket, IP65 luminaire, metal clad light switch and warning labels.

A suitable concrete base will be provided for each feeder pillar c/w drainage channels and cable entry ducts.

An earth electrode will be provided at each feeder pillar in accordance with the requirements of BS 7430.

All exposed metalwork including the housing and door(s) will be connected to the main earthing terminal.

2.32 External Lighting Columns

External Lighting columns, unless stated otherwise will generally be constructed from hot dipped galvanised steel c/w factory applied UV resistant powder coated paint finish to architects spec, anti-corrosive bitumen paint root treatment, cable entry slot, single base compartment, hinged access door, anti-vandal lock, earthing points, treated exterior grade wooden backboard and suitable luminaire mounting bracket(s).

External lighting columns will be of the hinged type to allow the luminaire heads to be lowered to a safe working height for installation and ongoing future maintenance.

2.33 CCTV Columns

CCTV columns, unless stated otherwise will generally be constructed from hot dipped galvanised steel c/w factory applied UV resistant powder coated paint finish to architects specification, anti-corrosive bitumen paint root treatment, cable entry slot, single base compartment, hinged access door, anti-vandal lock, earthing points, treated exterior grade wooden backboard and suitable camera mounting bracket(s).

External CCTV columns will be fixed type with protection installed below cameras to protect against vandalism or tampering.

2.34 Column Protection

Any columns susceptible to being hit by moving traffic will be protected by vehicle barriers to architects specification.

2.35 Column Wiring

Suitably rated IP43 moulded fused cut-out units c/w brass cable entry gland plate, brass terminals and extension box will be provided in each column for the termination of incoming and outgoing cabling.

Internal column wiring will be carried out using multicore PVC insulated / PVC sheathed wiring cable.

3.0 MEP Services Plant Space & Distribution Strategy

3.1 Outline Strategy

The MEP services plant space and services distribution strategy has been developed with the architect and structural engineer to provide a coherent and co-ordinated approach.

The current building design includes spatial allocation for MEP services major plant and distribution routes.

Adequate space is to be provided to accommodate internal and external MEP services plant and internal MEP services equipment and distribution systems through vertical risers and ceiling voids. Where possible plant has been located at ground floor level.

MEP services will typically be routed exposed within the warehouse area and within office areas of the building within ceiling void.

Where possible all MEP services will be concealed within the building fabric and finishes with exposed services provided within the areas of the building with exposed soffits and fair faced walls as per the architectural finishes.

3.2 Plant Strategy

The MEP services design and plant strategy has been developed to provide separation between the landlords and the tenant's services and to enable ease of installation and maintenance of the MEP services wherever practicable.

3.3 Primary Plant Locations

The primary plant locations are as detailed:-

- ENWL network substation No1
- ENWL network substation No2
- Substations 1 and 2 - LV switchrooms
- Plant room – Booster sets, extract fans and control panels
- External plant area – External condensers, Main AHUs

3.4 Roof Plant Access

Regular access to the roof level plant area for planned preventative maintenance will be provided.

All roof mounted plant must be positioned to allow clear and safe access to be provided around all plant and equipment.

A safe method of access to the roof plant areas to enable planned preventative maintenance and regular inspection to be carried out must be provided.

3.5 Access to Roof Plant Enclosure for Major Replacement

A methodology for major plant replacement (PVs, etc) is to be provided by the contractor.

3.6 MEP Service Risers

MEP service risers will be provided where required to facilitate the vertical distribution of services.

Sufficient space will be designated within the service risers and the services shall be installed in a location that facilitates safe access to all MEP services.

Regular access into the risers for planned preventative maintenance and inspection will be enabled by full height lockable access doors.

3.7 Horizontal Services Distribution

Generally a clear services distribution zone will be provided below the building to assist with distribution of MEP services.

A clear lighting zone allowance of 100mm minimum will also be maintained between the underside of the structure and the mechanical services installations.

Office areas will be provided with a fully accessible metal raised access floor. A 150mm minimum raised access floor will be provided for routing of electrical and telecoms/data services.

The mechanical and electrical services will be routed from the respective plant area / vertical service risers to the area served.

Installation of MEP services routed at high level within the open plan office areas is anticipated to be by mobile platforms. Access for maintenance will also be by mobile platform via either the removable tiles, within the suspended ceiling or ceiling access panels in the areas where fixed ceilings are provided.

3.7.1 Operating and Maintenance Manuals

The methodology for planned preventative maintenance, major maintenance inspections, maintenance activities, refurbishment and replacement of the MEP services installations are to be detailed within the Operating and Maintenance manuals with any residual risks and particular method statements highlighted.

4.0 Mechanical Services Installation

4.1 Standards and Regulations
4.2 Heating Systems
4.3 Cooling Systems
4.4 Ventilation Systems
4.5 Domestic Hot & Cold Water Services
4.6 Natural Gas Services
4.7 Automatic Controls System
4.8 Fire Safety Systems
4.9 Above Ground Drainage
4.10 Sanitaryware

Appendices

Appendix 1 – Approved Manufacturers, Suppliers & Installers
Appendix 2 – Mechanical Services Schedules

4.0 Mechanical Services Installation

4.1 Standards and Regulations

As minimum benchmarks, the plant and equipment efficiencies, COPs etc. will be as the Non-Domestic Building Services Compliance Guide and ErP Eco Design Directive. Variable speed drives will be incorporated on large motors as advised in the Non-Domestic Building Services Compliance Guide.

The contractor shall design the mechanical services in accordance with the following documents, as current at the time of design:-

Manchester City Council – Hammerstone Road Employers Requirements (2018)

Manchester City Council - Standard Specification for Mechanical Engineering Services (2018)

Manchester City Council - Standard Specification for Building Services Automatic Controls (2018)

All relevant British and European Standards

All relevant statutory requirements/legislation

Building Regulations and Approved Documents

The Water Supply (Water Fittings) Regulations

Gas Safety (Installation and Use) Regulations

CIBSE (Chartered Institute of Building Services Engineers) guidance and publications

IOP (The Institute of Plumbing) guidance and publications

BSRIA (Building Services and Information Association) guidance and publications

BRE (Building Research Establishment) guidance and publications

HSE (Health and Safety Executive) guidance and publications

IGEM (Institute of Gas Engineers and Managers) guidance and publications

BESA (Building Engineering Services Association – formerly HVCA) guidance and publications

Specialist industry standards and guidance where applicable (e.g., British Compressed Air Society, British Compressed Gases Association etc)

British Council for Offices (BCO) 2019 Guide to Specification

Equipment manufacturer's specific equipment application guidance

UKAS - LAB 36 Laboratory Accommodation and Environment in the Measure of Length, Angle and Form – Edition 4 October 2019

Omega Fire – Fire Strategy

Ramboll – Acoustic Report

4.1.1 Phasing of Works

The contractor shall take into account the phasing of works and achieving continuity of service to occupied spaces with minimal disruption. If necessary, temporary services shall be provided to ensure such continuity.

4.1.2 Sub-metering

Sub-metering is to be installed as required by the Building Regulations and recommended by the guidance given in CIBSE Technical Memorandum TM39: Building Energy Metering (a guide to energy sub-metering in non-domestic buildings).

Also, client's particular sub-metering requirements shall be incorporated.

4.2 Heating Systems

4.2.1 Scope & Objectives

The contractor will design, supply, install, test, commission and set to work heating installations inclusive of all necessary plant, distribution equipment, controls, etc. to provide fully functional and energy efficient systems.

4.2.2 VRF Heating/Comfort Cooling Systems

Space heating to the occupied areas of the MCC Offices (excluding lab rooms) and Biffa Offices shall be provided via simultaneous Variable Refrigerant Flow (VRF) heating/comfort cooling systems as indicated on the indicative zoning tender drawings.

Refer to “Cooling Systems” Section for further details.

4.2.3 DX Split Heating/Comfort Cooling Systems

Space heating to MCC Lab rooms (excluding the weights room), server rooms and gritter garage shall be provided via direct expansion (DX) split heating/comfort cooling systems as indicated on the indicative zoning tender drawings.

Refer to “Cooling Systems” Section for further details.

4.2.4 Lab Room Air Conditioning Systems

Space heating to the weights room shall be provided via a dedicated air conditioning system as indicated on the indicative zoning tender drawings.

Refer to “Cooling Systems” Section for further details.

4.2.5 Biffa Workshop Gas Fired Radiant Heating System

Space heating to the Biffa Workshop shall be provided via a high level gas fired radiant heating system as indicated on the indicative zoning tender drawings.

Temporary gas fired radiant heating has recently been installed within the workshop area and is to be reused and extended / modified where required to serve the new workshop facilities. The MCC Bin Store will be used as a temporary workshop whilst the redevelopment works are carried out and the existing heating system will need to be modified to serve the MCC Bin Store.

The Mechanical Contractor shall supply, install and commission gas fired U Tube radiant heaters, as manufactured by Nortek, model Reznor Vision VS50UHEN complete with Ambirad SmartCom zone controllers and black bulb sensors.

Each radiant heater shall be rated at 48kW (input).

The heater manufacturer’s proprietary fan assisted flue system shall be installed to suit the zoning/grouping of the heaters, each arrangement to be complete with end-of-run vacuum flue fan and through-the wall terminal. The termination point should be located in a freely exposed position and must be situated as to prevent the products of combustion entering the building via any opening. Flues must be terminated with an approved terminal fitting. The flue installation must be designed to the latest gas regulations and any local environmental standards. Flue systems must comply with national and local regulations.

Where a flue passes through a combustible roof, ceiling or floor, the flue pipe should be surrounded with a metal sleeve, the size of which should be sufficient to provide a space not less than 25mm between the flue pipe and the sleeve when positioned.

Single phase electrical power shall be installed by the Electrical Contractor within 3m of each SmartCom controller, and each end-of-run vacuum flue fan. The supplies shall terminate with a suitably rated local isolator. The Mechanical Contractor shall install all electrical power and control wiring required, from each isolator to its respective controller and from each controller to their associated heaters and flue fans.

All equipment and associated ancillaries and services shall be neatly installed in accordance with manufacturer's installation instructions and the Specifications including all clearance and future access requirements.

All equipment and services shall be securely and robustly supported from, or fixed to, the building structure. The Mechanical Contractor shall provide any necessary primary supports where these are needed. Where chain supports are proposed for suspension of equipment, these shall be galvanised welded link type. The heaters shall be level and aligned parallel with the building column lines.

The Mechanical Contractor shall supply, install and commission the radiant heater equipment manufacturer's proprietary control units and associated black bulb sensors together with interconnecting control cables. The control units shall also incorporate an additional user operable heating time extension control to allow up to 2 hours of extended heating beyond the programmed scheduled times.

The Mechanical Contractor shall supply and install the complete system of automatic controls and the interconnecting wiring as specified in MCC's Standard Controls Specification.

The location of the heat emitting equipment will be carefully considered. If appropriate, a mixture of types of emitter e.g., for general heating and local "spot" heating should be considered to ensure, wherever possible, that each worker has sufficient exposure to radiant heat in their place of work.

Care will be taken to avoid proximity of radiant equipment to combustible materials and flammable vapours, and to position equipment where it will be maintainable and safe from impact damage.

Care will be taken to ensure the combustion gases (e.g., CO2, CO, NO, NO2) levels do not exceed the limits stated in the appropriate design references. Should areas be enclosed, flues to external walls may be necessary.

The heating method may still give rise to significant convective heat e.g., from the emitter and from heated building fabric and bodies etc., Temperature controlled destratification fans / fan units should be considered to assist in keeping convective heat within occupied zones.

All gas pipework serving the heating system shall be located above the height of the heater and shall connect complete with isolation valve and flexible connection. Gas distribution pipework shall be routed in order to provide maximum clear height within the workshop except where pipework drops to connect to each unit.

4.2.6 Sublet Area Gas Fired Radiant Heating System

As the layouts and requirements for the sublet areas are not known, it is proposed that this space is to be shell only. It is proposed that the gas main is provided with branch connections for future use (valved and capped off) to enable heating to be provided at a later date.

4.2.7 Overdoor Air Curtains

The contractor shall supply and install overdoor air curtains within the Biffa workshop to temper the incoming external air. The air curtains shall be installed directly above all vehicle access doors.

The contractor shall supply and install electric overdoor air curtains above all external doors to a conditioned space within each demise. Doors that are either lobbied, fire escapes or are not frequently used do not require air curtains. The air curtains shall be installed directly above appropriate doors. Refer to the drawings for locations of where they're required.

Each air curtain shall be controlled from the BMS system and be complete with a frequency invertor for variable fan speed regulation, integral controls, temperature sensors and a remote control facility.

The remote controller shall provide the following functions:-

- Unit on/off
- Fan speed setting (3 speed minimum)
- Temperature setting

The air curtains are selected to ensure that the space design temperature within the area served is achieved taking into account the doors opening during peak entry/exit periods. The noise level within each space shall not exceed the maximum NR levels for each respective demise with the air curtain operating at the highest speed setting.

The contractor shall agree the type, material and finish of the heater and grille with the Employers representative and the Architect prior to installation.

4.2.8 Electric Heating

Space heating to the ancillary areas of the development not covered by the VRF comfort cooling/heating systems shall be heated only by high quality glass fronted electric panel heaters as indicated on the indicative zoning tender drawings and where required to achieve the space temperature detailed within the design criteria. Panel heaters within disabled toilet areas shall be low surface temperature type.

The panel heaters are to be Dimplex, wall mounted electric panel heaters and are to include;

- On / off switch
- Digital thermostat
- Digital temperature display on front panel
- Night-time temperature reduction
- Safety cut-out to safeguard against overheating.
- Temperature range of thermostat: 6 – 30°C
- Maximum surface temperature: 75°C
- Ingress Protection Rating: IP20

Each panel heater shall be complete with an integral electronic thermostat and 7 day programmable time controller. Operation of the electric panel heaters shall be controlled via the BMS system via contactor controlled power circuits and an external temperature sensor to give daily on/off operation and hold off when the external ambient temperature is above a pre-set value (adjustable via the BMS).

The style/finish of the electric panel heaters are to be approved by the Client and Architect prior to procurement and a sample provided. The contractor shall agree the locations of all panel heaters with the architect prior to installation.

In areas where wall space is limited (core toilet areas) ceiling mounted electric radiant panel heaters may be provided as an alternative to wall mounted panel heaters. The same level of time and temperature control via the BMS will be provided.

The Electrical Contractor shall install power supplies to the electric panel heaters in the locations required by the Mechanical Contractor.

The contractor shall include for removing and re fixing all heat emitters once after initial installation to allow decorating to take place.

4.2.9 Electric Heater Batteries

Areas where ventilation is provided directly into the space and not onto the back of a VRF unit shall be provided with local duct mounted electric heater batteries. These areas include, but are not limited to, Changing Areas, Showers, Library area.

Supply and extract ventilation shall be provided to each space via the air handling plant at the rates specified. The supply air shall be tempered as required to ensure the space temperature and occupant thermal comfort is maintained.

4.2.10 Libraries Store, Pest Control Store & Arboriculture / Public Realm Store

Suitable heating and ventilation shall be provided to the Libraries Store, Pest Control Store and Arboriculture / Public Realm Store. Final requirements to be confirmed by MCC.

4.2.11 Frost Protection Heating

Plant rooms shall be provided with frost protection heating via tubular electric heaters. The tubular heaters shall be IPX4 rated complete with auto-reset thermal overload cut out and shall be installed within heater guards.

4.2.12 Design Criteria

The design of the mechanical engineering services will comply with current British Standards, Codes of Practice and CIBSE Design Guides. requirements for the heating systems are as detailed below;

4.2.12.1 External Design Conditions

Winter - -5°C (Dry Bulb @ 100%rh)

4.2.12.2 Internal Design Temperatures

Refer to the heating and comfort cooling strategy drawings for details of the internal design temperatures within each area of the building.

4.2.12.3 Control Tolerance

A deviation of +/- 2°C will be permitted as a control tolerance for a short duration while the heating/cooling system reacts to load changes.

4.2.12.4 Relative Humidity

Relative humidity is uncontrolled in all areas except within the Lab rooms.

4.2.12.5 Noise Criteria

Workshop - NR45

Refer to the Acoustic report for further details of noise level requirements.

4.3 Cooling Systems

4.3.1 Scope & Objectives

The contractor will design, supply, install, test, commission and set to work cooling installations inclusive of all necessary plant, distribution equipment, controls, etc. to provide fully functional and energy efficient systems.

4.3.2 VRF Heating & Cooling Systems

Comfort cooling and space heating to the MCC Offices and Biffa Offices is to be provided by simultaneous Variable Refrigerant Flow (VRF) heating/comfort cooling systems, incorporating air cooled condensing units and using ceiling concealed ducted chassis units.

Each demise shall be served from a dedicated VRF system. No VRF system shall serve another demise.

Within open plan office areas, the chassis units will be provided on a basis of one per 27m^2 on the perimeter and one up to 70m^2 within internal zones in strict accordance with BCO recommendations.

The final locations of indoor units will be determined after the furniture layout has been determined in order to avoid location of indoor units over desks and equipment.

Care will be taken to provide as uniformly comfortable thermal environment as is practically and financially achievable, avoiding thermal discomfort caused by draughts, large air temperature differentials or “dumping” of low velocity cold dense air.

The comfort cooling/heating systems shall be provided by High COP simultaneous heating and cooling variable refrigerant flow heat pump systems using R410A refrigerant, as manufactured by Mitsubishi Electric Living Environmental Systems.

The simultaneous heat pump VRF systems will use only two pipes throughout for the refrigerant distribution and will have the facility to provide heating or comfort cooling simultaneously to indoor units as required.

The VRF system shall monitor each indoor unit, alter the amount of refrigeration required and reduce the amount of energy input to the outdoor unit. This shall be done via a two core screened cable that links the condensing unit, centralised distribution box, indoor units, central controller and local group controllers.

The simultaneous heat pump VRF system shall have the facility to change its mode from cooling to heating. This function shall be available via the central controller and must be available as a manual changeover or as an automatic function depending on which mode is selected on the central controller.

Once the mode is changed the indoor unit shall respond by stopping the indoor fan. A standby sign shall then be indicated. The fan shall stop to prevent cold draughts being distributed to the occupants. The fan shall hold off until the coil on the indoor unit reaches a temperature of 35°C.

This shall take approximately 15 minutes from the change in mode from cooling to heating. This process shall also happen when the indoor unit changes from heating to cooling the coil temperature must drop to 13°C before the fan shall start to operate.

A built-in fault indication system shall be incorporated within the heat pump system. This fault indication system shall be pre-designed within the software and hardware.

The refrigerant pipework installation is to fully comply with the manufacturers recommended installation procedures.

The VRF installation will comply with BS EN 378:2000 Parts 1-3, BS 4434 and Guidance Note (EH 40) from the HSE as far as they are applicable to any open plan areas.

Gravity condensate drains will be installed from each indoor unit and B.C controller and connected into the above ground waste system by means of a "trapped" tundish arrangement.

Secondary energy meters on power supplies to the VRF systems shall be provided in accordance with Building Regulations Part L2A (2013).

4.3.3 High COP Air Cooled Condensing Units

The condensing units shall be of the high COP air cooled heat pump type using R410a refrigerant and will be arranged to operate on a high sensible mode of operation in conjunction with the indoor VRF units in order to elevate the minimum supply air discharge temperature.

The condensing units are to be positioned within the external plant enclosure at ground level.

The condensing units shall be installed to the manufacturer's recommended spacing requirement. This must be adhered to at all times to ensure the correct airflow and maintenance space requirements are achieved.

The refrigerant distribution pipework shall be routed from the external plant area into the warehouse building.

4.3.4 VRF Central Distribution Box (BC Controller with Port Isolation Valves)

The B.C. controllers complete with port isolation valves are to be installed above non occupied areas, where possible, positioned in a location where maintenance can be carried out with the minimum of disruption to the building occupants.

The contractor is to include for acoustic enclosures around the BC controllers to ensure any noise generated via the BC controllers during normal operation and the defrost cycle is not evident within the occupied area.

The BC controllers shall be suitably suspended with fixings back to the soffit or building structure in accordance with the manufacturer's installation manual.

The size of the B.C. controllers shall be as required to distribute refrigerant properly to the indoor units under cooling and heating modes.

The BC controllers shall have the facility to connect the required number of indoor units to the appropriate zone. Unused ports shall have isolation valves and be capped off for possible future extension.

The centralised distribution BC controllers shall be fitted with suitable solenoid valves and a liquid/gas separator to ensure that the correct amount of refrigerant is distributed to each indoor unit, when either the heating or cooling modes are selected.

The BC controllers shall also include a plate heat exchanger which will recover waste heat from units in cooling operation and distribute this to units requiring heating. The opposite will happen in cooling operation.

The refrigeration process in the BC controllers shall be maintained by LEVs (linear expansion valves) which will be controlled by pressure and temperature sensors. The BC controllers will require a 240V ac mains supply. Control will be via the 30Vdc signal from the condensing unit.

The condensing units and centralised distribution boxes must use the latest Variable Refrigerant Flow (VRF) technology to recover waste energy and regulate the amount of refrigerant to each indoor unit.

The centralised distribution boxes shall be installed in accordance with the manufacturer's recommendations. Care should be taken to ensure the correct service space requirements are allowed for.

4.3.5 Indoor VRF Units (High Sensible)

All indoor VRF units will be ceiling concealed ducted chassis units suitably suspended with fixings back to the soffit in accordance with the manufacturer's installation manual. Indoor units will be located above the ceiling of the area served, except where there are no ceilings, in which case they will be exposed.

Each indoor VRF unit shall be selected based on **high sensible basis** to provide the total heating/cooling duty for the room served **at low or medium speed operation** in accordance with the design criteria noted within this specification.

Where indoor units are provided to areas that have no ceilings, the contractor shall include for acoustic enclosures around each indoor unit as well as return air attenuators to each unit in order to ensure any noise generated via the indoor units during normal operation and the defrost cycle is not evident within the occupied area.

Each indoor unit will have a heat exchanger which shall be constructed from copper tubing with aluminium fins. The flow of refrigerant through the heat exchanger will be controlled by a linear expansion valve. This valve will be controlled by two pipe thermistors and a return air thermistor and shall be capable of controlling the variable capacity of the indoor unit between 25% and 100%.

Generally indoor units shall be installed such that filters can be replaced easily.

Each indoor unit shall measure the room temperature via a sensor fixed to the back of the indoor unit and adjust the amount of refrigerant to the indoor coil via an electronic valve. The centralised control box shall provide the refrigerant in the correct state depending on whether the indoor unit requires heating or cooling.

Sensor set point offsets will be adjusted during installation and commissioning to suit the installed position of the sensor.

The temperature of the discharge air from the indoor unit itself shall automatically be altered to provide and maintain the required temperature displayed on the BMS system. The indoor unit shall have the facility via the BMS to maintain a room temperate between 19°C and 28°C in steps of 1°C.

The indoor unit sensor shall only allow a deviation of +1.5°C or –1.5°C to that of the room temperature required.

Supply air from the indoor VRF units shall be distributed from circular spigot connections on an insulated rectangular section plenum box and distributed through insulated solid circular ductwork to supply air diffusers.

Air volumes shall be provided to maintain correct air distribution in both heating and cooling modes from the supply air diffuser and technical advice shall be sought from the diffuser manufacturer. The design requirement may ultimately affect the size of VRF unit provided after considering pressure drop, air volume, and supply air temperature and noise generation.

4.3.6 VRF System Central Controllers

1No. AE 200 central VRF controller shall be provided to each of the MCC Offices and Biffa Offices in order to provide control of the VRF units within each respective demise.

Each AE 200 central controller shall provide on/off, space temperature, mode of operation, fault diagnosis, fan status/speed control etc for each VRF unit within the area served.

Suitable interface units (Procon, XNC,) will be provided by the air conditioning contractor to enable full interface control and diagnostics of the AE 200 controllers to the central BMS system.

The AE 200 central controller shall be suitable to provide the following functions:-

- Unit On/Off
- Fan Speed Setting
- Temperature Setting
- Mode Selection Heating/Cooling/Fan Only/Dry/Auto
- Timer Operation
- Permit/Prohibit Function
- Indoor Return Air Temperature

- Error Indication
- Test Run Function
- Ventilation Interlock
- External Input/Output
- Fault Diagnosis
- Test Run Facility

The AE 200 controllers will be wall mounted within the appropriate plantroom or store room of each demise. Final location is to be agreed.

Each central controller will require an additional power pack which will be wall mounted local to the controller housed in a steel box enclosure which will have a white gloss finish.

Each central controller shall be interfaced to the fire alarm system to enable automatic shut down upon activation of the fire alarm and automatic restart once the fire alarm has been reset.

4.3.7 Local Group Controllers

The indoor VRF units within the open plan office areas shall be locally controlled in groups (maximum of three indoor units per controller) via local wall/column mounted microprocessor remote controllers as indicated on the tender drawings.

The indoor VRF units serving cellular areas of the MCC Offices and Biffa Offices shall be controlled locally via a wall mounted microprocessor remote controller serving each area independently as indicated on the tender drawings.

4.3.8 Control Wiring

The air conditioning contractor shall be responsible for all the interconnecting control wiring between the indoor VRF units, air cooled condensing units, BC distribution boxes and centralised controllers. The control wiring shall be two core screened type routed on cable tray supplied and installed by the air conditioning contractor.

All control wiring is to be carried out in 2 core 1.5mm PVC screened cabling routed on cable tray supplied by the air conditioning contractor. The controls cables shall be colour coded and tagged with ID number at 3 metre intervals as per schematics for ease of identification and maintenance.

Galvanised trunking/conduit shall be not less than 20mm, seam welded, screwed, heavy gauge, class 2 to BS 4568. Class 2 fittings shall be used. Class 4 shall be used in situations exposed to weather. All conduits shall be installed in accordance with the manufacturer's information.

Controls wiring shall not be routed adjacent to power wiring. A minimum space of 100mm between both control and power cables shall be maintained.

4.3.9 Power Wiring

The electrical contractor will provide and install the power wiring to the VRF plant and equipment including the following:-

- Air cooled VRF condensing units.
- Central refrigerant distribution box (BC controller)
- Indoor VRF units
- AE200 central controllers
- DX heat pump system indoor units and external condensers

The indoor VRF units, BC controller & AE200 power supplies will terminate in a metal clad switched fused spur with flex outlet.

Final connections to the VRF system equipment shall be carried out by the air conditioning contractor together with all necessary controls and interconnecting power wiring associated with the complete comfort heating/cooling system.

4.3.10 Refrigeration Pipework and Fittings

The VRF refrigerant pipework shall be routed throughout its length up to and including the final connection to the indoor unit on galvanised containment tray with the routes fully co-ordinated with the cell holes within the structural beams and all other services installations.

The pipework will be fixed/bracketed in accordance with the manufacturers recommended spacings. Pipe supports shall be insulated clamp type such as CUSH-A-CLAMP to maintain vapour barrier protection.

Design, materials and installation of refrigerant piping systems shall be to BS EN 378 and Institute of Refrigeration Codes of Practice.

The pipework shall be installed in refrigerant quality, seamless, high purity soft cooper tubing to BS 2871, Part 2 ASTM B.280/86 and ASTM B.88 and will be of straight lengths half hard condition.

Fittings shall only be used when tight radius bends are required, long radius bends should be seed or formed by bending on site, no tees shall be allowed and all branches shall be of Mitsubishi approved type.

Pipework shall be carried out by an Approved Refrigerant Engineer (certificate approval must be submitted prior to installation commencement) and in accordance with the current version of BS EN 378 2008 and Mitsubishi Electric design and installation instructions.

Longest possible lengths of copper pipe should be utilised to minimise joints on site. All joints shall be brazed except at connections to indoor units, BC controllers and condensing units, which shall be, flared connections. Appropriate refrigeration installation tools must be utilised. Dry Nitrogen must be utilised at all times during brazing.

All pipework (suction and liquid lines) to be insulated with slip on close cell elastomeric pipe insulation (as manufactured by Armaflex or equal and approved) with a fire performance Class “0”, having a wall thickness of not less that 13mm.

All pipework is to be labelled with ID number identifying the associated condensing unit reference number at a maximum of 3 metre intervals.

Joints in copper pipe shall be brazed. Brazing shall be carried out to the requirements of the HVCA Code of Practice – Brazing and Bronze Welding of Copper Pipe and Sheet.

On completion of the installation the system shall be tested to a pressure of 450 PSI using nitrogen. Pressure tests to the system shall be for a minimum of twenty four hours and shall be witnessed by the Engineer. All pressure test certificates shall be provided for inclusion into the O&M manuals.

The refrigeration circuit shall be evacuated to 10 m bar and shall be witnessed at this level for twenty four hours to prove dehydration is complete.

The actual installed length of refrigeration pipework shall be measured to calculate the replenishment charge of R410A. Refrigeration R410A shall be added to the system in accordance with Mitsubishi Electric requirements.

The charging should be carried out with an appropriate charging station.

4.3.11 Condensate Drainage Pipework

All condensate shall be removed to drain via PVC or ABS pipework with solvent welded fittings.

The condensate pipework shall discharge into the above ground drainage system via a suitable trapping arrangement which is fully accessible for inspection and maintenance purposes.

All condensate pipework will be adequately supported to prevent any sagging. Condensate pipework will be routed by gravity or using pumps to maintain a gradient to contain pipework concealed within the false ceiling space arranged not to penetrate the lighting zone.

The use of condensate pumps shall be avoided wherever possible.

4.3.12 Mitsubishi Electric Inspections

The contractor shall appoint Mitsubishi Electric to complete monthly interim inspections of the air conditioning installations during the construction period to verify that the installations are being carried out in full accordance with Mitsubishi Electric requirements and that all equipment warranties will be fully maintained on completion of the installation. A minimum of 6nr inspections must be included for/carried out.

The contractor shall rectify any items raised by Mitsubishi Electric to the full satisfaction of the Engineer and Mitsubishi Electric.

Mitsubishi Electric shall issue a fully detailed report of their findings after each site inspection, a copy of these reports shall be forwarded by the contractor to the Employers Agent and the Engineer.

In addition, the contractor shall appoint Mitsubishi Electric to complete a final health check of the completed air conditioning installations prior to the date of practical completion to verify that the installations have been carried out in full accordance with Mitsubishi Electric requirements and that all equipment warranties will be fully maintained on completion of the installation.

The health check shall comprise of a full diagnostic inspection of the air conditioning installations to prove correct installation and operation of the systems inclusive of all controls and interfaces with the BMS controls system.

On completion of the final inspection Mitsubishi shall produce a report confirming that the installations have been installed, tested and commissioned in full accordance with Mitsubishi Electric requirements and all equipment warranties are in place and will be fully maintained subject to completion of planned preventative maintenance.

4.3.13 Approved Installation Contractors

The installation of all internal and air cooled VRF condensing units, refrigerant pipework, inter-connecting controls wiring, commissioning and testing shall be carried out by an approved refrigerant systems installer, from whom the contractor shall obtain quotations.

It is a contract requirement that all personnel installing the refrigeration equipment must be an approved refrigeration engineer and hold a current installation certificate and have completed the VRF equipment manufacturer's recommended training and installation courses.

The refrigeration specialist must be a Mitsubishi Diamond Quality Partner (DQP) and provide a 7 year warranty for the VRF heating and cooling installation.

Approved installation contractors are as noted later within this specification. The contractor shall clearly state on his tender submission the specialist refrigeration contractor he intends to employ to carry out the work.

4.3.14 DX Split Heating/Comfort Cooling Systems

Space heating and comfort cooling to the gritter garage shall be provided by direct expansion (DX) split heating/comfort cooling systems as indicated on the indicative zoning tender drawings.

The DX split systems serving the gritter garage shall comprise of ceiling concealed ducted chassis units, associated refrigerant pipework, control box, outdoor condensing unit etc to form a complete installation.

The associated external condensers shall be located externally adjacent to the area served. The condensing units shall be installed to the manufacturer's recommended spacing requirement. This must be adhered to at all times to ensure the correct airflow and maintenance space requirements are achieved.

The contractor shall include for local room mounted controllers, together with interconnecting wiring. The system shall be compatible with and be connected to the automatic controls system.

The local controllers shall provide full control of temperature, mode of operation and fan speed as a minimum.

Control wiring between the room mounted controller and external condenser shall be wired by the refrigerant installer.

4.3.15 Server Rooms Cooling Systems (N+1)

Cooling to each server room shall be provided by dedicated direct expansion (DX) split systems as indicated on the indicative zoning tender drawings. Each server room cooling system shall be provided on an N+1 basis. The cooling load should be based on 7.5kW unless otherwise advised by MCC.

The DX split systems serving the server rooms shall comprise of wall mounted indoor units, associated refrigerant pipework, control box, outdoor condensing unit etc. to form a complete installation.

The associated external condensers shall be located externally adjacent to the area served. The condensing units shall be installed to the manufacturer's recommended spacing requirement. This must be adhered to at all times to ensure the correct airflow and maintenance space requirements are achieved.

The contractor shall include for local room mounted controllers, together with interconnecting wiring. The system shall be compatible with and be connected to the automatic controls system.

The local controllers shall provide full control of temperature, mode of operation and fan speed as a minimum.

Control wiring between the room mounted controller and external condenser shall be wired by the refrigerant installer.

4.3.16 Lab Room Air Conditioning System

The weights room shall be provided with its own independent standalone close control cooling system, including humidity and temperature control, as indicated on the tender drawings.

The cooling system shall comprise of floor mounted up flow units, associated refrigerant pipework, controls, and outdoor condensing unit etc. to form a complete installation. The associated external condenser shall be located externally adjacent to the area served.

The up flow cooling unit shall be complete within built intelligent controller as manufactured by Airedale.

The BMS shall monitor the CCAC unit and provide alarms for faults and out of range conditions but shall not control the unit in any way.

Control wiring associated with the lab room cooling system shall be carried out by the refrigerant installer.

Condensate drainage shall be via a condensate pump utilising uPVC pipework to discharge into the above ground drainage system.

Recommended temperature limits and stability ranges for mass (F2 weights 16-25 degrees, F1 weights 17-23 degrees).

Refer to UKAS - LAB 36 Laboratory Accommodation and Environment in the Measure of Length, Angle and Form – Edition 4 October 2019 document for further requirements.

4.3.17 Design Criteria

The design of the mechanical engineering services will comply with current British Standards, Codes of Practice and CIBSE Design Guides. requirements for the cooling systems are as detailed below;

4.3.17.1 External Design Conditions

Winter	-	-5°C (Dry Bulb @ 100%rh)
Summer	-	28°C (Dry Bulb), 20°C (Wet Bulb)

4.3.17.2 Internal Design Temperatures

Refer to the heating and comfort cooling strategy drawings for details of the internal design temperatures within each area of the building.

4.3.17.3 Control Tolerance

A deviation of +/- 2°C will be permitted as a control tolerance for a short duration while the system reacts to load changes.

4.3.17.4 Relative Humidity

Relative humidity is uncontrolled in all areas except within the Lab rooms.

4.3.17.5 Office Heat Gains

Occupancy (Sensible Gain)	-	75W/Person @ 1 Person/8m^2 based on Office NIA
Equipment Gain	-	23W/m^2 based on Office NIA
Central Plant	-	16W/m^2 based on Office NIA
Artificial Lighting	-	6W/m^2 based on Office NIA
Solar, Fabric & Infiltration	-	As calculated based on building envelope design

4.3.17.6 Noise Criteria

Cellular Office	-	NR35
Open Plan Office	-	NR38
Lab Rooms	-	NR40
Stairs & Circulation Areas	-	NR40
Reception Desk Area	-	NR40
Eating and Dining Areas	-	NR40
Kitchenette / Tea Point	-	NR40
Workshop	-	NR45
Toilet Areas	-	NR45
Cleaners Store	-	NR45
Post Room	-	NR45
Showers & Changing Rooms	-	NR45
Server Rooms	-	NR45
Stores	-	NR55
Plant Noise Breakout	-	Controlled to meet local planning and environmental authority requirements as detailed in the acoustic report.

Vibration Control	-	Vibration transfer from building services plant to internal areas will not be more than 0.01 m/s2 peak acceleration (based on Wb weighting, as defined in Clause 3.3 of BS 6472-1: 2008).

All BC boxes shall be acoustically treated to reduce noise breakout in offices in accord with the acoustic report.

4.3.17.7 Pipework Specification

Refrigerant	-	Copper – BS 2871: Part 2/ BS EN 1056.
Condensate	-	PVC or ABS Solvent Welded Pipework

4.4 Ventilation Systems

4.4.1 Scope & Objectives

The contractor will design, supply, install, test, commission and set to work mechanical ventilation systems inclusive of all necessary plant, distribution equipment, controls, etc. to provide fully functional and energy efficient systems.

4.4.2 General Requirements

Mechanical ventilation systems shall be provided in strict accordance with the tender documents and the requirements/guidance given in Approved Document F. Where specific guidance is not provided within Approved Document F and no further reference is given, the designer shall refer to the recommendations of CIBSE, the Health & Safety Executive and the HVCA.

All mechanical ventilation systems shall be supplied, installed tested and commissioned to provide energy efficient operation by minimising unnecessary activation, overrunning and excessive pressure losses. Automatic controls shall be provided wherever appropriate to minimise the potential for unnecessary operation and for the minimisation of wasting energy associated with heating & cooling.

The contractor shall include for all necessary access provisions to allow for safe commissioning, operation, inspection and general maintenance of the ventilation systems in accordance with the manufacturers recommendations and industry good practice.

Care shall be taken to ensure fresh air intakes draw in uncontaminated outside air (e.g., avoiding vehicle fumes, or recirculation of exhaust air).

Exhausts from extract systems shall be carefully located to safely discharge to atmosphere in accordance with statutory requirements.

Ventilation will be provided using heat recovery equipment (supply and extract) with by-pass to enable free-cooling under the dictates of the controls and distributed to suit the locations of occupants to maintain acceptable limits of CO2 concentrations and provide oxygenated air. It is proposed that, where appropriate, CO2 sensing is utilised to vary the ventilation flow rates according to the occupation and optimise energy usage.

4.4.3 Office Area General Supply & Extract Ventilation Systems

Fresh air ventilation to the MCC Offices is to be provided via a central air handling unit located within the ground floor plant enclosure.

Fresh air ventilation to the Biffa Offices, gatehouse and gritter garage is to be provided via local air handling units located within the ceiling voids of the areas served.

Incoming fresh air shall be treated and distributed from the air handling units to the required areas of each respective demise of the building via ductwork routed within the ceiling voids. The distribution ductwork system is to be sized to cater for the fresh air requirements of the building occupants within the areas served.

Supply air distribution ductwork shall be routed from the main duct risers through the cell holes within the structural beams to discharge onto the rear of (but not connected to) the VRF units. The supply air ductwork shall terminate not greater than 300mm from the rear of the VRF unit.

Return air shall be extracted from the open plan office area via bellmouth point extracts and discharged to external atmosphere via extract ductwork and the central or local heat recovery air handling units.

Fire separation of the ceiling void will be allowed for in the design of the ventilation ductwork system where necessary in accordance with the requirements of the Fire Strategy Report.

The routes of the supply and extract distribution ductwork are to be carefully co-ordinated with the structural steelwork and all other services installations to ensure a minimum 100mm clear lighting zone is maintained throughout the office areas.

4.4.4 Central Heat Recovery Air Handling Units

The central air handling units shall incorporate inverter driven fan motors and shall recover heat from the extract ventilation system to maximise energy efficiency and shall comprise of the following in a piggyback configuration:-

Supply AHU Section

- Weathered inlet complete with bird mesh screen (attenuated where necessary)
- Inlet damper (motorised)
- G4 panel pre-filter
- F7 bag filter
- High efficiency heat recovery thermal wheel (minimum 75% efficient)
- Access section
- Heating coil (Electric)
- Access section
- Direct drive plenum fan c/w inverter and high efficiency fan motor

Extract AHU Section

- G4 panel pre-filter
- Access section
- Direct drive plenum fan c/w inverter and high efficiency fan motor
- High efficiency heat recovery thermal wheel (minimum 75% efficient)
- Discharge damper (motorised)
- Weathered discharge (attenuated where necessary)

Accessories

- Manometer fitted across filters.
- Hinged access doors on fan and filter sections.
- The unit to be provided in sections as necessary to install in position.
- Flexible connectors fitted to fans internally.
- Internal anti-vibration mounts.

The supply and extract AHU's are to be EUROVENT tested to guarantee quality of manufacture and performance and shall be of suitable construction (coils etc.) to suit the local external environment.

The units shall be delivered to site in sections and assembled in their final position within the plant area and finally air tested to DW/143 recommendations 'Class B'.

All AHU's shall be suitable for mounting externally with 50mm thick double skinned/insulated panels. The inner and outer skin will be alu-zinc to provide a corrosivity class C4. Access doors will be hinged/lift off design to suit the project. Doors will be fitted with locks, sight ports and bulkhead lights.

All removable panels will have a neoprene gasket to achieve a leakage rate to comply with L2(CEN B). Fans and motor are mounted on a steel skid and be complete with anti-vibration mounts.

The AHU's shall operate under automatic control and fault monitoring from the BMS system.

4.4.5 Local Heat Recovery Air Handling Units

The local heat recovery ventilation units, complete with attenuators, are to be ceiling void mounted within the area served with air intake/ discharge ducted to atmosphere via distribution ductwork and external weather louvres incorporated into the external envelope of the building.

The ventilation units shall be controlled and operated via the BMS system complete with air flow proving, filter condition monitoring and fault indication. Upon a fault being received an alarm will be generated on the BEMS front end.

Supply and extract distribution ductwork shall be routed within the ceiling void within the space to serve ducted diffusers and bellmouth terminals.

4.4.6 Local Supply Air Fans

The local supply air fans, complete with electric heater batteries and attenuators, are to be ceiling void mounted within the area served with air intake via distribution ductwork and external weather louvres incorporated into the external envelope of the building.

The ventilation units shall be controlled and operated via the BMS system complete with air flow proving, filter condition monitoring and fault indication. Upon a fault being received an alarm will be generated on the BEMS front end.

Supply distribution ductwork shall be routed within the ceiling void within the space to serve ducted diffusers.

4.4.7 Server Rooms Ventilation Systems

Mechanical supply and extract ventilation shall be provided within each server room via the central AHU or local AHU of the demise served to provide a minimum of 2 air changes per hour.

4.4.8 Lab Rooms Ventilation Systems

Mechanical supply and extract ventilation shall be provided within each Lab room via the central AHU of the demise served to provide the minimum flow rate required by the Lab room specialist (minimum 2ACH).

4.4.9 Biffa Workshop Vehicle Fumes Extract Ventilation System

The workshop area will be provided with a vehicle fume extract ventilation system.

Local Extract Ventilation will be provided in accordance with HSE guidance wherever necessary to safely control, remove and exhaust vehicular exhaust emissions during running of engines and particular workshop processes where applicable (locations to be confirmed).

Refer to specialist for further details.

4.4.10 Toilet Area Extract Ventilation System

Contaminated air shall be extracted via independent central twin centrifugal extract fan units complete with auto changeover control units and attenuators. Separate twin extract fans shall be provided to serve each demise. The extract fan serving the MCC Offices shall be located at high level within the ground floor plant room. The extract fan serving the Biffa Offices shall be located within the ceiling void of the demise served. The extract fans serving the gritter garage and gatehouse shall be located within the ceiling void of the respective area.

The extract ductwork installation shall be routed above the WC cubicles concealed within the ceiling with extract grilles provided over sources of foul/contaminated air such as W.C cubicles located centrally within ceiling tiles wherever possible.

All toilet extract fans shall discharge to atmosphere.

The toilet extract systems shall be time controlled via the BMS system complete with air flow proving and fault indication. The extract fans serving the gritter garage and gatehouse shall be locally controlled via the lighting circuit and be c/w 15 minute overrun timer.

4.4.11 Toilet Area Supply Ventilation System

Replacement air to the core toilet areas shall be provided from the general supply air ventilation system serving the open plan office areas via air transfer from the open plan office area into the lobby accessing the toilet areas. Appropriate air transfer paths shall be provided via ceiling mounted air transfer ducts and/or grilles from the lobby into each respective toilet area. Motorised fire/smoke dampers shall be provided as necessary in accordance with the fire strategy.

Make up air transfer into the accessible/ standalone toilet areas, cleaner's stores and kitchenettes shall be provided by undercutting doors where permissible to a maximum undercut as defined by the fire strategy and the Architect.

4.4.12 Other Ventilation

Plantrooms, switchrooms, motor rooms will be naturally or mechanically ventilated as necessary, stairs/lobbies will be naturally ventilated.

Ventilation within all areas is to comply with Building Regulations, CIBSE recommendations and British Standards and Codes of Practice.

4.4.13 Lift Shafts

The lift shafts will be provided with ventilation by the contractor in accordance with the requirements of BS EN81 and the lift manufacturer's specific requirements.

Any fire cladding of the lift shaft ventilation ducts required to maintain fire compartmentation shall also be provided by the contractor.

4.4.14 Supply & Extract Grilles and Diffusers

The contractor shall supply and install all grilles and diffusers throughout the building for general supply and extract ventilation, comfort heating/cooling purposes, mechanical extract and specialist ventilation systems.

Supply diffusers within the open plan office areas and cellular office areas shall be of the 4 way square perforated face type, mounted within the suspended ceiling. Return air shall be extracted through matching perforated face diffusers via return air bellmouth ductwork connections. The void above the suspended ceiling shall be used as a return air plenum.

Supply and extract diffusers serving the server rooms shall be square perforated face diffusers mounted within the suspended ceiling.

Extract within toilet areas, shower areas and cleaners stores shall be via ceiling mounted egg crate grilles or extract valves.

4.4.14.1 Grilles and Diffusers General Requirements

The positions of all grilles and diffusers must be fully co-ordinated with the architects ceiling layout. The grille/diffuser fixing method (lay in, clip in) shall be fully co-ordinated with the architects ceiling specification.

The air distribution pattern of the supply air diffusers shall ensure that full load heating and or cooling capacities can be introduced into the space to provide a complete mixing system at a suitable temperature without causing discomfort to the occupants.

All grilles and diffusers will be sized to achieve the required noise and velocity criteria contained within this specification and where required will incorporate blanking plates on the rear to achieve satisfactory air distribution in both heating and cooling modes to suit the final air flow rates determined during the Stage 4 technical design.

All supply and extract grilles and diffusers shall be complete with trimming dampers and matching insulated plenum boxes.

Grilles and diffusers shall be powder coated to a RAL and % gloss finish to match the Architect's specification.

The contractor shall ensure that all diffusers are suitable for installation within the ceiling construction. All grilles, diffusers and plenum boxes are independently supported/fixed at each corner to the building structure. Support via the suspended ceiling will not be permitted.

The contractor shall provide samples of the grilles and diffusers for the approval of the Client and Architect. Finishes and colours of all grilles and diffusers shall be agreed with the Architect.

All supply and extract grilles shall be complete with volume control dampers and be as manufactured by Gilberts (Blackpool) Ltd or equal and approved.

Contact: Jason Laugharne

E Mail: JasonLaugharne@gilbertsblackpool.com

Tel: 07464 547554

4.4.15 Fire Compartmentation

The contractor shall include for the provision of motorised fire/smoke dampers or fusible link thermal fire dampers within the ventilation distribution ductwork system to maintain the fire and smoke compartmentation of the building in accordance with the building fire strategy and Building Control requirements.

All fire/smoke dampers shall be CE Marked dampers, in accordance with BS EN 15650 and the installation shall be in accordance with the manufacturers tested installation methods.

All dampers shall fully comply with the product standards: EN 15650:2010, fire tested to EN1366-2, classified to EN 13501–3 and in accordance with HVCA Guide to Good Practice for the Installation of Fire & Smoke Dampers DW145.

The contractor shall also include for the provision of fire and smoke separation of ceiling void return air plenums (where provided) in accordance with the building fire strategy and Building Control requirements.

In accordance with BS EN 1366-2, a minimum of 200mm separation shall be provided between fire dampers installed in separate ducts. A minimum of 75mm between fire damper and a construction element (wall/floor) shall be provided – e.g., for a damper in a wall, this is the distance between the damper casing (largest dimension) mounted in the supporting construction and a wall or floor adjacent to that supporting construction.

The contractor shall not rely on the concept layout drawings provided for quantities and positions of fire and fire/smoke dampers.

The fire/smoke dampers shall be as manufactured by Actionair or equal and approved.

4.4.16 Attenuation

The contractor shall include for all attenuation and acoustic insulation measures as required to ensure the noise criteria for any treated spaces and their adjacent spaces are met and external noise criteria is not exceeded.

4.4.17 Cross Talk Attenuation

Cross talk attenuation shall be provided within the ventilation ductwork installation where required to prevent noise transfer between the spaces.

4.4.18 Ventilation of Specialist Equipment Rooms

Ventilation (natural or mechanical) of specialist equipment rooms as detailed below will be provided in accordance with the recommended standards and the requirements of Building Control and the Fire Officer.

- Transformer Rooms

Natural ventilation strategies shall be adopted where possible. Where mechanical ventilation is required this shall be provided on an N+1 basis where the operation of the ventilation system is critical to the area served.

All mechanical ventilation systems serving specialist equipment rooms shall be time controlled via the BEMS system to run continuously complete with air flow proving and fault indication.

4.4.19 Other Ventilation

Plantrooms and switchrooms will be naturally or mechanically ventilated as necessary, stairs/lobbies will be naturally ventilated.

Ventilation within all areas is to comply with Building Regulations, CIBSE recommendations and British Standards and Codes of Practice.

4.4.20 Access

Access doors shall be provided and located to enable cleaning/inspection of all fire dampers, volume control dampers, heater batteries, bends, branches and on straight lengths of ductwork at not more than 9 metre intervals.

Access doors shall be provided to satisfy all cleaning and access requirements as detailed within DW/144 and TR/19 Section 3, Table 2.

4.4.21 Thermal Insulation

All supply and extract air ventilation services in ducts, ceiling voids, risers and unheated areas will be thermally insulated. The secondary supply air ductwork from the VRF units shall also be insulated via rigid circular phenolic ductwork insulation.

Local mechanical extract ventilation systems will not be insulated unless there is a risk of condensation forming on the ductwork.

Kingspan Kooltherm FM duct insulation will be the specific material for all ventilation services. All insulation will be supplied by Kingspan, PO Box 3, Charlestown, Glossop, Derbyshire SK13 8LE or equal and approved.

All supply and extract ductwork routed externally shall be weatherproofed and aluminium clad.

4.4.22 Volume Control Dampers

Volume control dampers shall be installed within all supply and extract ductwork to facilitate commissioning and balancing of the air flow rates.

Volume control dampers up to and including 300mm diameter shall be single blade type.

Volume control dampers above 300mm diameter shall be multi blade type.

Volume control dampers for rectangular ductwork shall be stainless steel aerofoil type.

Volume control dampers for circular ductwork shall be opposed blade stainless steel aerofoil type.

4.4.23 Identification of Ventilation Services

The contractor shall ensure all ductwork is clearly identified in accordance with the requirements of BS: 1710.

All ductwork shall have self-coloured, self-adhesive PVC tape bands bonded to the duct or in the case of insulated or fire clad ducts, to the insulated finish. These labels shall be white self-adhesive PVC 300mm wide x 150mm high. Each label shall have 25mm high black lettering denoting the nature of the ducted system and area served and shall be complete with airflow direction arrows.

4.4.24 External Supply / Exhaust Terminations

The main contractor shall supply and install all supply/exhaust inlets and outlets including weather louvres associated with the mechanical services installations.

The type, location and finish of air intake and discharge terminations shall be all agreed with the Architect prior to installation.

4.4.25 Design Criteria

The design of the mechanical engineering services will comply with current British Standards, Codes of Practice and CIBSE Design Guides. requirements for the ventilation systems are as detailed below;

4.4.25.1 Ventilation Rates

Open plan office ventilation rate is to be based on 10l/s/Person @ 1-Person / 8m² based on Office NIA. The MCC Office shall be based on a minimum of 200 occupants.

Refer to ventilation strategy drawings for other design ventilation rates.

4.4.25.2 Noise Criteria

Cellular Office	-	NR35
Open Plan Office	-	NR38
Lab Rooms	-	NR40
Stairs & Circulation Areas	-	NR40
Reception Desk Area	-	NR40
Eating and Dining Areas	-	NR40
Kitchenette / Tea Point	-	NR40
Workshop	-	NR45
Toilet Areas	-	NR45
Cleaners Store	-	NR45
Post Room	-	NR45
Showers & Changing Rooms	-	NR45
Stores	-	NR55
Plant Noise Breakout	-	Controlled to meet local planning and environmental authority requirements as detailed in the acoustic report.
Vibration Control	-	Vibration transfer from building services plant to internal areas will not be more than 0.01 m/s2 peak acceleration (based on Wb weighting, as defined in Clause 3.3 of BS 6472-1: 2008).

4.4.25.3 Velocities

Riser duct (NR35)	-	7.5 m/s
Main branch (NR35)	-	5.0 m/s
Diffuser/louvre face (NR35)	-	2.5 m/s
Riser duct (NR40)	-	9.0 m/s
Main branch (NR40)	-	6.0 m/s
Diffuser/louvre face (NR40)	-	3.0 m/s
Within rooms at working plane	-	0.2 m/s

4.4.25.4 Ductwork Pressure Drops

Low velocity ductwork	-	1.0 Pa/m
High velocity ductwork	-	8.0 Pa/m

Pressure drops indicated are for guidance only.

Care should be taken with the sizing of fans with regards to specific fan powers and noise.

4.4.25.5 Ductwork Specification

Rectangular	-	Galvanized Steel to DW 144 Part 3 sections 9 and 10 with fittings to section 11. BS EN 1505
Circular	-	Galvanized Steel to DW 144 Part 4 sections 12 and 13 with fittings to section 14. BS EN 1506 and BS EN 12237.

4.5 Domestic Hot & Cold Water Services

4.5.1 Scope & Objectives

The design, installation and testing of the domestic hot and cold water services shall comply with the requirements of the Water Supply (Water Fittings) Regulations 1999 and the local water company representative. All parts of the installation shall comply with ACOP (L8), BS EN 806, CIBSE TM13 and any other appropriate British Standards, Codes of Practice and Health and Safety documents.

The contractor shall be responsible for liaising with the local water company to determine their requirements and to ensure that they are incorporated into all relevant installations.

4.5.2 Potable Cold Water Services

The contractor shall carry out a peak flow rate calculation to determine the maximum water demand for the building and provide all relevant information to the main contractor to enable the new water supply connection to be procured and installed.

The preference is for a direct, mains fed service, provided that there is sufficient availability and site pressure. Due consultation shall be made with the local water authority to ascertain the long term site pressure and any particular storage obligations if applicable.

The contractor shall supply and install new below ground incoming mains water supplies from the boundary connection points to the building entry positions. The pipework material shall be suitable for the ground conditions and barrier pipework (Protecta-line) will be provided if deemed necessary.

The incoming domestic mains cold water supplies shall have sufficient capacity to serve the development.

A main isolating valve, double check valve and drain valve shall be installed on the incoming main at the point of entry to the building in full compliance with the Water Supply Regulations and the requirements of the local water company.

The contractor shall provide a secondary pulsed output water meter on the incoming mains cold water supply at the point of entry into the building linked to the BMS system. This meter shall be separate to the utility companies' external boundary meter and shall be used in conjunction with appropriate software programming of the BMS system to identify leakage on the incoming mains supply and internally within the building. In the event of water leakage being detected an appropriate alarm shall be raised on the BMS system.

The mains cold water supply shall be routed throughout the building to serve all appliances.

Pressure reducing valves shall be provided on branch connections where necessary to ensure that a maximum water pressure of 0.2 bar at the outlets is not exceeded.

Solenoid valves will be installed on the cold water supplies to each toilet and shower area and the flow of water through that supply shall be controlled by a PIR detector. The PIR detector and the associated wiring shall form part of the lighting control circuit.

4.5.3 Fluid Category 5 Cold Water Booster Set – MCC Bin Store & Relocated Bin Wash

A BMCW outlet point shall be provided in the MCC Bin Store area. The water outlet point shall terminate with a wall mounted bib tap and shall be provided with an isolation valve, drain off point and be complete with all necessary backflow devices.

The water points shall be served from a dedicated 'Category 5' packaged booster set and break tank incorporating the required air break in accordance with the Water Supply Regulations. The packaged booster set is to be located within the ground floor plant room.

All bib taps are to be lockable to prevent unauthorised usage.

The existing bin wash facility located at the North end of the site, is to be relocated closer to the MCC Bin Store. The existing system is to be reused and fed from a new CAT 5 supply.

4.5.4 Fluid Category 5 Cold Water Booster Set & Water Storage Tank – Vehicle Wash Down Facilities

There is a requirement for vehicle wash down facilities to be provided to service the operational vehicles which use the site. A minimum of 6nr outlets shall be provided. 1nr of these outlets shall provide hot water. This shall be provided via a RhinoWash (or similar) hot pressure washer unit. Current allowance for the RhinoWash unit are 15mm, 0.3 l/s supply. The remaining 5nr outlets shall be fed from a dedicated 'Category 5' booster set and cold water storage tank incorporating the required air break in accordance with the Water Supply Regulations. The cold water storage tank shall be sized so that all outlets are able to operate simultaneously. Each water outlet shall be provided with an isolation valve, drain off point and be complete with all necessary backflow devices. All water outlets are to be lockable to prevent unauthorised usage.

The booster set and cold water storage tank are to be located adjacent to the vehicle wash down facility. Final location to be agreed.

Booster pump-sets of sufficient duty shall be incorporated to provide the requisite outlet pressure (to be confirmed by MCC). Sufficient resilience/standby shall be incorporated in the booster set to ensure continuity of service in the event of failure of a pump. Water usage for the vehicle wash down shall be separately metered. Refer to MCC's Employers Requirements for further details.

4.5.5 Bulk Liquid De-Icing Unit

There is a requirement for a bulk liquid de-icing unit to be provided as part of the grit storage facilities. Refer to MCC's Employers Requirements for further details.

4.5.6 Fuel Storage and Pumps

There is a requirement for a fuel storage and pumps facility to be provided to service the operational vehicles which use the site. Volumes for diesel, petrol and oil storage will be confirmed by MCC. Refer to MCC's Employers Requirements for further details.

4.5.7 Laboratories

There is a requirement for a number of the lab rooms to be provided with a water supply and de-ionising equipment. Refer to MCC's Employers Requirements for further details.

4.5.8 Hot Water Services

Domestic hot water shall be provided throughout the development via local electric hot water heaters.

Each heater will be of the un-vented type with a capacity to suit the number of appliances served (minimum storage 5 litres per wash hand basin, 15 litres per kitchen sink and 30 litres per cleaners sink). The heater shall be complete with all necessary safety devices, expansion vessels, pressure temperature relief valves etc. The hot water heaters will be located so they are readily accessible in a position to be agreed with the Architect and Client.

The design of the water services pipework serving the heaters shall be installed as the manufacturer's recommendations for thermal expansion and water pressures.

The design of the hot water installation shall make due allowance for the prevention of injury due to excess hot water temperature by the provision of local blending valves. The hot water supply shall be blended to a safe discharge temperature via local blending valves wherever necessary. Each wash hand basin will be provided with a mixed (43oC) water supply via a local thermostatic blending valve and a cold water supply where required.

The hot water generated by each hot water heater shall be distributed to serve all appliances via copper pipework.

Pressure reducing valves shall be provided on branch connections where necessary to ensure that a maximum water pressure of 0.2 bar at the outlets is not exceeded.

All hot water services distribution pipework shall be insulated including where routed within ceiling voids, service risers, etc. to minimise heat loss from the pipework.

A Zip water boiler is to be provided within the Food Prep area of the MCC Offices. Final requirements are to be confirmed by MCC.

4.5.9 Electric Showers

Wall mounted electric showers shall be provided as indicated on the indicative tender drawings. Each shower unit shall be rated at a minimum of 9.5 kW.

4.5.10 Thermostatic Mixing Valves

The design of the hot water installation shall make due allowance for the prevention of injury due to very hot water temperature by the provision of local thermostatic mixing valves. The design shall incorporate measures to minimise the risk of legionella growth in strict accordance with good practice.

Each wash basin will be provided with a mixed (41°C) water supply via a local thermostatic blending valve and a cold water supply.

Hot water supplies to cleaner's stores will be provided at 60°C and suitable fixed warning notices clearly labelled as 'Very Hot Water' shall be mounted local to the hot water outlet.

All thermostatic mixing valves shall meet the requirements of the TMV 3 scheme and be WRAS approved incorporating low loss check valves, isolation valves and strainers on the inlet and discharge pipework connections.

Water temperature test points shall be provided on the outlet pipework connection from the thermostatic mixing valves in an accessible location to enable testing to be carried out.

Thermostatic shower mixing valves will be provided to the showers.

4.5.11 Flow Regulators

Where excessive supply pressure would otherwise result in increased water usage, flow regulators shall be provided to appliances/outlets. Flow regulators shall be selected to suit the system type and available pressure.

4.5.12 Metering

Pulsed output flow measuring meters and the associated sensing and BMS connection shall be provided on the hot and cold water services distribution system to allow monitoring and recording of water usage as generally detailed below:-

The water distribution systems will be metered at the point at which the supplies enter the site and sub-metered as follows:-

- MCC Offices
- Biffa Offices & Biffa Workshop
- Sublet Area (capped and isolated supply, meter to be provided as part of fit-out)
- Additional Sublet Area (capped and isolated supply, meter to be provided as part of fit-out)
- MCC Bin Store & Bin Wash (CAT 5 System)
- Gatehouse
- Gritter Garage
- External Wash Down Area

All sub-meters must report to the BMS system and be located in an easily accessible location.

4.5.13 Water Treatment

Post completion of the installation, the entire hot and cold water distribution system inclusive of the incoming mains cold water supply from the boundary connection point shall be fully flushed and disinfected in accordance with BS EN 806, The Water Supply Regulations and the local water supply company/authority requirements.

The contractor shall include for chlorination up to and including the final connection to any items of specialist equipment, this shall include any additional visits required to the site in order to complete the works.

The contractor shall carry out purity tests from water samples and obtain laboratory analysis to ensure compliance with the Water Supply (Water Quality) Regulations. All samples shall include tests for Legionella bacteria. The contractor shall repeat disinfection and purity analysis until appropriate quality is achieved. Analysis shall be repeated on a seven-day cycle until handover to the Employer.

4.5.14 Thermal Insulation of Pipework

All hot and cold water pipework in ducts, ceiling voids, risers and unheated areas will be insulated with Kooltherm FM preformed pipe insulation with factory applied aluminium foil as manufactured by Kingspan.

As a minimum, the thermal insulation shall comply with the more onerous of BS: 5422:2009, Building Regulations Approved Document L and BREEAM requirements.

4.5.15 Final Connections

Water services will terminate with individual valved connections to each sanitary appliance and item of equipment. The contract includes the final connections to all appliances and items of equipment.

4.5.16 Concealment of Pipework

Wherever possible all domestic water services shall be concealed within ducts, boxings or in the suspended ceiling void. Where services are routed exposed they shall be chromium plated in accordance with BS EN 12540:2000.

The contractor shall take great care when soldering capillary joints. The contractor shall follow the manufacturer's recommendations when making joints. Any tarnished, scored, scratched or marked joint will be rejected, and replaced at the contractor's expense.

4.5.17 Identification of Pipework Services

The contractor shall ensure all domestic hot and cold water services are clearly identified in accordance with the requirements of BS: 1710.

4.5.18 Trace Heating System

All piped services routed within unheated areas of the building shall be insulated and trace heated for frost protection purposes via self-regulating trace heating tape controlled from a local central panel located within the ground floor plant room.

The trace heating system is to be provided as follows:-

- Manufacturer: Rachem
- Maintenance Temperature: 5oC
- All frost protection trace heating circuits shall be controlled and monitored via an on-line sensing thermostat.
- Thermostat - RAYSTAT-ECO -10 Smart Thermostat

The controller must have the following functions;

- Adjustable Hysteresis
- High and low temperature alarm function

- Digital display
- Capacity for “Off-site” programming without external power supply.
- 25 amp switching capacity rating.
- Sensor failure alarm
- Voltage failure alarm
- Selectable fail safe mode, either ON or OFF
- Alarm relay for remote BMS monitoring
- System error codes for quick diagnostic of system failure.

The trace heating system will be connected to the BMS system for common fault monitoring.

4.5.18.1 Compressed Air System

Compressed air installations will be provided to suit the specific requirements of Biffa. Sufficient resilience/standby will be incorporated in the compressor receiver arrangement (duplex) to ensure continuity of service in the event of failure of a compressor and to allow testing and servicing.

4.5.19 Design Criteria

The design of the mechanical engineering services will comply with current British Standards, Codes of Practice and CIBSE Design Guides. requirements for the domestic hot and cold water services are as detailed below;

4.5.19.1 Hot Water Temperatures

Wash hand basin outlet	-	41°C
Cleaners sink outlet	-	60°C

4.5.19.2 Pipework Velocity

Small bore pipework	-	1.00 m/s max
15 – 50mm diameter	-	1.25 m/s max
50mm diameter and above	-	1.50 m/s max

4.5.19.3 Pipework Pressure Drops

Pipework	-	400 Pa/m run max

Pressure drops indicated are for guidance only.

Care should be taken with the sizing of pumps with regards to running cost and noise.

4.5.19.4 Pipework Specification

Mains cold water	-	Copper – Table X BS EN 1057
Mains cold water	-	Copper – Table X BS EN 1057
Tank cold water	-	Copper – Table X BS EN 1057
Cold water below ground	-	Medium Density Polyethylene BS EN 12201-2 (Protecta-Line)
Domestic hot water flow	-	Copper – Table X BS EN 1057
Domestic hot water return	-	Copper – Table X BS EN 1057

4.6 Natural Gas Service

4.6.1 Scope & Objectives

The contractor shall design, supply, install, set to work, test and commission a complete natural gas installation including all plant, distribution equipment and controls to provide a safe and fully operational system.

All operatives involved in any part of the natural gas installation shall be Gas Safe registered, current at all times during the installation. All operatives shall be licensed to undertake the specific category of work with which they are involved. The installation, materials, workmanship and testing of gas mains and appliances shall be carried out in accordance with all Local Authority requirements, Codes of Practice, British Standards, European Standards, Gas Safety Regulations and industry guidance.

4.6.2 System Description

An existing gas service enters the building within the corner of the existing Plating Shed and is currently routed within the building to serve the existing gas fired radiant heating system within the adjacent workshop area. The existing gas pipework shall be reconfigured to serve the existing gas fired heating system within the plating shed only, whilst Biffa occupy this space.

Temporary gas fired radiant heating has recently been installed within the workshop area and is to be reused and extended / modified where required to serve the new workshop facilities. This heating system shall be fed from a new gas supply, which enters the building at the opposite end. The new supply shall be sized to serve the entire building (excluding the plating shed).

As a minimum, the contractor shall provide a gas solenoid valve complete with emergency gas isolation push button at the point of entry into the building. Each automatic gas shut off valve shall be linked to the building fire alarm system and the BMS system.

Each gas shut off valve will shut automatically and isolate the incoming gas supply under the following conditions:

- Activation of automatic fire detection system
- Manual activation of emergency push button

Any further requirements for automatic gas shut off are to be provided in accordance with the Building Control Officer requirements.

4.6.3 Control Requirements

The gas supply shall be interlocked with the building fire alarm system and BMS system to provide automatic shut down in the event of activation of the fire alarm system or operation of manual gas isolation emergency push buttons.

Gas solenoid valves shall be provided on the gas intake pipework and shall be hard wired with emergency push buttons located at the gas intake locations and within the Biffa Workshop, MCC bin store, plantroom and sublet areas.

The operation of the gas safety shut off valves under fire conditions shall be agreed with the electrical contractor and fire-officer as part of the fire alarm systems cause and effect strategy in order to minimise disruption to the building in the event of false alarms.

4.6.4 Sub Metering

Pulsed output sub meters and the associated sensing and BMS connection shall be provided to all gas fired plant/appliances to allow monitoring and recording of gas usage as detailed below.

The gas distribution system will be metered at the point at which the supply enters the site and sub-metered as follows:-

- Biffa Workshop
- MCC Bin Store (separate existing meter at point of entry to the building)

- Sublet Area (capped and isolated supply, meter to be provided as part of fit-out)
- Additional Sublet Area (capped and isolated supply, meter to be provided as part of fit-out)

All sub-meters must report to the BMS system and be located in an easily accessible location.

4.6.5 Pipework

Internal gas pipework shall generally be mild steel (heavy grade) and be fully welded.

The gas pipework shall be painted Yellow Ochre to BS 08 C35 and clearly identified in accordance with the requirements of BS: 1710.

All gas pipework routes shall be naturally ventilated throughout in accordance with BS8313 and the Gas Safety Regulations. The contractor shall include for the installation of ducts (fire rated where required) to ventilate the route of the gas pipework including the associated riser.

4.7 Automatic Controls System

4.7.1 Scope & Objectives

The Contractor shall design, supply, install, test and commission a fully automatic Trend Building Energy Management System to operate, control, energy manage, and monitor the plant as specified.

The controls system will be designed and installed in accordance with **Manchester City Council's 'Standard Specification for Building Services Automatic Controls' document.** The automatic control system shall be open protocol.

It is also proposed that the BMS system is used for time control of lighting and reporting of faults on emergency lighting.

The system will incorporate the facility for remote access/adjustment and for monitoring system faults and failures of all mechanical plant and equipment.

The controls installation shall be fully designed, installed and commissioned by;

Eco-i Ltd

3rd Floor

No.1 Mann Island

Liverpool

L3 1BP

Mr Chris Roscoe

Email: chris.roscoe@eco-igroup.com

Mobile: 07590 880795

4.7.2 Energy Metering

Utility metering is to be provided on the incoming gas and water supplies.

Sub-metering is to be installed as required by the building regulations and recommended by the guidance given in CIBSE Technical Memorandum TM39: Building Energy Metering (a guide to energy sub-metering in non-domestic buildings).

Its purpose shall be to control and monitor all mechanical building services in a way, which makes effective use of available energy and manpower resource. The BMS controllers shall be BACnet "Open" protocol communications.

Install shall include all associated power and control wiring and containment from the main HVAC control panels.

The panels shall be linked to a BMS front end supervisor, which shall monitor all plant conditions, raise audible alarms and will provide all the necessary interfaces with the fire alarm system.

Outstations providing standalone direct digital controls shall be installed for the main systems in the mechanical BMS (ELV) control panels. A separate distribution board & breakers shall power all mechanical service plant items. Outstation controllers shall be networked by the controls specialist. BMS control panels shall contain at least 25 % spare capacity.

The automatic controls shall comply with the requirements of CIBSE Guide H for the control philosophy, installation and commissioning.

4.7.3 BMS Networking & Structure

A specialist data package is to be provided by the electrical contractor. Provision shall be allowed for within the data package for the following connections.

- Front End PC Supervisor
- Controls Panels

IT equipment shall be installed by the data specialist under the data package. The controls specialist shall liaise with the data specialist to provide a fully working system.

The controls specialist will provide the BMS and software.

The BMS Specialist shall provide all BMS software and graphics. The BMS contractor shall ensure all pages are designed and log in details are configured to allow future tenants access to the HVAC services serving their area only.

The system will provide graphic user interfaces for each system and floor plate with user friendly set point adjustment. The controls specialist shall allow for producing full graphics for all controlled monitored systems and integrating the points and graphics into the network supervisor.

The head end shall be capable of working on a Windows tablet such as the IE Dell or Microsoft Surface (or any other manufacturer who incorporates Windows OS). The head end must be capable of allowing the users access to the alarms and access the browser for data points via an IOS or Android smart phone. The user must be able to override the data points and make set point changes via the mobile device.

Controllers and monitoring sensors shall either be located on columns, core area walls, or the suspended ceiling as appropriate. All control cabling shall be concealed. All controllers are to be mounted at a height compliant with Building Regulations Approved Document M.

A remote alarm indication panel shall be provided by the controls specialist which shall be provided, final location to be agreed. The alarm indication panel shall contain 1No common fault lamps. A mute button and audible alarm shall also be provided on the panel.

Controls shall be designed and installed to meet BS 7671, the IEE Wiring Regulations and meet the requirements of Part L2A of the Building Regulations for the controls philosophy.

4.7.4 BMS Points Schedule

The contractor shall produce a points schedule at tender stage within their proposal.

As a minimum, the BMS system shall control and monitor the following plant:-

- VRF Systems
- DX Split Systems
- Gas Fired Radiant Heating Systems
- Electric Panel Heaters
- Lab Room MEP Systems
- Overdoor Air Curtains
- Server Room MEP Systems
- Gatehouse MEP Systems
- Gritter Garage MEP Systems
- Supply and extract ventilation systems
- Electric Heater Batteries
- Extract ventilation system
- Vehicle Fume Extract System
- Fire/Smoke Damper Control System

- Local Electric Hot Water Heaters
- Fluid Category 5 Cold water booster sets
- Vehicle Wash Down Facilities
- Compressed Air System
- Petrol Interceptor(s)
- Trace heating systems
- Gas & water meters including main and sub meters
- Electrical metering including main and sub meters
- Heating energy metering
- Automatic monitoring & targeting software
- Gas solenoid valves
- Fire alarm system

4.7.5 VRF Fan Coil Units

Each VRF unit shall be individually controlled via the BMS system. The VRF systems shall be networked together via the AE 200 interface units.

The Mitsubishi AE 200 central controllers shall communicate with the BMS system via suitable Mitsubishi/ Trend/Procon/XNC controller interface units which are to be provided by the air conditioning contractor to provide full control and diagnostics of each indoor VRF unit via the BEMS.

The BMS system shall have the capabilities to monitor, alter set points and enable the VRF indoor units individually. The information retrieved is then relayed back and integrated onto the supervisor, as part of the BMS system.

The BMS system will provide frost protection within the building via operation of the VRF systems.

Filter condition indication for each indoor VRF unit shall also be monitored/provided by the BMS system.

Enable signals to the VRF systems shall be software sequenced via the BMS system to give a staggered start and minimise the simultaneous starting current.

The BMS shall provide optimised start/stop of each tenant area using the BMS space temperature sensors. (Minimum 2No per tenancy area). Each VRF unit shall be provided with a BMS graphic on the front end PC whereby the status of the following shall be displayed.

- Unit Fault Status
- Unit Run Status
- Unit Temperature
- Set point
- Enable/Disabled

4.7.6 Server Room DX Cooling Systems

The BMS shall monitor each unit for a fault condition and a common alarm indicated on the front end supervisor in the event of a fault condition.

The BMS shall also monitor the room temperature using a BMS space temperature sensor. The sensor shall be set up to provide a high temperature alarm status.

4.7.7 DX Split Cooling Systems

Each DX split cooling system shall be compatible with and be connected to the BMS system to enable the system and monitor for a common fault. Upon a fault being detected an alarm will be generated on the BMS front end PC.

4.7.8 Lab Rooms Air Conditioning Systems

The BMS shall monitor each air conditioning unit for a fault condition and a common alarm indicated on the front end supervisor in the event of a fault condition.

The BMS shall monitor the room temperature using a BMS space temperature sensor. The sensor shall be set up to provide a high temperature alarm status. The BMS shall also monitor the room humidity levels with appropriate alarms.

4.7.9 Overdoor Air Curtains

Each air curtain shall be controlled from the BMS system and be complete with a frequency invertor for variable fan speed regulation, integral controls, temperature sensors and a remote control facility.

4.7.10 Electric Panel Heaters

Electric panel heaters are to be provided within the areas of the building not served by the VRF heating/cooling systems.

The panel heaters are to operate to their own integral thermostats during occupancy. The electrical contractor shall provide the power supply to the heaters via local contactor controlled circuits. The BMS system shall time switch the contactors on/off to suit building occupancy.

Frost protection shall also be provided via operation of the electric heaters activated by the BMS subject to the dictates of local wall mounted temperature sensors within the areas provided with electric heating.

4.7.11 Central Ventilation Air Handling Plant

The central air handling plant shall be controlled to provide treated air into the open plan office areas of the building. The supply and extract air volume delivered by the central roof mounted air handling plant shall be controlled to reflect the air volume requirements of the occupied areas of the building dictated by the occupancy time programmes via control of the invertor driven AHU fan motors and motorised branch ductwork dampers. It is proposed that, where appropriate, CO2 sensing is utilised to vary the ventilation flow rates according to the occupation and optimise energy usage.

The central mechanical supply and extract ventilation system(s) will also be controlled so that fresh air distribution to each demise and extract from each demise of the building can be isolated during non-occupied periods.

Each AHU shall be controlled upon demand from individual time programmes.

The AHUs supply and extract fans are provided with Hand/Off/Auto switches on the control panel fascia.

When selected to:-

Hand: The AHU will operate at a prefixed speed programme within the inverter drive; all hard wired interlocks will be present during hand operation.

Off: The AHU will be disabled. Note: frost protection does not override the “off” position.

Auto: The AHU will operate to the dictates of the BMS.

When enabled, the AHU inlet and extract dampers will open. Once an open status of each damper is acknowledged by the control panel the fans will begin to ramp up to their selected pressure set points. The fan speed will modulate to maintain the supply and return air pressure set points as sensed by the supply & return air pressure sensors.

Each fan motor is provided with inverter controlled drives. The inverters are controlled via the BMS system as detailed above. Each inverter shall be monitored for a fault status at the control panel. A lamp is provided on the control panel to indicate the fault status. Upon a fault being received an alarm will be generated on the BMS front end PC.

Each fan motor is provided with an air differential pressure switch. If the relevant fan motor fails to start within 60 seconds of being enabled then an alarm will be acknowledged within the software. A lamp is provided on the control panel to indicate the air flow failed status. Upon a fault being detected an alarm will be sent to the BMS front end PC.

Each supply AHU consists of:-

- Motorised inlet damper – where a damper actuator is provided with end switches to prove the actuator is open.
- Pre Filter & Bag Filter sections – where differential pressure switches are to be provided.
- Heat recovery thermal wheel - BMS modulating control and fault status.
- Heating Coil
- Supply Fan – where a variable speed inverter is provided and differential pressure switch along with pressure sensors to control fan speed.

The extract AHU consists of:-

- Heat recovery thermal wheel
- Extract Fan – where a variable speed inverter is provided and differential pressure switch along with pressure sensors to control fan speed.
- Motorised discharge damper – where a damper actuator is provided with end switches to prove the actuator is open.

.AHU Filter Monitoring

Each AHU filter is to be monitored for a dirty status via a differential pressure switch. A lamp shall be provided on the control panel to indicate the dirty status. Upon a dirty status being received an alarm will be sent to the BMS front end PC.

Ventilation Supply Air Control

Each AHU will operate to provide a fixed supply air temperature set point as sensed by the supply air temperature sensor. The AHU will utilise the thermal wheel for heat & cool recovery as dictated by the return air temperature sensors against the outside air temperature sensor.

If the thermal wheel is insufficient in raising the air temperature to set point then the heating coil (heating mode) will modulate to maintain the supply air set point.

Pressure sensors shall be provided within the supply and extract ductwork to speed control the AHU fans dependent on the zone damper positions.

Zone Damper Controls

Each office floor/zone shall be provided with BMS controlled modulating zone dampers.

The dampers shall be enabled upon fixed occupancy start/stop time programmes as controlled by the BMS. Each damper shall provide position status via the use of end travel switches back to the BMS.

4.7.12 Toilet Extract Ventilation System

The toilet extract ventilation system shall incorporate a central extract fan unit incorporating run and standby fans and integral auto change over controller.

The fan unit shall be fed from a local BMS control panel and will be enabled via a fixed time signal and monitored by the BMS system. In the event of fan failure or change over fault an alarm shall be displayed on the BMS front end PC.

Zone Damper Controls

The dampers shall be enabled upon fixed occupancy start/stop time programmes for the floor served as controlled by the BMS. Each damper shall provide position status via the use of end travel switches back to the BMS.

4.7.13 General Heat Recovery Ventilation Units

The heat recovery units shall be controlled via the BMS system controlled upon demand from a time programme.

The unit shall be provided with Hand/Off/Auto switch on the control panel fascia.

When selected to:-

Hand: The unit will operate at a prefixed speed programme within the inverter drive; all hard wired interlocks will be present during hand operation.

Off: The unit will be disabled. Note: frost protection does not override the “off” position.

Auto: The unit will operate to the dictates of the BMS.

The unit shall be monitored for a fault status at the control panel. A lamp is provided on the control panel to indicate the fault status. Upon a fault being received an alarm will be generated on the BMS front end PC.

In the event of fan failure or change over fault an alarm shall be displayed on the BMS front end PC.

4.7.14 Local Supply Ventilation Units

The local supply ventilation units serving the Male & Female Shower/Changing areas within the Biffa Offices shall be controlled via the BMS system to operate upon demand from a time programme.

The unit shall be monitored for a fault status at the control panel. Upon a fault being received an alarm will be generated on the BMS front end PC.

4.7.15 Main Plant Monitoring

- Outside Air Temperature
- AHU Supply Temperature
- AHU Supply Pressure
- AHU Return Pressure
- AHU Return Temperature
- Gas, Water, Heat and Electric Metering
- All motor faults/Trip status
- Water & Air Flow Failure using differential pressure switches
- Status of all alarm conditions of connected plant.
- Filter dirty status alarm
- AHU frost protection alarm
- VRF Interface
- Fire alarm system

4.7.16 Fluid Category 5 Cold Water Booster Sets

Each packaged water booster set shall be monitored by the BMS system and a common alarm indicated on the front end supervisor in the event of a fault condition.

4.7.17 Domestic Hot Water Heaters

The local electric hot water generators shall be powered, enabled and monitored for a fault status at the BMS.

4.7.18 Vehicle Wash Down Facilities

The vehicle wash down facilities shall be monitored for status and fault conditions.

4.7.19 Compressed Air System

The compressed air system shall be monitored for status and fault conditions.

4.7.20 Vehicle Fume Extract System

The vehicle fume extract system shall be monitored for status and fault conditions.

4.7.21 Petrol Interceptor(s)

Below ground ducts will be provided to petrol interceptors complete with power supplies and connections to the automatic controls system.

4.7.22 Trace Heating Systems

The trace heating systems shall be monitored by the BMS system and a common alarm indicated on the BMS front end PC in the event of a fault condition.

4.7.23 Water Leak Detection System

The boundary meter and intake meter to the building shall be connected to the BMS. The BMS shall provide leak detection software to determine if there is a water leak. In the event of a leak an alarm shall be visible on the front end PC and control panel fascia.

4.7.24 Energy Metering

The buildings gas, water and electrical supplies shall be metered and sub metered to comply with Building Regulations Approved Document L2A.

Electric Meters

All electric meters shall be connected to the BMS using Modbus communications. This shall include an interface to the VRF electric metering system.

Water Meters

The boundary and internal sub meters are to be connected by a pulsed output signal to the BMS.

Gas Meters

The boundary and internal sub meters are to be connected by a pulsed output signal to the BMS.

Energy Meters

All heating energy meters shall be connected to the BMS using Modbus communications.

4.7.25 Energy Consumption Automatic Monitoring & Targeting Software (AM&T)

The BMS shall monitor and log a number of parameters associated with the building services plant, equipment and systems including but not limited to temperature/load profiles, hours run indication and direct metered consumption.

The BMS shall provide energy usage profiles for but not limited to the following:-

- Energy & Demand
- Specific Energy
- Energy Use
- Total Consumption

Using stored and collected data the control specialist shall configure the BMS system via the production and implementation of graphics, log databases to correlate/calculate all of the specified data from the building as a whole or in subdivided areas and produce a report in a tabular and graphical format.

The BMS shall allow users to view the features mentioned above, there shall be predetermined access levels for each individual user to carry out the following:-

- View Reports
- Read Databases
- Amend Reports
- Create Reports
- Amend Databases

The energy monitoring systems as a whole shall fully comply with BREEAM requirements for energy monitoring.

The controls specialist shall allow within their price to provide, configure, commission and client training of the system.

4.7.26 Automatic Gas Shut Off Valves

An automatic gas safety shut off valve shall be provided on the incoming gas supply positioned on the outlet of the gas meter within the gas intake room. If activated, this valve shall isolate the incoming gas supply at the entry point.

The automatic gas shut off valve shall be interlinked with the main fire alarm panel via an interface provided by the electrical contractor.

Adjacent to the entry/exit door in the gas intake room an emergency stop button shall be provided. If the button is pressed then the gas valve shall close.

In the event of activation of the gas shut off valve an indicator lamp on the HVAC control panel shall illuminate and generate an alarm on the BMS front end PC.

Emergency push buttons located at the gas intake locations and within the Biffa Workshop, MCC bin store, plantroom and sublet areas shall also be provided.

4.7.27 Control & Power Wiring

All power & control wiring to all mechanical plant, equipment controllers, and sensors shall be supplied and installed by the control specialist.

Details of the requirements for mechanical services power supplies shall be provided by the mechanical contractor during the tender period in sufficient time to allow the relevant costs to be included within the electrical tender.

All wiring will be provided with OHLS sheathed cabling installed within a galvanised conduit containment system, which shall be provided in accordance with spacing requirement of the IEE Regulations.

4.7.28 Time Control

The BMS will incorporate a real-time clock and calendar, which runs continuously. The BMS will provide schedules that can be programmed to define when an operation signal is to be sent to the controlled plant.

This will allow different building/plant control strategies to be defined for out-of-occupancy periods, weekends as well as throughout a normal day.

A summer/winter seasonal signal based on fixed dates will also be defined. This will allow plant items to be shut off or controlled in a different manner during a seasonal period. The changeover from Greenwich Mean Time (GMT) to British Summer Time (BST) and back will also be pre-programmed. The BMS calendar will be capable of taking into account leap years.

4.7.29 Optimum Start and Stop Control

Optimum start and stop shall be provided based upon the desired occupancy times for the various zones within the building and the internal and external temperature, such that the desired set point value is reached at the start of the occupancy period based upon the occupancy start time.

4.7.30 Plant Shut Down & Restart of Plant

Each control panel shall incorporate a fire alarm relay for interfacing to the building's fire alarm system. The fire alarm interface shall be provided and connected to the control system by the contractor. The controls specialist shall configure the control logic so that all plant connected to the control panel will shut down under fire alarm conditions and automatically restart when the alarm condition is cleared.

The contractor shall ensure that all mechanical and electrical services systems are interfaced to automatically shut-down upon activation of the fire-alarm in accordance with the recommendations of the Building Control Officer. The plant shall also automatically reset and restart when the fire-alarm is cleared and reset.

4.7.31 Fire Service General Ventilation Override Panel

A fireman's ventilation override panel flush mounted with a brushed stainless steel finish will be provided at the fire service access point into the building. The override panel will provide override control of the main supply and extract ventilation systems within the building (excluding the toilet extract).

All selector switches shall be key operated with the key located in a break glass mounted adjacent to the override panel. All cabling shall be hard wired between the fireman's panel and BMS panels using FP rated cable.

4.7.32 Commissioning

The automatic controls system will be fully commissioned on completion by the controls specialist and a full report included within the building O & M manuals.

4.7.33 Handover

The mechanical services controls specialist will include for all necessary attendance in order to demonstrate the control and operation of the automatic BMS system to the satisfaction of the representatives of the Employer and the Tenant.

4.7.34 Seasonal Commissioning

The controls specialist shall carry out a minimum of 4No. seasonal commissioning visits post Taking Over of the works.

4.8 Fire Safety Systems

4.8.1 Scope & Objectives

The contractor shall be responsible for the supply and installation of fire engineering measures in accordance with the Fire Strategy Report, Building Regulations Approved Document B & F, the requirements of the Fire Officer, all relevant British Standards and industry good practice.

A fire engineering report has been prepared by Omega Fire which details the requirements for the building. The contractor shall familiarise themselves with the contents of the fire strategy report and shall include for the provision of all requirements relating to the MEP services installations.

4.8.2 Fire Hydrants

Fire hydrants and hose reels (where applicable) are to be provided around the development in accordance with Building Regulations Approved Document B and the Building Fire Strategy.

Hydrants should be provided within 90m of an entry point to the building/Fire Service access point.

Hydrants shall have pressure reducing valves and indicator valve plates, the details of which are required to be designed to satisfy the requirements of the local fire authority and/or Building Control Officer.

4.8.3 Protection of Penetrations & Fire Stopping

Penetrations through fire resisting walls or floors should be fire-stopped and all pipes, ducts, conduits or cables passing through a compartment wall/floor fire-stopped as necessary.

4.8.4 Sprinkler Installation

There is currently no allowance for sprinklers to be provided to the development.

4.9 Above Ground Drainage Systems

4.9.1 Scope & Objectives

The contractor shall design, install, test and set to work a complete above ground drainage pipework installation. The installation shall comply with the requirements of the Building Regulations Approved Document H1, the Local Authority Building Inspector and the recommendations of BS EN 12056-1:2000.

4.9.2 Above Ground Soil & Waste Pipework Installation

The above ground drainage system shall comprise of vertical soil and waste ventilated pipework stacks and associated branch connections from all appliances that shall discharge to the below ground drainage system.

The above ground drainage installation shall include the provision of floor gullies within the shower areas and plantrooms.

Condensate drainage from the VRF units located within the open plan office areas will be routed to discharge into the stacks via a trapped connection. Traps shall be dry or transparent in the case of condensate drainage from comfort cooling/heating systems.

Drains will be provided as required to items of plant and equipment complete with air break trap and run to the nearest gully/stack.

Traps and tundishes serving unvented water heaters shall be designed to maintain the trap seal in a flooded condition. Local drainage pipework shall be installed in copper for a suitable distance to avoid the potential high temperature discharge affecting the pipework.

Access is to be provided on all soil and waste stacks at every floor level, at all changes in direction and before they connect to the below ground drainage system. Stack access points shall be extended if necessary to permit maintenance access via end boxing and in all cases these shall extend above the spill over of appliances.

The contractor shall make due allowance for all drainage requirements associated with the Biffa workshop and pits.

4.9.2.1 Standards

The above ground drainage system will comply with the requirements Building Regulations Approved Document H1 and the recommendations of BS EN 12056-1:2000.

The above ground drainage system shall comply in every respect with the recommendations of the manufacturers of individual components which make up the entire system.

4.9.2.2 Design Criteria

The above ground drainage pipework shall be sized in accordance with BS EN 12056 Part 2.

All pipework sizing shall be carried out using the ‘Discharge Unit’ method.

4.9.2.3 Pipework Material

The soil and waste system shall consist of main vertical stacks in un-plasticised polyvinyl chloride (PVC-U) to BS 4514 and BS1329-1, and branch soil and waste pipes in plastic to BS 4514 and BS 5255.

All visible waste pipes must be chrome plated as must traps. Plastic soil and waste pipes shall be plain ended and jointed with solvent cement sockets to BS 4514 for soil pipes and fittings and BS 5255 for waste pipe and fittings. Plastic pipework for WC connections, soil and vent pipes and wastes to be grey where concealed within voids.

Wherever possible the soil and waste pipework shall be contained within service ducts. All exposed pipework shall be carried out in chrome plated copper.

Any pipework susceptible to vehicle damage shall be carried out in cast iron.

4.9.2.4 Acoustic & Thermal Insulation

The contractor shall make full allowance to ensure that noise associated with operation of the above ground drainage system does not create a nuisance. Acoustic insulation shall be provided to soil and waste pipework where required.

Thermal insulation shall be provided to any soil and waste pipework where there is a risk of condensate forming on the pipework.

4.9.2.5 Fire Compartmentation

All above ground drainage pipework passing through fire compartments shall be provided with intumescent fire collars to maintain the fire compartmentation strategy throughout.

4.9.2.6 Plantroom Drainage

The contractor shall provide floor drainage gullies to the enclosed plantroom where required.

4.9.3 Rainwater Drainage System

The contractor shall design, install, test and set to work a complete gravity rainwater drainage system. The installation shall comply with requirements of the Building Regulations Approved Document H, the Local Authority Building Inspector and the recommendations of BS 6763 & BS EN 12056-3:2000.

4.9.3.1 System Description

A gravity rainwater drainage system shall be provided to convey all rainwater from the main roof area to discharge into the below ground rainwater drainage system.

Gravity rainwater systems will in the main comprise of traditionally designed roof outlets, and gutters connecting to vertical rainwater stacks. Some offsets may be required to meet the connections with the pipework below, however these shall be kept to a minimum. The location, type and appearance of all rainwater drainage system components shall be agreed with the Architect and the Consulting Engineer.

The contractor shall allow for installation of all rainwater outlets, associated supports, fixings and ancillary items. The roofing contractor will be responsible for the weather effectiveness of the roof areas.

Any rainwater pipework routed within the ceiling void on any floor is to be fully co-ordinated with the M&E services installations and the building structure.

Any pipework routed outside of the service risers shall be enclosed within a boxing to the Architects detail. The rainwater pipework within the boxing shall be acoustically and thermally insulated.

The contractor shall be responsible for the making all final connections to the below ground drainage system.

Foul and surface water drainage shall be kept separate throughout the entire installation.

Pipework shall be installed with adequate clearance to permit testing, cleaning and maintenance. Access fittings and rodding eyes shall be positioned so that they are not obstructed.

All fixings to the structural steel shall be made using proprietary bracket work that does not require holes to be drilled within the steel. Services fixed to cladding or any other Architectural finishes shall not be made without prior approval from the Architect and structural engineer.

Thermal Expansion Units and anchors points shall be installed on pipework in accordance with the manufacturer's recommendations.

Temporary blanks and capped ends shall be provided to prevent the ingress of foreign material into the above and below ground drainage systems as the work is progressed.

4.9.3.2 Standards

The gravity rainwater disposal system will comply with the requirements Building Regulations Approved Document H and recommendations outlined in BS 6763 & BS EN 12056 Part 3.

The rainwater system shall comply in every respect with the recommendations of the manufacturers of individual components which make up the entire system.

4.9.3.3 Design Criteria

The design rainfall intensity will be calculated in accordance with BS EN 12056 Part 3:2000 to reflect the building life expectancy which is to be confirmed by the Architect.

All rainwater pipework shall be sized to flow at approximately one third and one fifth full (maximum).

4.9.3.4 Roof Outlets and Gutters

Refer to Architects NBS specification for details of the external rainwater goods.

4.9.3.5 Pipework Material

All rainwater pipework routed within areas susceptible to vehicle damage shall be cast iron to BS EN 877 with flexible mechanical couplings.

The rainwater pipework shall consist of main vertical stacks in un-plasticised polyvinyl chloride (PVC-U) to BS EN 12200-1:2000. All rainwater pipework susceptible to vehicle or machinery damage shall be cast iron to BS EN 877 with flexible mechanical couplings.

4.9.3.6 Acoustic & Thermal Insulation

All rainwater pipework exposed at high level or in ceiling voids, warm vertical ducts or service risers shall be acoustically insulated and vapour sealed to prevent condensation.

The contractor shall ensure that further liaison is undertaken with their acoustic consultant to determine the specific acoustic insulation requirements to ensure that noise associated with operation of the rainwater system is not audible within occupied areas of the building and does not create a nuisance.

Thermal insulation shall be provided to any rainwater pipework where there is a risk of condensate forming on the pipework. The contractor shall provide insulated pipework supports/clamps to all internal rainwater pipework to prevent cold bridging.

4.9.3.7 Fire Compartmentation

All rainwater drainage pipework passing through fire compartments shall be provided with intumescent fire collars to maintain the fire compartmentation strategy throughout.

Rainwater pipes shall be isolated from the structure where passing through walls or floors and sleeve pipes shall be used with a suitable fire collar to maintain fire compartment integrity.

4.9.3.8 Identification of Internal Rainwater Pipework

Identification shall be applied in accordance with BS: 1710 using self-adhesive bands or identification clips located at junctions, at both sides of each slab, bulkhead and wall penetrations.

4.9.3.9 Access for Testing and Maintenance

Sufficient access into the rainwater pipework system shall be provided to permit easy cleaning and clearing of blockages.

Access points shall be provided above floor level (at approximately 300mm), at each change of direction and at the point of connection into the below ground drainage system.

4.9.3.10 Testing

On completion of the rainwater drainage pipework system, the system shall be fully tested (including performance testing) and demonstrated to the approval of the Building Control Officer, and the Employer.

The test shall include for the proving the soundness of the interface joint between the above and below ground drainage systems and shall be in accordance with the parameters as laid out in Approved Document H of the current Building Regulations.

The Contractor shall liaise with all parties to arrange witness testing of the system. Seven days' notice shall be given in readiness to test any section of the installation. Test certificates shall be submitted to the person witnessing the test for their signature of approval to the effect that the system satisfies the requirements of this specification.

All tests requested by Local and Statutory Authorities on the entire installation shall be carried out and all necessary equipment for this purpose shall be supplied.

The provision shall also be made for obtaining an acceptance test certificate from the Local Authority on completion of the works.

4.10 Sanitaryware

4.10.1 Scope & Objectives

The contractor shall provide all sanitaryware inclusive of shower thermostatic mixing valves, shower heads, traps, wastes, etc. The contractor shall also include for making all final connections to the above ground drainage and water services systems.

The contractor shall refer to Fletcher Rae Architects sanitaryware schedule for details of the sanitaryware which is to be provided and installed. All sanitaryware shall utilise low water consumption devices, where possible.

The contractor shall supply and fix sanitaryware and shower fittings in accordance with the manufacturer's instructions.

Where sanitaryware has not been specified or the specification is unclear, the contractor shall approach the Employers Agent for direction in order to ensure the Employers requirements have been fully met.

Appendices

Appendix 1 – Approved Manufacturers, Suppliers & Installers

Appendix 2 – Mechanical Services Schedules

Appendix 1 – Approved Manufacturers, Suppliers & Installers

Appendix 1 - Mechanical Services Approved Manufacturers and Suppliers

VRF System	-	Mitsubishi Electric Living Environmental Systems
DX Split Systems	-	Mitsubishi Electric Living Environmental Systems
Server Room Split Systems	-	Mitsubishi Electric Living Environmental Systems
Central AHU's	-	Fläkt Group
	-	Aircraft Air Handling
	-	VES
Local Supply Fans	-	Fläkt Group
	-	NuAire
	-	VES
Electric Panel Heaters	-	Dimplex
	-	Creda Heating
	-	Ecolec
Electric Heater Batteries	-	Supply Air
	-	SP Coils
Overdoor Air Curtains	-	JS Air Curtains
	-	Dunham Bush
	-	Envirotec
Gas Fired Radiant Heating System	-	Nortek Reznor
Lab Room Air Conditioning Systems	-	Airedale
Vehicle Fume Extract System	-	Everquip
	-	Auto Extract Systems
	-	Nederman
Local Heat Recovery Ventilation Unit	-	Mitsubishi Electric
	-	Flakt Woods
	-	VES
Extract Fans	-	Fläkt Group
	-	NuAire
	-	VES
Attenuators	-	Caice
	-	Galloways
	-	Alloway Acoustics
Grilles, Diffusers & Louvres	-	Gilberts
	-	Swegon Air Management
	-	Trox Technix
Fire / Smoke Dampers	-	Actionair
	-	Advanced Air
	-	Motorised Air Products

CAT 5 Cold Water Booster Sets & Break Tanks	-	Arrow Valves
	-	Xylem Water Solutions
	-	Grundfos
Vehicle Wash Down Facilities	-	Premier Pits / Rhino Wash
Local Electric Hot Water Heaters	-	Zip (UK)
	-	Heatrae Sadia
Electric Showers	-	Triton
	-	Mira
Thermostatic Mixing Valves	-	Arrow Valves
	-	Horne Engineering
	-	Reliance Water Controls
Compressed Air System	-	Everquip
BMS Controls	-	Trend
Thermal Insulation	-	Kingspan
Valves	-	Hattersley
	-	Crane Valves
	-	Tour & Andersson
Trace Heating Systems	-	Raychem
	-	Heat Trace
	-	Cross Electrical
Ductwork Thermal Insulation	-	Kingspan Insulation
Pipework Thermal Insulation	-	Kingspan Insulation

Mechanical Services Approved Installers

VRF System	- Temperature Control
	- Controlled Air Solutions
	- Select Air
Building Management System	- Eco-I Ltd
	- Impact Controls
	- Building Technology Systems

Appendix 2 – Mechanical Services Schedules

Appendix 2 - Mechanical Services Schedules

1.0 VRF Heating & Comfort Cooling Systems
2.0 DX Split Systems
3.0 Server Room Split Systems
4.0 Lab Room Air Conditioning Systems
5.0 Gas Fired Radiant Heating System
6.0 Overdoor Air Curtains
7.0 Electric Panel Heaters
8.0 Air Handling Units
9.0 Local Heat Recovery Ventilation Unit
10.0 Toilet Extract Fan
11.0 Vehicle Fume Extract System
12.0 Attenuators
13.0 Supply & Extract Grilles
14.0 Supply & Extract Grilles
15.0 Supply & Extract Grilles
16.0 Fire Dampers
17.0 Motorised Fire & Smoke Dampers
18.0 Fluid Category 5 Cold Water Booster Set
19.0 Local Electric Hot Water Heaters
20.0 Thermostatic Mixing Valves
21.0 BMS Controls System
22.0 Ductwork Thermal Insulation
23.0 Pipework Thermal Insulation
24.0 General Valves
25.0 Trace Heating System
26.0 Local Supply Fans

1.0 VRF Heating & Comfort Cooling Systems

Item	-	VRF Heating & Comfort Cooling System
Location	-	External Condensers, external plant enclosure
Manuf. / Supplier	-	Mitsubishi Electric Living Environmental Systems
Contact	-	Craig Newsham, 07595 566490
Range	-	R2 Series High COP
Refrigerant	-	R410a
SCOP (min)	-	4.0
SEER (min)	-	6.0
Indoor Units	-	Ceiling concealed ducted units
Electrical Supply	-	3-Phase external condensers, 1-Phase indoor units & BC controllers
Controls	-	AE-200E central controllers & local wall mounted controllers

Alternative Manuf.	-	
	-	

2.0 DX Split Systems

Item	-	DX Split Systems
Location	-	External Condensers, external plant enclosure
Manuf. / Supplier	-	Mitsubishi Electric Living Environmental Systems
Contact	-	Craig Newsham, 07595 566490
Range	-	Mr Slim
Indoor Units	-	PKA wall mounted
External Condenser	-	PUZ – ZM Power Inverter Heat Pump
Refrigerant	-	R32
Electrical Supply	-	1-Phase

Alternative Manuf.	-	
	-	

3.0 Server Room Split Systems

Item	-	DX Split Systems
Location	-	External Condensers, external plant enclosure
Manuf. / Supplier	-	Mitsubishi Electric Living Environmental Systems
Contact	-	Craig Newsham, 07595 566490
Range	-	Mr Slim
Indoor Units	-	PKA wall mounted
External Condenser	-	PUZ – ZM Power Inverter Heat Pump
Refrigerant	-	R32
Electrical Supply	-	1-Phase
System Resilience	-	N+1

Alternative Manuf.	-	
	-	

4.0 Lab Room Air Conditioning Systems

Item	-	Lab Room Air Conditioning Systems
Location	-	External Condensers within external plant enclosure
Manuf. / Supplier	-	Airedale
Accessories	-	Complete with built in intelligent controller
System Resilience	-	N+1

Alternative Manuf.	-	
	-	

5.0 Gas Fired Radiant Heating System

Item	-	Gas Fired Radiant Heating System
Location	-	Biffa Workshop and Sublet Areas
Manuf. / Supplier	-	Nortek
Model	-	Reznor Vision VS50UHEN
Accessories	-	Complete with Ambirad SmartCom zone controllers and black bulb sensors
Heat Source	-	Gas

Alternative Manuf.	-	
	-	

6.0 Overdoor Air Curtains

Item	-	Door Air Curtain
Location	-	Workshop and Main Entrances
Manuf. / Supplier	-	JS Air Curtains
Contact	-	sales@jsaircurtains.com 01903 858 656
Colour	-	RAL to be agreed with the Architect
Heat Source	-	Electric

Alternative Manuf.	-	Dunham Bush
	-	Envirotec

7.0 Electric Panel Heaters

Item	-	Electric Panel Heater (LST where required)
Location	-	As indicated on the tender drawings
Manuf. / Supplier	-	Dimplex
Type	-	Flat panel glass fronted radiator
Mounting	-	Wall
Height	-	To suit heat loss requirements (radiators on all floors to be same length)
Length	-	To suit heat loss requirements (radiators on all floors to be same length)
Colour	-	RAL to be agreed with the Architect

Alternative Manuf.	-	Creda Heating
	-	Ecolec

8.0 Air Handling Units

Item	-	Air Handling Units
Location	-	External Plant Area
Manuf. / Supplier	-	Flakt Group UK Ltd
Contact	-	Andy Window, 07801 723212
Range	-	eQ
SFP (max)	-	1.90 W/l/s
Dampers	-	Motorised inlet & discharge dampers
Filters (Supply)	-	G4 panel filter, F7 bag filter
Filters (Extract)	-	G4 panel filter
Fans	-	Blue Fin wall fan, VSD and EC fan motor
Heat Recovery	-	Rotary thermal wheel, minimum 75% efficiency
Heating Coil	-	Electric heater batter with thyristor control providing a minimum 5˚C temperature increase of the air off temperature from the thermal wheel
Access	-	Access sections to be provided between thermal wheel & electric heater battery on supply and between thermal wheel and fan chamber on extract
Accessories	-	Manometer fitted across filters, hinged access doors on fan & filter sections, flexible connectors fitted to fans internally & internal anti-vibration mounts

Alternative Manuf.	-	Aircraft Air Handling
	-	VES

9.0 Local Heat Recovery Ventilation Unit

Item	-	Local Heat Recovery Ventilation Unit
Location	-	Ceiling Void Local to Area Served
Manuf. / Supplier	-	Mitsubishi Electric Living Environmental Systems
Contact	-	Craig Newsham, 07595 566490
Range	-	Lossnay
SFP (max)	-	1.50 W/l/s
Filter	-	G4
Motor	-	EC Motor
Electrical Supply	-	1-Phase
Integral Controls	-	Yes

Alternative Manuf.	-	VES
	-	Flakt Group

10.0 Toilet Extract Fan

Item	-	Toilet Extract Fan
Location	-	Plant Room
Manuf. / Supplier	-	VES
Contact	-	0161 848 8711
Range	-	Colourfan
Type	-	Twin fan external
SFP (max)	-	0.50 W/l/s
Electrical Supply	-	3-Phase
Integral Controls	-	Yes

Alternative Manuf.	-	NuAire
	-	Flakt Group

11.0 Vehicle Fume Extract System

Item	-	Vehicle Fume Extract System
Location	-	Biffa Workshop
Manuf. / Supplier	-	Everquip
Contact	-	0194 226 7444

Alternative Manuf.	-	Nederman
	-	Auto Extract Systems

12.0 Attenuator Specification Sheet

Item	-	Attenuator
Manuf. / Supplier	-	CAICE
Contact	-	0118 918 6470
Outer Casing	-	22 gauge galvanised steel
Filler Material	-	Inorganic mineral or glass fibre

Alternative Manuf.	-	Galloways
	-	Alloway Acoustics

13.0 Grilles & Diffusers

Item	-	Grilles & Diffusers
Ref	-	GT 1
Location	-	Open plan offices & cellular offices
Manuf. / Supplier	-	Gilberts (Blackpool) Ltd
Contact	-	Jason Laugharne, 07464 547554
Type	-	4 Way Square Perforated Face
Description	-	Square perforated & concealed deflection cassettes to provide 1,2,3 or 4 way discharge + hinged opening fascia
Finish	-	RAL colour to Architects specification
Mounting	-	Suspended ceiling
Plenum box	-	Matching plenum box c/w 12mm insulation

Alternative Manuf.	-	Swegon Air Management
	-	Trox Technix

14.0 Grilles & Diffusers

Item	-	Grilles & Diffusers
Ref	-	GT2
Location	-	Server rooms, kitchenette etc
Manuf. / Supplier	-	Gilberts (Blackpool) Ltd
Contact	-	Jason Laugharne, 07464 547554
Type	-	Square Perforated Face
Finish	-	RAL colour finish to Architects specification
Mounting / Fixing	-	Suspended ceiling / Plasterboard ceiling / Exposed
Plenum Box	-	Matching plenum box c/w 12mm insulation

Alternative Manuf.	-	Swegon Air Management
	-	Trox Technix

15.0 Grilles & Diffusers

Item	-	Grilles & Diffusers
Ref	-	GT3
Location	-	Toilet areas, shower areas & cleaners' cupboards
Manuf. / Supplier	-	Gilberts (Blackpool) Ltd
Contact	-	Jason Laugharne, 07464 547554
Type	-	Egg Crate
Blades	-	None
Mounting	-	Suspended ceiling / Plasterboard ceiling / Exposed
Finish	-	RAL colour finish to Architects specification

Alternative Manuf.	-	Swegon Air Management
	-	Trox Technix

16.0 Fire Dampers

Item	-	Fusible Link Fire Damper
Manuf. / Supplier	-	Actionair
Contact	-	Dave Harding, 07710 601523
Range	-	FireShield 'E' Rated
Type	-	Curtain bladed fusible link fire damper
Certification	-	LPCB certification scheme, CE Marked to suit application

Alternative Manuf.	-	Advanced Air
	-	Motorised Air Products

17.0 Motorised Fire & Smoke Dampers

Item	-	Motorised Fire & Smoke Damper
Manuf. / Supplier	-	Actionair
Contact	-	Dave Harding, 07710 601523
Range	-	SmokeShield PTC 'ES' Rated
Type	-	Automatic fire damper
Operation	-	Spring fail-safe closed
Certification	-	LPCB certification scheme, CE Marked to suit application
Damper Intelligent Control Panel	-	Actionpac LNS5

Alternative Manuf.	-	Advanced Air
	-	Motorised Air Products

18.0 CAT 5 Cold Water Booster Set

Item	-	Fluid Category 5 Cold Water Booster Set
Location	-	Plant Room
Manuf. / Supplier	-	Arrow Valves
Range	-	Boost-A-Break
No. of Pumps	-	Two; duty/standby
Inverter	-	Yes
Electrical Supply	-	1-Phase
Flexible Conns.	-	Yes
Anti-Vibration	-	Yes
Integral Controls	-	Yes

Alternative Manuf.	-	Grundfos
	-	Xylem Water Solutions

19.0 Local Electric Hot Water Heaters

Item	-	Unvented Hot Water Heaters
Location	-	As indicated on tender drawings
Manuf. / Supplier	-	Zip Heaters
Contact	-	Leah Morrisey, 07790 917422
Type	-	Zip Aquapoint
Accessories	-	Water heaters to be complete with expansion vessel and expansion relief valve where necessary
Electrical Supply	-	1-Phase

Alternative Manuf.	-	Heatrae Sadia
	-	

20.0 Thermostatic Mixing Valves

Item	-	Thermostatic Mixing Valve
Location	-	Wash hand basins within toilet areas, all levels
Manuf. / Supplier	-	Arrow Valves
Range	-	TMV 5213 kit 6
Set-Point Temp	-	41°C
Approval	-	TMV3 and WRAS approved

Alternative Manuf.	-	Horne Engineering
	-	Reliance Water Controls

21.0 BMS Controls

Item	-	BMS Controls System
Manuf. / Supplier	-	Trend
Supervisor	-	Trend
BMS Network	-	Trend
Specialist Installer	-	Eco-I Ltd
Contact	-	Mr Chris Roscoe, 07590 880 795
Location	-	Main control panel(s) located within plant areas
Front End PC	-	TBC

Alternative Manuf.	-	Impact Controls
	-	Building Technology Systems

22.0 Ductwork Thermal Insulation

Item	-	Ductwork Thermal Insulation
Location	-	All fresh air, supply air and return air ductwork services routing externally, within risers, ceiling voids, exposed & within unheated areas
Manuf. / Supplier	-	Kingspan Insulation
Range	-	Kooltherm FM
Type	-	Rigid duct sections with factory applied aluminium foil (internal use) and aluminium clad (external use)
Thermal Conductivity	-	0.025 Wm^2 K (based on 25 year aged value)
Thickness	-	In accordance with Part L requirements
Ozone Depletion Potential	-	Zero
Global Warming Potential	-	Low
Certification	-	LABC Building Control certification

Alternative Manuf.	-	
	-	

23.0 Pipework Thermal Insulation

Item	-	Pipework Thermal Insulation
Location	-	All, DHW, MCWS, TCWS & BCWS services routing through ducts, ceiling voids, risers & unheated areas
Manuf. / Supplier	-	Kingspan Insulation
Range	-	Kooltherm FM
Type	-	Pre-formed pipe sections with factory applied aluminium foil (internal use) and aluminium clad (external use), 'isogenapak' finish within plantrooms
Thermal Conductivity	-	0.025 Wm^2 K (based on 25 year aged value)
Thickness	-	In accordance with Part L
Ozone Depletion Potential	-	Zero
Global Warming Potential	-	Low
Certification	-	LABC Building Control certification

Alternative Manuf.	-	
	-	

24.0 General Valves

Item	-	Gate Valves/Butterfly Valves/Ball Valves
Manuf. / Supplier	-	Hattersley
Contact	-	01473 277410
Range	-	Fig 30/Fig 980/Fig1807C
Body	-	DZR/Bronze

Alternative Manuf.	-	Crane Valves
	-	Tour & Andersson

25.0 Trace Heating System

Item	-	Trace Heating System
Location	-	All piped services routing through unheated areas
Manuf. / Supplier	-	Raychem
Type	-	Self-regulating tape
Maintenance Temp	-	5°C
Electrical Supply	-	1-Phase
Integral Controls	-	RAYSTAT – ECO control unit

Alternative Manuf.	-	Heat Trace
	-	Cross Electrical

26.0 Local Supply Fans

Item	-	Local Supply Fans
Location	-	Ceiling Void or Area Served
Manuf. / Supplier	-	Nuaire
Contact	-	Mr Warren Wright, 07767 298 210
Range	-	DAVE Supply Fans
Heater Battery	-	Electric
SFP (max)	-	0.40 W/l/s
Electrical Supply	-	1-Phase
Integral Controls	-	Yes

Alternative Manuf.	-	VES
	-	Flakt Group

5.0 Electrical Services Installation

5.1 Design Standards
5.2 Design Criteria
5.3 Incoming Power Supply
5.4 Standby Power
5.5 LV Power Distribution
5.6 Power Supplies
5.7 Small Power Outlets
5.8 Specialist Systems Power
5.9 Electric Vehicle Charging Points
5.10 Energy Metering
5.11 Earthing & Bonding
5.12 Lightning Protection System
5.13 Internal Lighting Installation
5.14 External Lighting
5.15 Lighting Controls
5.16 Emergency Lighting
5.17 Fire Detection & Alarm System
5.18 Aspirating Fire Detection Systems
5.19 Emergency Assistance Alarm System
5.20 Hearing Enhancement System
5.21 Security Systems Overview
5.22 Intruder Alarm System
5.23 CCTV Surveillance System
5.24 Access Control System
5.25 Incoming Telecoms
5.26 ICT Structured Wiring Network
5.27 Wireless Network
5.28 Client PC's
5.29 Cabling & Containment
5.30 Miscellaneous

Appendices

Appendix 1 - Approved Manufacturers & Suppliers

Appendix 2 - Approved System Installers

Appendix 3 - Electrical Equipment Connection Schedules

Appendix 4 - Proposed Luminaire Schedules

Appendix 5 - ICT Responsibilities Interface Matrix

Appendix 6 - Lighting Control Methodology & Equipment Schedules

Appendix 7 - CCTV System Equipment Schedule

Appendix 8 – Fire Alarm & Aspirating System Equipment Schedule

Appendix 9 – EVC Equipment - Staff Provision

Appendix 10 – Accessible Toilet Alarm Equipment Schedule

Appendix 11 – Induction Loop Equipment Schedule

Appendix 12 – Access Control & Intercom Equipment Schedule

Appendix 13 – Intruder Alarm System Equipment Schedule

5.0 Electrical Services Installation

5.1 Design Standards

5.1.1 Design Standards

The design and installation of the MEP building services installation shall be carried out in accordance with all current UK Legislation, British Standards, Technical Standards, Codes of Practice, Engineering Design Guides, Workmanship Standards and Quality Standards.

The contractor shall also refer to the following documents, as current at the time of design:-

- Manchester City Council – Hammerstone Road Employers Requirements (2018)
- Manchester City Council - Standard Specification for Electrical Engineering Services (2018)

5.1.2 Building Control & Fire Officer Approval

The design and installation of the MEP building services installation shall be to the full approval of the local Building Control and Fire Officer, written confirmation of the same shall be provided at handover.

5.2 Design Criteria

5.2.1 Electrical Power Distribution

- Existing Substation No 1 – Supplies North Car Park, Winter Maintenance area existing provision for Bin Wagon EVC.
- New Substation No 2 – Supplies all internal Depot building, South Car Park, Gatehouse and Staff EVC.

5.2.2 Substation No 1

ENWL/MCC engineers providing substation No1 have installed two troughs to the rear of the substation ready for you to take additional cabling into the substation, there are also spare ways on the main LV switch panel.

A main LV switch panel and some associated switchgear has been installed on the right hand side and the end wall, the left-hand wall is free for any further switchgear to be installed as required albeit cladding with plywood shall need to be provided to suit.

The Bin Wagon charging points are relocated for the final scheme to central North car park area but still supplied from Existing Substation No 1. This relocation was expected to be carried oyt by MCC as they installed the original scheme but this may be included within electrical contractor works as a separate package of works

5.2.3 Substation No 2 – Internal Warehouse

The main depot building / new substation shall house a 1000KVA and supplies areas as detailed above. Refer to Main electrical schematic and associated Amtech distribution schedules for full load allocation and specific circuit details.

Existing Substation / Load

Existing warehouse building houses 800KVA Transformer supplying existing MCC Warehouse and other ancillary building supplies (exc. Coca Cola Building)

Utility references warehouse substation (Gordon Lane 172094) Capacity advised at 330 KVA? Previous Max Demand recorded at 208 KVA. The spare load at this substation already utilised by ENWL for other developments in the adjacent area.

Coca Cola Building

Coca Cola Building supplied from ENWL Substation (Froxmer Street 171674)
Separate supply - capacity unknown
Max Demand 73KVA

Total Site Load

Total Existing Load – pre new works - 281 KVA

5.2.4 Power Supply Designation

Essential Power Supplies

Essential power supplies shall be installed to serve essential systems in accordance with BS 9999 ‘Code of practice for fire safety in the design, management and use of buildings’.

Essential power supplies shall also be installed to serve other designated essential loads.

Designated Essential Supplies

Designated essential loads include;

– LV switchroom small power and lighting.

- Data network cabinet.
- Data network cabinet rooms power and lighting.

Non-Essential Power Supplies

All other power supplies shall be designated ‘non-essential’.

5.3 Incoming Power Supply

Work Associated with the Incoming Power Supply

5.3.1 Host Distribution Network Operator (DNO)

The host DNO is Electricity North West (ENWL).

Contact - Michelle Range - 08433 114378

Alternative IDNO - Ameon Utilities

Contact – Jamie Barlow – 07595 412003

5.3.2 New Supply Application

The contractor shall note that a new increased 1000KVA supply application has been made for Substation No 2 and quotation received.

Discussions progressing with Ameon Utilities at this time on the basis that they potentially would undertake Contestable works with ENWL limited to undertaking non-contestable works. Further details awaited.

The original supply capacity application has been retained to allow flexibility.

The existing 800kVA DNO substation shall be retained in its current location and a new 1000kVA substation shall be installed adjoining the existing substation.

The previous spare capacity on the existing substation has subsequently been allocated to other developments since the initial load assessments were considered.

The customers main isolation points shall be at two separate locations on the site:-

- Isolation Point No 1 - The main isolator located within the LV Switchroom adjacent the incoming Substation No 1 / Distribution equipment and provides supplies to the North site car park and Ancillary Buildings along with existing Bin Wagon EVC points.
- Isolation Point No 2 - The main isolator located within the LV switchroom adjacent the incoming Substation No 2 / Distribution equipment and provides supplies to the South site car park, Internal Warehouse and Gatehouse.

As noted above due to there being two separate substations feeding the site power requirements a separation point has been provisionally agreed to ensure no crossover of supplies on site between the two separate sources.

This may develop into a different split if further expansion of bin wagon supply provision is required but this can be reviewed further if required at Stage 4b.

For reference MCC contact dealing with the current substation No1 installation and the bin wagon charging points is included below if specific information required.

Chris Mac Neil - Electrical Engineer, Manchester City Council
Tel: 0161 600 8462, Internal: 800 38462, Mobile: 07976 228 779
Email: chris.mcneil@manchester.gov.uk

Current design information for substation No1 LV switchroom / installation for bin wagon charging installation has been included for reference only within supplementary information section of this specification.

This is not as fitted information and only provided for reference when relocation of charging points is undertaken and space allowance guidance for LV switchroom where additional LV panel for external works shall be located.

Associated Works

The contractor shall be responsible for all works associated with incoming power supply except those carried out by the DNO, the contractor shall include for management, supervision and co-ordination of the works, all necessary builderswork and electrical services installations.

5.3.3 Energy Supply & Metering

Energy Supply Contract

MCC existing supply arrangement is expected to continue as current agreement with increased supply arrangement.

Meter Operator (MOP) Contract

MCC existing meter operator and contract is expected to continue as current agreement.

Note the meter operator is responsible for installing the meter and ongoing maintenance.

5.4 Standby Power

5.4.1 Secondary Power Supplies

There are currently 'no requirements' for Standby Power Systems although the use of a standby generator on a temporary basis to keep various operations ongoing is still under consideration. Noise issues and length of time a temporary generator may be required are factors being weighed up again the reliability and compliant of the existing electrical infrastructure installation.

In the absence of a generator secondary power supplies can be provided via battery back-up for individual systems – relevant essential systems would include:-

- Fire detection and Alarm Systems
- Emergency Lighting
- Signage
- Two way communication Systems
- LV switchroom small power and lighting.
- Landlord's data network cabinet (Via dedicated UPS Provision)
- Landlord's data network cabinet room power and lighting.

Non-Essential Power Supplies

All other power supplies shall be designated 'non-essential'.

5.4.2 UPS Systems

Each of the proposed 2No Comms rooms to have suitably sizes UPS –

- MCC - 16m2 room allocated
- Biffa - 16m2 room allocated.

5.4.3 Photovoltaic Generation Systems

In line with a target requirement to achieve a zero carbon rating for the site.

PV Panels installed to the roof area of the main warehouse has been discussed as part of a council wide initiative and separate works package.

Full details and specialist design to be undertaken at the next stage of design 4b once instructions to proceed with any such installation have been given by MCC.

All future works shall be co-ordinated with MCC chosen energy advice partner via Phil Owen - 07901 528757.

5.4.4 Battery Storage Systems (BESS)

Commercial battery energy storage is a possible solution for the development should surplus electricity be generated by the PV. Battery storage of the PV produced electricity provides a number of advantages which could be advantageous for an industrial premises as follows:

- Solar PV battery storage stores excess solar for later use
- Grid independence
- Electrical vehicle charging

Currently allowance for 24No charging points have been provided, albeit this is for staff vehicle use only and not maintenance / refuse vehicle provision. The bin wagon charging points as previously stated are from North site Substation No1.

5.5 LV Power Distribution

5.5.1 Main LV Switchboard Ref MSB1

Reference	MCC/LV1 (Main LV Panel)
Location	LV Switchroom - Adjacent External Substation No1

Switchboard Construction

Construction Type	IP31 free standing cubicle construction
Material & Finish	Powder coated steel enclosure
Cable Way Access	Front Access
Integral Plinth	Yes, 100mm
Form Rating	Form 4b Type 7
Current Rating	1800A TPN
Conductors	L1+L2+L3+N+PE
Conductor Material	HDHC copper
Fault Rating	50kA for 1s
Outgoing Ways	Refer to the electrical distribution schematic
Incoming Cables	Bottom entry – review required of exiting switchroom arrangement prior to panel order.
Outgoing Cables	Top exit (solid busbar connections where required)
Manufacturer / Range	Schneider / system P floor mounted

5.5.2 Main LV Switchboard Ref MSB2

Switchboard Details

Reference	MCC/LV2 (Main LV Panel)
Location	LV Switchroom – Main Warehouse Building

Switchboard Construction

Construction Type	IP31 free standing cubicle construction
Material & Finish	Powder coated steel enclosure
Cable Way Access	Front Access
Integral Plinth	Yes, 100mm
Form Rating	Form 4b Type 7
Current Rating	1800A TPN
Conductors	L1+L2+L3+N+PE
Conductor Material	HDHC copper
Fault Rating	50kA for 1s
Outgoing Ways	Refer to the electrical distribution schematic
Incoming Cables	Top entry

Outgoing Cables	Top exit (solid busbar connections where required)
Manufacturer / Range	Schneider / system P floor mounted

Circuit Breakers

Incoming Device Type	ACB
Restricted Earth Fault	No provision
Manufacturer / Range	Schneider MTZ Micrologic 5.0
Outgoing Device type	MCCB with electronic trip
Manufacturer / Range	Schneider Micrologic 2.0

Spare Capacity

Provision	Minimum 25% spare electrical load capacity
	Spare outgoing ways as indicated on the electrical schematic
	Refer to schematic for details

Energy Metering

Provision	Yes as indicated on the electrical distribution schematic
Type	Incoming supplies; Multi-Functional (PM5110)
	Outgoing supplies; Standard MID Approved (PM5110)
Location	Panel mounted on the main LV switchboard
Manufacturer / Range	Schneider / PM Range

Surge Protection Devices (SPD's)

Provision	Yes to comply with BS EN 61643 Part 11
Type	Type 1 & 2 as required
Location	Installed within the main LV switchboard
Manufacturer / Range	Schneider / Megapact

Power Factor Correction (PFC)

Provision	To maintain a power factor of >0.95
Type	Separate free standing automatic detuned power factor correction unit - VE item to be provided as required.
Location	Ground Floor LV switchroom
Manufacturer / Range	Schneider / AccuSine

Harmonic Filter Connection

Provision	TBC - VE item to be provided as required.

5.5.3 MCCB Panel Boards

MCCB panel boards shall be installed to serve large plant supplies and general distribution load.

MCCB panel boards shall be located in main electrical switch room and Biffa workshop area.

The initial intention was that the main Biffa section board would supply sub distribution board included within an early enabling works package to keep Biffa operational during the transition / strip out works.

This has recently changed following site investigations and the intention now is to increase to size of the Bin Store board and also increase the supply cable from the Main Biffa temp panel installed in the LV Switchroom to cater for temp workshop installation.

This subsequently allows progress on the enabling works to re-locate Biffa workshop and allow operations to continue during the strip out works.

General Requirements

Each panel board shall be provided with the following;

- 150x150mm trunking for incoming cable terminations.
- 150x150mm trunking for outgoing cable terminations.
- A padlock fitted to the hinged front access door.
- Blanking plates fitted to unused outgoing ways.
- An engraved traffolyte label fixed to the front door.
- Laminated circuit chart fixed to the inside of the door.

Circuit Wiring

All cables shall be terminated into the panel board with sufficient length to allow circuits to be rearranged without rewiring or the use of joints.

MCCB Panel Board

Enclosure	Steel enclosure with lockable hinged access door and padlock
IP Rating	IP30 rating
Form Rating	Form 3b type 2
Current Rating	250A / 400A / 630A as indicated
Fault Rating	36 or 50kA, 0.5 or 1s (TBC by the Contractor)
Outgoing Ways	As indicated
Incoming Cables	Bottom entry
Outgoing Cables	Top exit
Incoming Device Type	Suitably rated incoming switch disconnector(s)
Outgoing Device Type	Suitably rated outgoing MCCB's
Spare Capacity	Minimum 25% spare electrical load capacity
	Minimum 25% spare outgoing ways on each phase
Energy Metering	As indicated, installed with side extension panel
Surge Protection	Yes to comply with BS EN 61643 Part 11
Manufacturer / Range	Schneider / Powerpact 4 Panel Board

5.5.4 MCB Distribution Boards

The building shall be divided into a number of electrical distribution zones each provided with dedicated distribution boards to serve small power, lighting and mechanical power services.

Type A and B, standard and split load MCB distribution boards shall be installed as required to enable energy usage associated with small power and lighting to be separately sub-metered.

Distribution boards shall generally be located in electrical switch rooms, plant rooms and store cupboards.

General Requirements

Each distribution board shall be provided the following;

- 150x150mm trunking for incoming cable terminations.
- 150x150mm trunking for outgoing cable terminations.
- A padlock fitted to the hinged front access door.
- Blanking plates fitted to unused outgoing ways.
- An engraved traffolyte label fixed to the front door.
- Laminated circuit chart fixed to the inside of the door.

Circuit Rewiring

All cables shall be terminated into the distribution board with sufficient length to allow circuits to be rearranged without rewiring or the use of joints.

Type A SP MCB Distribution Board

Enclosure	Steel enclosure with lockable hinged access door and padlock
IP Rating	IP30 rating, IP55 in external areas
Form Rating	Form 3b type 2
Current Rating	125A
Fault Rating	16kA
Outgoing Ways	Refer to the electrical distribution schematic
Incoming Cables	Bottom entry
Outgoing Cables	Top exit
Incoming Device Type	Suitably rated incoming switch disconnector(s)
Outgoing Device Type	Suitably rated outgoing MCB's / RCBO's (B, C or D)
Spare Capacity	Minimum 25% spare electrical load capacity
	Minimum 25% spare outgoing ways on each phase
Energy Metering	As required
Surge Protection	Yes to comply with BS EN 61643 Part 11
Manufacturer / Range	Schneider / Acti 9 A Type

Type B TP MCB Distribution Board

Enclosure	Steel enclosure with lockable hinged access door and padlock
IP Rating	IP30 rating, IP55 in external areas
Form Rating	Form 3b type 2
Current Rating	125A / 250A / 400A
Fault Rating	25kA
Outgoing Ways	Refer to the electrical distribution schematic
Incoming Cables	Bottom entry
Outgoing Cables	Top exit
Incoming Device Type	Suitably rated incoming switch disconnector(s)
Outgoing Device Type	Suitably rated outgoing MCB's / RCBO's (B, C or D)
Spare Capacity	Minimum 25% spare electrical load capacity
	Minimum 25% spare outgoing ways on each phase
Energy Metering	As required
Surge Protection	Yes to comply with BS EN 61643 Part 11
Manufacturer / Range	Schneider / Acti 9 B Type

5.5.5 Circuit Protective Devices

General Requirement

Circuit protection devices shall be provided in accordance with BS 7671.

MCCB's

MCCB's shall be stab mounted.

MCCB's shall be suitably rated (16-800A).

Miniature Circuit Breakers (MCB's)

MCB's shall be DIN rail mounted and occupy a single outgoing way in the distribution board.

MCB's shall be suitably rated (6-63A) with operating characteristics B, C or D to suit the load.

MCB's shall provide visible indication of a tripped circuit independent of the ON / OFF toggle.

Residual Current Circuit Breakers with Overload Protection (RCBO's)

RCBO's shall be DIN rail mounted and occupy a single outgoing way in the distribution board.

RCBO's shall be suitably rated (6-45A) with 10, 30 or 100mA trip sensitivity to suit the load.

5.5.6 Surge Protection Devices (SPD's)

Type 1, 2 or 3 surge protection devices shall be installed to protect the electrical distribution system and equipment connected to it from electrical surges and spikes including those caused by lightning strikes and utility network faults to comply with BS EN 62305 'Protection against lightning and BS 7671 'IET Wiring Regulations'.

5.5.7 Power Factor Correction (PFC)

Detuned PFC shall be provided to improve the overall efficiency and quality of the power supply.

PFC units shall be installed in banks and automatically switched in stages to maintain the required power factor (> 0.95).

PFC components shall be located within a dedicated free standing enclosure separate to the main LV switchboard in the LV switchroom.

Potentially a VE item initially to be added as required

DIN Rail Enclosures

DIN rail enclosure shall be provided where required to house contactors and control devices.

DIN rail enclosures shall generally be located in switch rooms, plant rooms and riser cupboards.

5.5.8 DIN rail enclosure specification;

- Powder coated steel enclosure c/w hinged access door.
- IP30 rating, IP55 in external areas.
- DIN rail mounting arrangement.
- Minimum 25% spare ways.
- Padlock fitted to front cover.
- Blanking plates fitted to unused ways.
- Engraved traffolyte label fixed to the front of the door.

5.6 Power Supplies

5.6.1 Supply Board

Major plant supplies shall be derived from the main LV switchboard and MCCB panel boards.

Small power and lighting supplies shall be derived from dedicated / split distribution boards.

The sub-distribution infrastructure within the building / site overall shall be installed to allow individual metering and distribution to each section / tenant.

5.6.2 Building Systems Power Supplies

Power supplies shall be provided in the locations required by the building systems specialists.

Power supply requirements shall be obtained from the building specialists and the necessary provisions included.

A suitable means of local isolation shall be provided for each item of plant and equipment in accordance with BS 7671 'IEE Wiring Regulations'.

Final connections to building systems plant and equipment shall be installed by the electrical sub-contractor.

5.6.3 Mechanical Services Power Supplies

The electrical contractor shall provide and install the power wiring to all mechanical services equipment to ensure a fully operational installation on handover.

A suitable means of local isolation shall be provided for each item of plant and equipment in accordance with BS 7671 'IEE Wiring Regulations'.

Power supplies shall be derived from the local power distribution boards.

5.6.4 External Power Supplies

Power supplies shall be provided to serve the car park lighting and any external power requirements from external car park distribution pillars via dedicated RCD protected circuit.

Feeder Pillars

The current allowance if for 3No feeder pillars located in strategic locations within the external / car park areas to provide local connected circuits.

All power supply ducting shall be installed and connected to any existing external car park power ducting where feasible and where the capacity and condition can be verified.

All ducting draw pits shall be fully co-ordinated with the landscape architect and client.

External IP65 sockets (Car Park / Anciliary Buildings)

There shall be a requirements for External IP65 rated socket outlets (with lockable covers) provided in the following areas

- 2No - Gatehouse - External wall
- 6No - Vehicle Wash Bay area
- 2No - Winter Maintenance and Vehicle Garage – External Wall

External IP65 sockets (Building Mounted)

4No – IP65 rated socket outlets shall be provided on the external face of the main building to accommodate wash down facilities at the skip area and any future requirements.

These sockets shall be supplied via internal building distribution board.

5.7 Small Power Outlets

5.7.1 General Socket Outlets

13A switched socket outlets shall be provided in the locations indicated on the layout drawings.

Sockets shall be supplied from the local power distribution board via dedicated RCD protected circuits.

5.7.2 Maintenance Socket Outlets

13A RCD protected switched socket outlet shall be provided for use by maintenance personnel.

Maintenance socket outlets shall be supplied from the local power distribution board via dedicated circuits.

A 2G RCD protected switched socket outlet shall be provided in the electrical switchroom, generally mounted at mid-height and located adjacent to the room entry door.

5.7.3 Cleaners Socket Outlets

1G 13A switched socket outlets shall be provided for the connection of cleaning equipment indicated on the layout drawings.

Cleaner's socket outlets shall be supplied from the local power distribution board via dedicated RCD protected circuits.

Cleaners sockets shall be provided with a lockable key switched facility fed from the local landlord distribution board.

Wall mounted socket outlets mounted at low level or floor grommets shall be provided along circulation routes

Within cellular rooms wall mounted socket outlets shall be provided in each room generally mounted at low level adjacent to room entry doors.

5.7.4 Appliance Socket Outlets

13A switched socket outlets shall be provided to serve kitchen appliances, white goods etc. where installed.

Socket outlets located in inaccessible locations such as those installed below worktops shall be fed via a DP isolating control switch installed in an accessible location above the worktop.

Sockets shall be supplied from the local power distribution board via dedicated RCD protected

Water heaters shall be provided within cleaners cupboards and below vanity units – refer to MEP layout drawings for quantity, locations and circuit references.

5.7.5 Office Floor Void / Underfloor Busbar Installation

Minimum 100mm floor void shall be requested within the office areas to all floors levels.

Underfloor busbar track system shall be installed within the floor void in general / open plan office area for the connection of office equipment and workstations.

Where indicated the system shall comprise of 32A single phase 2-pole and earth standard metal clad track complete with tap-off facilities at 300mm centres.

Supplies to the track shall be derived from the local power board fed via 32A rated MCB's enabling 32A un-fused tap-off units to be used c/w 5m cable installed within flexible metal conduit.

The underfloor busbar track system shall be arranged to provide complete coverage of the office floor plate less any inaccessible floor areas.

The underfloor busbar track system shall be fixed directly to the floor slab using proprietary fixings and brackets.

Underfloor Busbar track shall be installed perpendicular to the raised access floor grid.

Underfloor Busbar track shall be labelled at the supply end feed unit detailing its circuit reference.

As a general principal

- Floor Grommets – Open Plan Office areas / Workstations
- Floor Boxes – Meeting Rooms / Printers etc.

5.7.6 Office Desk Power Modules

MCC have advised Egan Reid normally provide desk power modules as part of the office furniture and MCC often get TIS in to patch to the tables once the furniture is in situ.

On this note it is understood that MCC shall request quotes for this works when required and order direct.

Desk power shall consist of 2No sockets on top and 4No sockets below (fused at 3A).

Desk data shall consist of 1No data presented on top.

5.7.7 Floor Outlet Boxes

Floor outlet boxes shall comprise of 3-compartment metal boxes (100mm floor void) complete with 2no 2-gang switched socket outlets and 4no RJ45 data outlets (2No only pre-wired)

RCD protection shall be provided at the distribution board to comply with requirements of clause 411.3.3 in BS7671.

Floor outlet boxes shall be fed from the underfloor busbar track system via 32A un-fused tap-off unit's c/w 4.0mm2 single-core OHLS insulated cables installed within flexible conduit.

Final positions shall need to be co-ordinated with the office furniture layout and agreed at a later date.

Floor boxes are provided below meeting tables as required.

Floor grommets and workstation power leads to workstation positions as required.

Floor box socket outlet provision shall be provided as required to serve printers, etc. located at various positions around the open plan office areas.

Slab recessed floor boxes shall be provided with slab recessed trunking / conduits if no raised access floor is available.

Final positions shall need to be co-ordinated with office furniture layout and agreed at later date.

5.7.8 Floor Outlet Grommets

Floor outlet grommets shall be provided where suitable to enable power, voice and a data cabling to pass through the raised access floor based on the following general criteria:-

- 1No grommet per standalone workstation
- 1No grommet / 2nr workstations where workstations are banked together.

Floor outlet grommets shall comprise of 144mm moulded grommets designed to allow up to 3no 20mm flexible conduits to be passed through the opening.

Final positions shall need to be co-ordinated with the office furniture layout and agreed at a later date.

5.7.9 Workstation Power Socket Outlets - Dado Trunking Mounted

Workstation Power Socket outlets flush mounted on surface mounted dado trunking containment systems shall comprise of 2no 2-gang 30mA RCD protected dual earth switched socket outlets and one 2-gang 4way RJ45 data outlet plate for future ICT outlets at each workstation position.

Dado Mounted Workstation Power Socket Outlets shall be provided to the modular office areas and meeting rooms for AV provision as required in addition to the Gatehouse.

5.7.10 Electric Height Adjustable Desks

The original brief required 10% of MCC desks to be electric height adjustable – final details/ if required shall be confirmed in the next stage 4b…

5.7.11 Dado

2 compartment perimeter wall Dado trunking shall comprise of surface mounted white moulded trunking.

Dado trunking shall be suitable for the installation of Cat 6 U/FTP cable.

Where conduit drops are provided to dado trunking they shall be installed flush within the wall.

5.7.12 Data Installation

- RJ45 Outlets shall be provided throughout generally as follows:-
- 4no RJ45 data outlets per workstation (2No pre-wired).
- 4no RJ45 data outlets per floor box (2No pre-wired).

Cat 6 U/FTP low smoke data cabling shall be provided conforming to TIA/EIA standard.

5.7.13 Hand Dryer Units & Power Supplies

Hand dryer units and power supplies shall be installed in the positions indicated on the layout drawings.

Hand dryers shall comprise of surface mounted energy efficient impact resistant plastic units complete with touch-free infra-red activation system, manufacturer and model details below.

5.7.14 Dyson Airblade V, Nickel finish.

Exact hand dryer specifications to be signed off by the client prior to procurement.

To clarify hand dryer units shall be supplied and installed by the electrical sub-contractor.

A suitable means of local isolation shall be provided for each item of plant and equipment in accordance with BS 7671 ‘IEE Wiring Regulations’.

Power supplies shall be derived from the local power distribution board.

5.8 Specialist Systems Power

General

Power supplies shall be installed throughout to serve all plant, specialist systems equipment and general requirements e.g. roller shutters, water coolers, water boilers, door access controllers, disabled Refuge Points, etc.

5.8.1 Comms Room Power

Each data cabinet shall be provided with dual 16A supplies via commando socket installation with PDU to include surge protection for all data cabinets to prevent damage to sensitive equipment.

1No twin data and 2No twin power sockets shall be installed on dado within the Comms room supplied from dedicated internal distribution board.

5.8.2 Pace Room

2no Pace rooms have been provided with the following requirements:-

- Adequate heating, lighting and ventilation within the 2No rooms proposed
- Double sockets for recording equipment
- Panic alarm for staff to raise assistance in emergency
- Access controlled door
- Internal CCTV Camera coverage.
- Method of notifying when room in use (current room has a light outside) – requirement TBC

It should be noted however that MCC have advised that this is not a full specification Pace room as would, for example be provided in the usual manner for Police / security conscious facility and as such can be treated as a standard meeting room with allowance for some upgraded facilities i.e. recording equipment and panic button.

5.8.3 Roller Shutters

Along the full perimeter of the building there a number of large openings requiring roller shutters and all shall be provided with new electrically operated units.

Full details to be co-ordinated with Architect.

5.8.4 Air Curtains

Suitably sized electrically operated overdoor air curtains shall be provided at each of the main openings in addition to any entry doors at reception areas.

Full details to be co-ordinated with mechanical services contractor.

5.8.5 Corporate Room Booking System

Corporate room booking system shall be provided to main MCC meeting rooms to ensure efficient use of the facilities.

The system shall manage the booking and usage of designated rooms and any associated facilities required for the meeting activities including refreshment requirements and shall help to ensure maximum utilisation of these rooms particularly in the event of a no show / cancelled meeting when a booked room would remain unused until the next booked event.

Co-ordination with MCC to agree final system specification requirements at next stage 4b.

Wayfinder screens shall be provided in strategic locations to provide a summary of the status of all managed rooms and hot desks.

5.8.6 Fuel Station

Power and lighting requirements shall be provided to fuel station area in line with specialist requirements.

5.8.7 Petrol Interceptor

Power requirements shall be provided to petrol interceptor in line with specialist requirements.

5.8.8 Jet Wash Station

Power and lighting requirements shall be provided to Jet Wash area in line with requirements.

5.8.9 Mobile Lifts

6no highlighted by MCC as the normal provision -

- Existing lifts require 3Phase power supplies as currently provided
- New lifts require 230V supply as they are battery operated and blue tooth operated.

5.8.10 General Workshop Power

Multiple 110v, 230v, 400v, 32A and 64A supplies shall be provided in line with MCC requirements – full details to be advised by MCC / Biffa in line with the workshop requirements intended for the temporary workshop location and the final workshop arrangement.

Biffa Workshop - MOT Pits / Vehicle Pits

- 110v Supply and associated outlets and lighting.
- 32A 400V Charge Point
- 32A 400V Beam Setter
- 32A 400V Fabrication Bay

As indicated on Fletcher Rae drawing HRD-FRA-01-00-DR-A-20-1202

5.8.11 Gas Fired Radiant Heating

Space heating to the Biffa Workshop shall be provided via a high level gas fired radiant heating system. The may be a requirement to provide additional temp supplies to the temp Biffa workshop area (MCC Bin Store) to enable temp relocation to be provided in the interim period of works.

The Electrical Contractor shall install single phase electrical power within 3m of each SmartCom controller, and each end-of-run vacuum flue fan. The supplies shall terminate with a suitably rated local isolator.

The Mechanical Contractor shall install all electrical power and control wiring required, from each isolator to its respective controller and from each controller to their associated heaters and flue fans.

The Electrical contractor shall co-ordinate with the Mechanical Contractor who shall be installing the complete system of automatic controls and the interconnecting wiring as specified in MCC's Standard Controls Specification.

5.8.12 Electric Heating

Space heating to the ancillary areas of the development not covered by the VRF comfort cooling/heating systems shall be heated only by high quality (Duplex) glass fronted electric panel heaters.

The Electrical Contractor shall install power supplies to the electric panel heaters in the locations indicated on the layout drawings and as required by the Mechanical Contractor.

5.8.13 Electric Showers

Wall mounted electric showers shall be provided as indicated on the layout drawings. Each shower unit shall be rated at a minimum of 9.5 kW.

5.8.14 PV Installation

Discussions have previously taken place under a separate appointment on the suitability of a PV / battery installation for the Hammerstone Road site. A subsequent report was issued to MCC and this may be added to the scheme design works in the future / developed at Stage 4b with specialist involvement.

This would consist of a fully operational PV system including all required equipment, framing and mounting, isolators, inverters, meters wiring and power supplies in the location detailed within Fletcher Rae Architects tender drawings.

Final optimum angle of the modules confirmed by the specialist PV contractor.

The contractor shall mount all solar panels, make all AC and DC cabling works to the inverter equipment and make connection to a dedicated 3 Phase isolator.

A communication interface shall be installed to allow the actual operating data to be retrieved and logged using the appropriate PC program.

The solar PV system shall be supplied and installed by a company that can demonstrate 5-years trading experience.

5.8.15 Car Park Entry/Exit Barriers

The contractor shall allow for power supplies only to the barrier system to be installed at the vehicle entrance / exit to the Car Park.

The circuits shall be installed using multicore copper XLPE /OHLS armoured and shall be chased/cast within (using sufficiently sized ducting) the finished concrete bases, where local to the barriers, and within floor levels so that cabling is re-wireable.

Exact power supply requirements for the barriers shall be obtained from the Main Contractor once barrier suppliers have been confirmed.

Power supplies shall terminate at the barrier isolator, provided by the barrier manufacturer/Main Contractor. Final connection of the cabling to the isolator shall be undertaken by the contractor to the barrier specialist requirements.

5.8.16 Digital Signage

No allowance for digital signage has been included - all signage shall be none illuminated standard signage.

5.8.17 TV Systems

AV allowance for TV systems etc. has been included within MCC office meeting rooms following recent MCC comments via wall mounted dado installation.

5.9 Electric Vehicle Charging Points (EVC)

5.9.1 General

(24)No 7kw 1PH car charging points shall be provided via approved supplier – current selection is based on dual socket, post mounted outlets provided by the following supplier:-

POD Point - 020 7247 4114

The above allowance is allocated for staff car / parking facilities use and not for refuse / maintenance vehicles which has not been included / identified at this time.

5.9.2 EVC Installation

The 24No charging points (12No locations – twin posts) have been indicated on the current design layouts at the south car park area / bottom end of the site.

The approx. full charge time would be 4Hr.

Supply cables must be rated to the power rating of the charge point as lower power rated cables shall cause the charging to take place at the cables current carrying capacity and increase the charging time.

A bollard / pole mounted type external EVC point equipment shall be installed in such a way as to avoid creating unnecessary trip hazards.

The electrical vehicle charging equipment shall be installed such that the main operating controls including any socket outlets are installed between 0.75 m and 1.2 m above the finished floor level.

EVC point shall be fed via feeder pillar final power circuit, no diversity included for final EVC circuits / cable size.

The EVC shall be a twin 7KW (2x3.5KW) single phase universal type socket outlet.

The below shall also be considered when selecting the EVC equipment and protection: -

i) The EVC point shall protected by a 30 mA (type A) RCD that disconnects all live conductors including the neutral conductor.

ii) The EVC point shall provide the necessary IP rating for the environment in which it is installed.

iii) All connectors, glands and conduits are of an appropriate IP rating, installed in such a way as to maintain a suitable IP rating in accordance with BS7671.

iv) The EVC shall be mode 3 charging standard.

v) The EVC shall self-monitor the load capacity and adjust as not to overload the main supply capacity.

vi) The EVC unit shall be lockable or include internal functional switching to prevent unauthorised use.

vii) The EVC shall include an earth monitoring system to isolate the supply if a potential fault is detected (70 V rms maximum).

5.9.3 Control and Metering

The EVC installation is currently intended to be supplied via external feeder cabinet however final details of the distribution equipment / load management installation shall be confirmed to ensure it will fit within the constraints of the cabinet.

If not sufficient space then the installation shall be fed via a dedicated internal landlord distribution board and metering system.

The metering system shall allow the building management to monitor the electricity usage.

5.9.4 Earthing Arrangement

Specialist to be involved in the final design and installation of the EVC charging points and the associated earthing requirements.

Refer to section 5.11 for further details

5.10 Energy Metering

5.10.1 Scope & Objectives

Metering shall be installed to monitor and record energy usage within the building.

Energy metering shall be provided as required to comply with Approved Document L2A.

Meters shall be multi-functional or standard depending on their location and the load served.

Any meters installed to record for sub-tenant energy usage shall be the 'MID Approved' type.

5.10.2 Multi-Functional Meters

Provision;

- On main incoming supply to a main switchboard.

5.10.3 Energy Meters

Provision;

- Each Distribution Board
- Each major plant supply.

5.10.4 BMS Links

All meters shall be linked to the BMS to allow central collection and data logging.

5.10.5 Software System

A fully automated meter software package shall be provided as part of the BMS package.

The software shall be installed on the BMS Comms and Client PC.

5.11 Earthing & Bonding

5.11.1 Scope & Objectives

Earthing and bonding shall be carried out in accordance with BS 7671 'IET Wiring Regulations'.

System Components

- DNO's main earthing point.
- Earthing conductors.
- Main earthing terminal (earth bar).
- Circuit protective conductors.
- Main protective bonding conductors.
- Supplementary bonding conductors.
- Clean Earth System

5.11.2 Incoming Supply Earthing Arrangement

A TN-C-S earthing system shall be installed by the DNO.

5.11.3 Main Earthing Terminal

A main earthing terminal (earth bar) shall be provided for the connection of the following;

- Circuit protective conductors.
- Protective bonding conductors.
- Functional earthing conductors.
- Lighting protection system bonding conductor.

Earth terminals shall comprise of hard drawn pre tapped copper bars c/w rounded corners, disconnection links fixed to the wall using insulated supports, spacers and fixings.

Earth terminals shall be provided with a minimum 25% spare capacity for the connection of additional earth cables.

5.11.4 Protective Conductors

Protective conductors shall be sized in accordance with table 54.7 in BS 7671 and as below.

Conductor Cross Sectional Area (CSA) Minimum CSA of the Protective Conductor

Conductor Cross Sectional Area (CSA)	Minimum CSA of the Protective Conductor
(S)	
(mm^2)	(mm^2)
S ≤ 16.0	S
16.0 < S ≤ 35.0	16.0
S > 35.0	½ S

Note the CSA of cable armouring shall not be considered when sizing protective conductors.

Protective conductors shall be made of the same material as the circuit phase conductors.

Protective conductors shall comprise of single-core G/Y XLPE (LSZH) cables installed alongside the neutral conductor or an integral core of a multi-core cable.

5.11.5 Protective Equipotential Bonding

Protective equipotential bonding shall be provided to connect extraneous conductive metallic parts to the main earthing terminal.

Extraneous conductive metallic parts shall include;

- Water supply pipe.
- Gas supply pipe.
- Primary pipework routes.
- Primary ductwork routes.
- Exposed structural metalwork.
- Lightning protection system (in accordance with BS EN 62305).

Main protective bonding conductors shall be sized in accordance with the table 54.8 in BS 7671.

Main protective bonding conductors shall comprise of single-core G/Y XLPE(LSZH) cables.

5.11.6 Supplementary Bonding

Supplementary bonding shall be provided to connect together exposed conductive parts and exposed conductive parts and extraneous conductive parts including

- Joints in containment systems.
- Flexible joints in pipework.
- Flexible joints in ductwork.
- Suspended ceiling systems.
- Raised access floor systems.

Supplementary bonding conductors shall comprise of single-core G/Y XLPE (LSZH) cables.

5.11.7 EVC Earthing System

The contractor shall ensure that the correct earthing arrangement is provided to protect against potential earth faults in accordance with BS7671 and in line with manufacturer's installation instructions. As this is externally positioned then the same regulations apply for street furniture and as if the charger was a lighting column and a separate earth electrode is required.

It is the contractor's responsibility to conduct a risk assessment of the electrical or metallic items in the immediate area to a range of 10m of the proposed location of the POD point unit,

The POD point earth shall be independent of the main supply system earth with no direct connection to the incoming supply The SWA protective cover shall be connected to the building structure or main earth and insulated from the pod point unit.

The electrical contractor shall install a copper rod electrode complete with appropriate CSA cable, termination housing and covers where appropriate.

Earth / neutral impedance shall be less than 150ohms, preferably less than 100ohms.

POD point unit earth to rod impedance shall be less than 1ohm.

For further details refer to Equipment Schedules / Earthing guidance document – Appendix 9

POD-point – Contact – Tom Stebbing – 07534 695811

5.12 Lightning Protection System

5.12.1 Scope & Objectives

A lightning protection system shall be provided in accordance with the relevant parts of BS EN 62305 'Protection against lightning' to protect the building and its contents including persons from a direct lightning strike.

5.12.2 System Classification

An initial risk assessment has been carried out in conjunction with Lightning Protection Specialist and the results identified a Level 4 classification and requirements.

Santon LPS Ltd – Anthony Bertenshaw – 0161 3517333

5.12.3 Building Structure

The building structure shall be utilised as part of the lightning protection system where possible to do so.

5.12.4 System Components

- Air Termination Network (via roof)
- Down conductor network.
- Earth termination network
- System inspection pits / test points.
- Metalwork bonding.

5.12.5 Conductors Material

Copper conductors shall be used throughout.

5.12.6 Air Termination Network

The Metal clad roof shall be utilised as the air termination network and assumed to be continuous throughout.

Vertical rods and / or strike plates shall be installed to protect and prominent roof features and equipment albeit no expected apart from future PV installation if provided.

5.12.7 Down Conductor Network

Down conductors shall be installed to connect the roof air termination network to the earth termination network.

5.12.8 Earth Termination Network

Earth electrodes in the form of rods or plates shall be installed externally around the building perimeter.

Earth electrode connections shall be housed within GRP inspection pit with lockable covers.

5.12.9 System Test Points

Accessible test points shall be installed to facilitate periodic testing of the earth termination network.

5.12.10 Metalwork Bonding

All external metalwork including cladding, handrails, cleaning rails, cooling plant, air handling units, pipe work, cable containment and aerial systems shall be bonded to the lightning protection system.

5.13 Internal Lighting Installation

5.13.1 Scope and Objectives

Lighting shall be installed to provide the necessary illumination levels for visual tasks and activities, and to enhance the visual appearance of the architectural building features.

5.13.2 Lighting Design Criteria

The lighting installation shall be designed in accordance with the CIBSE SLL Lighting Guides.

Refer to the information provided for particular requirements relating to lighting design criteria.

MCC Office

Area	Illuminance (lux)	Lamp Source	Luminaire Ref	Proposed Luminaires
Open Plan Offices	500 lux	LED	A	Recessed Modular 600x600mm Luminaires
Cellular Offices / Meeting Rooms	500 lux	LED	A1	Recessed Modular 600x600mm Luminaires
Laboratory/Trading Standards Workshop	500 lux	LED	H	Recessed Modular (sealed) 600x600mm Luminaires
Stores	100 lux	LED	FS	Linear Surface Luminaire
Male / Female WCs	200 lux	LED	C/C1	Recessed Downlights
Male / Female Change	200 lux	LED	C/G	Recessed Downlights
Welfare Room	500 lux	LED	A1	Recessed Modular 600x600mm Luminaires
FM Ops Room	500 lux	LED	A1	Recessed Modular 600x600mm Luminaires
Breakout	300 lux	LED	K	Modular Linear System
Multi Faith Room	200 lux	LED	A1	Recessed Modular 600x600mm Luminaires
Food Prep	300 lux	LED	J	Recessed Modular 600x600mm Luminaires
Comms Room	200 lux	LED	J	Recessed Modular 600x600mm Luminaires
Plant Room / BOH Corridors	200 lux	LED	D	IP66 Linear Surface Luminaire
Library	300 lux	LED	J1	Recessed Modular 600x600mm Luminaires
Pace Room	500 lux	LED	A	Recessed Modular 600x600mm Luminaires
Weights Room	300 lux	LED	H	Recessed Modular Clean 600x600mm Luminaires
Drying Room	200 lux	LED	D	IP66 Linear Surface Luminaire
Circulation	200 lux	LED	B/B1	Recessed Downlights

Disabled WC	200 lux	LED	C1	Recessed Downlights
Cleaners	100 lux	LED	FS	Linear Surface Luminaire
Decon	200 lux	LED	D	IP66 Linear Surface Luminaire

MCC Storage & Independent Operators

Area	Illuminance (lux)	Lamp Source	Luminaire Ref	Proposed Luminaires
Elections Storage Elections Office?	100 lux 500 lux)	LED	M	Linear Luminaires
FM Storage	100 lux	LED	M	Open caged enclosure Suspended Hi-Bay Luminaire
Pest Control Storage	100 lux	LED	M	Open caged enclosure Suspended Hi-Bay Luminaire
Trading Standards Storage	100 lux	LED	M	Open caged enclosure Suspended Hi-Bay Luminaire

Area of Sublet

Area	Illuminance (lux)	Lamp Source	Luminaire Ref	Proposed Luminaires
shell	100 lux	LED	M	Suspended Hi-Bay Luminaire

Biffa Offices

Area	Illuminance (lux)	Lamp Source	Luminaire Ref	Proposed Luminaires
Open Plan Offices	500 lux	LED	A	Recessed Modular 600x600mm Luminaires
Cellular Offices / Meeting Rooms	500 lux	LED	A1	Recessed Modular 600x600mm Luminaires
Office Supplies	200 lux	LED	FS	Linear Surface Luminaire
Cleaners / Store	100 lux	LED	FS	Linear Surface Luminaire
PPE Store & Collection	100 lux	LED	D	IP66 Linear Surface Luminaire
Male/Female WCs	200 lux	LED	C/C1	Recessed Downlights
Male / Female Change / Shower	200 lux	LED	C/G	Recessed Downlights
Drying Room	200 lux	LED	D	IP66 Linear Surface Luminaire
Confidential Filing Room	300 lux	LED	A1	Recessed Modular 600x600mm Luminaires
Breakroom	300 lux	LED	J	Recessed Modular 600x600mm Luminaires

Food Prep	300 lux	LED	J	Recessed Modular 600x600mm Luminaires

Biffa Workshop

Area	Illuminance (lux)	Lamp Source	Luminaire Ref	Proposed Luminaires
Workshop	300	LED	M	Suspended Hi-Bay Luminaire

MCC Bin Store / Plating Shed

Area	Illuminance (lux)	Lamp Source	Luminaire Ref	Proposed Luminaires
Bin Store / Biffa Temp. Workshop	100/300	LED	M	Suspended Hi-Bay Luminaire

Gatehouse

Area	Illuminance (lux)	Lamp Source	Luminaire Ref	Proposed Luminaires
Office	500	LED	A	Recessed Modular 600x600mm Luminaires
Kitchen	300	LED	C	Recessed Downlights
WCs	200	LED	C1	Recessed Downlights

Grit & Salt Storage

Area	Illuminance (lux)	Lamp Source	Luminaire Ref	Proposed Luminaires
Open storage	100	LED	D	Linear Surface Luminaire

Winter Maintenance and Gritter Garage

Area	Illuminance (lux)	Lamp Source	Luminaire Ref	Proposed Luminaires
Office	500	LED	A1	Recessed Modular (sealed) 600x600mm Luminaires
Welfare	300	LED	J	Modular
WCs	200	LED	C1	Recessed Downlights
Garage	100	LED	D1	IP66 Linear Surface Luminaire
Circulation	100	LED	C2	Recessed Downlights
Acc. WC & Shower	200	LED	G1	IP65 Recessed Downlight

5.13.3 Lighting Zone

A 150mm minimum clear lighting zone shall be provided above ceilings within cellular office areas with open plan office areas generally exposed services installation.

5.13.4 Luminaire Types

Refer to the luminaire schedule and notional lighting layouts for requirements.

5.13.5 Light Sources

LED light sources shall be used throughout with a colour rendering of Ra 82 or above.

5.13.6 Lamp / LED Colour Temperature

Lamp colour temperature shall be subject to client team review and selection – Refer to luminaire schedule at this stage.

5.13.7 Lamp / LED Quality

Standard Deviation Match - The degree of deviation of its colour temperature as defined in MacAdam ellipses shall achieve colour quality Step 3.

5.13.8 LED Downlights

LED downlights shall incorporate 'Chip on Board' (COB) technology.

Lighting Control Gear

All luminaires shall be provided with DALI dimmable control gear.

5.13.9 Luminaire Optics

Luminaires shall include suitable optics, reflectors and shields to control light distribution and limit light spill.

5.13.10 Supply of Lamps

Luminaires shall be supplied complete with working lamps.

5.13.11 Working Samples

Working samples of each luminaire type shall be provided for client team sign-off prior to finalising the design, the samples shall be installed within the mock-up section of suspended ceiling grid for inspection.

5.13.12 Lighting Calculations

A full set of lighting calculations shall be provided to demonstrate compliance with the specification requirements.

Lighting calculations shall be produced using the latest version of DIALux or Relux software.

Lighting calculations reports shall include the following results;

- Room name.
- Room details.
- Luminaire mounting height.
- Working plane height.
- Reflectance values for the ceiling, walls and floor.
- Luminaire details.
- Total area (m2).

- Total power (W).
- Power density (W/m2).
- Power density (W/m2/100lux).
- Average maintained illumination level on the working plane (Em).
- Uniformity (Uo) on the working plane.
- Average maintained illumination level on each wall (Em).
- Uniformity (Uo) on each wall.
- Average maintained illumination level on the ceiling (Em).
- Uniformity (Uo) on the ceiling.
- Cylindrical illumination level and modelling ratio (for certain areas only).

5.14 External Lighting

5.14.1 Scope & Objectives

The focus of the external lighting design shall be to maintain the necessary lighting levels for the various operations around the site whilst maintaining safety and security at night and to support the safe operation of the building during hours of darkness.

5.14.2 Lighting Design Criteria

The external lighting installation shall be designed in accordance with AD L2A 'Conservation of Fuel and Power in New Buildings', the CIBSE SLL Lighting Guides and SLL Guidance for the Reduction of Obtrusive Light.

The external lighting scheme shall be to the full approvals of the local planning authority.

Energy consumption shall be minimised through the use of high efficient luminaires with low-energy LED light sources.

Light pollution shall be avoided through the careful selection, positioning and aiming of the luminaires

5.14.3 Car Park / Building Perimeter

General car park lighting / building perimeter lighting shall be provided via free standing column mounted luminaires / building mounted luminaires where necessary.

External lighting columns shall be of the hinged type to allow the luminaire heads to be lowered to a safe working height for installation and ongoing future maintenance.

External door area entry / exit area lighting shall be achieved using vandal resistant building wall mounted luminaires mounted at door / roller shutter locations.

Power supplies to the car park lighting shall be connected to a dedicated car park distribution pillar indicated on the layout drawings.

Car park lighting shall be fed via a dedicated RCD protected circuit.

All luminaires shall be supplied complete with control gear and lamps

All lamps shall have a colour temp of 4000°K unless stated otherwise.

All LED lamps shall be colour binned to ensure consistent lamp colour.

Working samples of all luminaires with lamp colour options shall be provided during the design and selection period for client approval.

Area	Min Average Maintained Illuminance (lux)	Lamp Source	Min Uniformity
Entry Points	20	LED	0.25
Building Perimeter	5	LED	0.25
Open Area Car Park Parking	20	LED	0.25

5.15 Lighting Controls

5.15.1 Scope & Objectives

A lighting control system shall be installed to provide complete control of the building lighting installation and minimise energy waste through automatic switching and dimming systems.

The system shall allow the lighting control system in any sub-tenancy to be independently re-commissioned without affecting the lighting in any other areas.

5.15.2 System Type

Fully addressable lighting control system with front end client PC, software, area controllers, pluggable and hard wired LCM's, DALI gateway modules, manual and automatic switching devices and scene set controllers, capable of operating with or without a front end client PC.

5.15.3 Lighting Control Methods

Refer to the lighting control strategy layouts for further information on current intended lighting control strategy for individual areas.

5.15.4 System Components

- Front end client PC.
- System software.
- Area controllers.
- Pluggable LCM's.
- Hard wired LCM's.
- DALI gateway modules.
- Multi sensors.
- Photocells.
- Manual switches.
- Simple hand held switching device.
- Hand held programming device.
- Cabling and containment.
- Power supplies
- Data connections.

5.15.5 Area Controllers

Area controllers shall be the DIN rail mounted type and installed within a separate enclosure mounted adjacent to the local distribution board.

5.15.6 Pluggable LCM's

Pluggable LCM's shall be installed in areas with accessible ceiling voids for the connection of luminaires.

Pluggable LCM's installed in office areas shall be provided on the basis that each luminaire is connected to its own LCM port and 1no spare port is provided on each LCM.

5.15.7 Hard Wired LCM's

Hard wired LCM's shall be provided for the connection of luminaires installed in non-accessible ceilings and areas with no ceilings.

Hardwired LCM's modules shall be installed adjacent to the local distribution boards / area controllers.

5.15.8 DALI Gateways Modules

DALI gateways modules shall be provided for the connection of DALI addressable devices including DALI luminaire ballasts, DALI EMPRO inverters and DALI compatible sensors.

DALI gateway modules shall be the DIN rail mounted type and installed within a separate enclosure mounted adjacent to the local distribution board.

5.15.9 Multi Sensors (AUTO ON / OFF)

Multi sensors with passive infrared (PIR) sensor and light level sensor shall be installed to provide occupancy, absence and daylight detection AUTO ON / OFF.

Occupancy Detection –

The lighting is automatically switched ON when occupancy is detected.

When the space becomes unoccupied the light output from the luminaires is gradually reduced over a set time period before switching OFF.

Absence Detection –

Lighting is manually switched ON.

When the space becomes unoccupied the light output from the luminaires is gradually reduced over a set time period before switching OFF

5.15.10 Daylight Linking (Dimming)

The light output from the luminaires is automatically adjusted to suit natural daylight contribution in the space and maintain the desired lighting level on the working plane.

All changes in light output shall be gradual. Time delays shall be employed to counter act the rapid fluctuation in natural light caused by passing clouds etc.

5.15.11 Route Linking

Areas along the route of travel are illuminated prior to entering the space, therefore a building occupant never has to enter an unlit space.

5.15.12 Manual Switches (MANUAL ON / OFF / DIMMING)

Retractive centre bias switches shall be installed to provide MANUAL ON / OFF control, MANUAL DIMMING shall be possible by pressing and holding the switch up or down.

5.15.13 Manual Key Switch (MANUAL ALL ON / OFF)

A manual key switch shall be installed within each main tenanted area i.e. MCC / Biffa. The main switch shall provide MANUAL ALL ON-OFF control of the tenant's office lighting installation.

Final location TBC but initially allowed at each main entrance door.

5.15.14 Hand Held Programming Device

A hand held programming device capable of programming and identifying each addressable device shall be provided to facilitate manual control and adjustment of the control system.

5.15.15 Water Solenoid Valves

Water solenoid valves shall be linked to the lighting control system and shut-off the water supply when the area is unoccupied.

5.15.16 Power Supplies

Power supplies shall be provided as required by the system specialist.

Power supply requirements include;

A13A 230V power supply at each area controller.

5.15.17 Data Connections

Data connections shall be provided as required by the system specialist.

Data connections shall include - 1G RJ45 data outlet at each area controller.

5.15.18 System Commissioning

The exact control requirements for each space shall be discussed and agreed with the client and engineer prior to finalising the lighting control system design and commissioning plan.

5.15.19 External Lighting Controls

Power supplies to external lighting shall be fed via contactor controlled circuits.

External lighting control shall be provided by a twilight switch and time clock arrangement.

A 3-position manual override key switch shall be installed to provide ON-OFF-AUTO control.

Lighting contactors shall be the DIN rail mounted type and installed within external feeder pillar located adjacent to the external lighting distribution board.

Twilight switches shall have an adjustable photocell, selectable time delay and be mounted in an IP66 vandal resistant enclosure.

Time clocks shall be the 7-day 24-hour solar dial type which are capable of tracking SUNSET and SUNRISE.

5.16 Emergency Lighting

5.16.1 Scope & Objectives

Emergency lighting shall be provided in accordance with Approved Document B 'Fire safety. Buildings other than dwellings' and BS 5266 'Code of Practice for Emergency Lighting'.

5.16.2 Building Control & Fire Officer Approval

The design and installation shall be to the full approval of the Building Control & Fire Officer.

5.16.3 System Overview

The emergency lighting system shall comprise of the following:-

- Non-maintained self-contained emergency conversions of normal luminaires to low level ceiling areas,
- Central battery units for emergency luminaires within high level areas,
- Self-contained switched maintained emergency exit signs,
- DALI EM PRO addressable inverters fitted to all emergency luminaires,
- Automatic testing and monitoring via the central lighting control system and
- Necessary system software.

5.16.4 System Classification

System Classification 'X–0–B–180'.

Type	X	Self-Contained
Mode	0	Non-Maintained
Facilities	B	Remote Test (DALI EMPRO)
Duration	180	3-Hour Duration

Emergency lighting shall be provided by self-contained emergency luminaires c/w integral batteries.

5.16.5 Test Facilities

All emergency luminaires shall have DALI EMPRO addressable inverters to enable central testing and monitoring via the lighting control system.

5.16.6 Emergency Lighting Duration

The emergency lighting installation shall operate for a minimum duration of 3-hours on loss of supply.

Emergency lighting shall operate in non-maintained mode, operating on loss of the normal supply.

Illuminated exit signs shall operate in switched maintained mode, operational at all times the building is occupied and on loss of the normal supply.

5.16.7 Illumination Levels

The emergency lighting installation shall achieve the illumination levels described in BS 5266-1.

Area	Level
Escape routes up to 2m wide shall be illuminated to a minimum 1 lux along the centre line of the escape route	1.0 lux
Open Areas (Anti Panic)	0.5 lux
High Risk Area	10% of normal / 15 lux min

5.16.8 Luminaire Selections

Refer to the luminaire schedule for luminaire selection requirements.

All luminaires shall be supplied complete with housing, control gear, lamp holders and lamps.

All external luminaires shall be vandal resistant and IP rated to suit external environment.

5.16.9 Illuminated Exit Signs

Illuminated exit signs shall be provided along escape routes and at final exits to clearly indicate the building escape routes.

Illuminated exit signs shall be fitted with running man legends to comply with the EC Safety Signs Directive (92/58/EEC).

5.16.10 Health Status LED Indication

Each emergency luminaire shall be provided with a ‘health status’ LED which shall be clearly visible from a viewing position below the fitting when the normal lighting is operational.

Where it is not possible to incorporate the ‘health status’ LED into the luminaire body or trim it shall be installed adjacent to the fitting in the ceiling.

5.17 Fire Detection & Alarm System

5.17.1 Scope & Objectives

A fire detection and alarm system shall be provided in accordance with Approved Document B Volume 2 'Fire safety. Buildings other than dwellings' and BS 5839_1 'Fire detection and fire alarm systems for buildings. Code of practice for design, installation, commissioning and maintenance of systems in non-domestic premises'.

5.17.2 System Category

A fully (open protocol) Category 'L2' System networked interactive digital addressable fire detection and alarm system.

5.17.3 Cause & Effect Schedule

A 'Cause and Effect Schedule' shall be prepared in accordance with the Building Fire Strategy and agreed with Building Control and Fire Officer prior to commencement of the works on site.

5.17.4 System Components

- Main control panel.
- Node Panels
- Alarm transmission.
- Optical smoke and heat multi sensors.
- Heat sensors / tape.
- Fire aspirating systems.
- Manual call points.
- Alarm sounders.
- Visual alarm devices (VAD's).
- Alarm transmission system.
- Plant isolation key switch.
- Zone plan.
- Cabling and containment.
- Power supplies.
- Data connections.
- System interfaces.

5.17.5 Main Fire Alarm Control Panel & Repeater Panel Locations

- Gatehouse
- MCC Office
- Biffa Office
- Sublet
- Loop Repeater – Biffa Offices Secondary Entrance Fire Alarm Loop Expansion Panel

The main control panel shall comprise of a flush mounted, networkable, multi-loop (4-loop minimum), digital addressable control panel c/w integral QWERTY keyboard and graphics output facility.

Panel Location	Loop No	Area of Cover
Gatehouse Office 6501/NET64/P/C	1 (1)	Gatehouse
Gritter Office 6501/NET64/P/C	1 (2)	Gritter Garage
MCC Offices 6504/NET64/P/O	1 (3) 2 (4) 3 (5) 4 (6)	MCC Offices 1 of 2 MCC Offices 2 of 2 MCC Bin Store Loop Spare
MCC Storage 6501/NET64/O/C	1 (7)	MCC Storage & Warehouse
Sublet 6501/NET64/O/C	1 (8)	Sublet
Biffa Offices 6504/NET64/P/O	1 (9) 2 (10) 3 (11) 4 (12)	Biffa Office 1 of 2 Biffa Office 2 of 2 Biffa Workshop Loop Spare

5.17.6 Zone Plan

A 1:200 scale glass laminated colour coded zone plan shall be provided adjacent each fire alarm control panel.

Zone	Area Description
1	MCC Office
2	MCC Storage & Independent Users
3	Tenant Sublet
4	Biffa Office
5	Biffa Workshop
6	MCC Bin Store / Plating Shed
7	Winter Maintenance and Gritter Garage
8	Gatehouse
9	Salt Store (Requirement to be confirmed)

5.17.7 Battery Back-up

Battery back-up shall be provided to power the system for 24-hours standby, 30-mins full load.

5.17.8 Fault Monitoring & Indication

The system shall be continuously monitored for faults and provide audible and visual fault indication at the main control panel and BMS head end PC via a common fault signal.

It shall be possible to interrogate the fire alarm system data log at the BMS head end PC.

5.17.9 Automatic Detection

Automatic detection shall be provided in accordance with BS 5839-1 and the specified system category.

5.17.10 Void Detection

All ceiling voids at or over the minimum recommended height defined by BS5839 are to be fitted with void detection.

5.17.11 Combined Optical Smoke & Heat Multi Sensors

Combined optical smoke and heat multi sensors shall be provided throughout unless stated otherwise.

It shall be possible to individually re-programme each multi sensor at the main fire alarm control panel.

Combined optical smoke and heat multi sensors shall be white.

5.17.12 Heat Sensors

Heat sensors shall be provided in any areas susceptible to false alarms caused by dust, steam etc.

Heat sensors shall be provided in car park, plant rooms, prep rooms and cleaner's cupboards.

Heat sensors shall be white.

5.17.13 Manual Call Points

Manual call points shall be provided so that a person does not have to travel more than 45m to reach one.

Manual call points shall be provided along the building escape routes and final exits.

Manual call points shall also be provided in areas with a high fire risk including plant rooms and Kitchen/Prep facilities if cooking provided.

Manual call points shall be red.

5.17.14 Alarm Sounders

Alarm sounders shall be provided throughout the building to achieve a minimum sound level of 65dB(A) or 5dB(A) above any ambient background noise level which exceeds 60dB(A) and not exceed 120dB(A) at any point.

Sound levels may be reduced to 60dB(A) in stairwells and any rooms with a floor area not exceeding 60m2.

Alarm sounder bases shall be used in areas with fire sensors providing sound levels are met.

Ceiling mounted sounders shall be provided in small toilet areas including accessible toilets.

Wall mounted sounders shall be provided in large toilets and positioned above the entry door.

Care shall be taken to avoid positioning sounders too close to firefighting communication points and disabled refuge locations.

Alarm sounders shall be white.

5.17.15 Visual Alarm Devices (VAD's)

VAD's shall be provided in locations with high ambient background noise levels including Biffa Workshop, plant room and all areas of the where people may be alone including toilets, wash rooms and shower rooms.

VAD's shall comply with the requirements of BS EN 54-23.

VAD's in toilet areas shall be positioned directly above the entry door.

VAD's shall be white.

5.17.16 Alarm Signalling System

The system shall be linked to a 24-hour off site monitoring station via a 'BT Redcare GSM IP' alarm signalling system. Location of monitoring station to be advised.

5.17.17 Plant Isolation Key Switch

A 'Plant Isolation' key switch shall be provided adjacent to the control panel to enable selected plant to be isolated during routine testing procedures.

5.17.18 Cabling & Containment

Refer to the cabling and containment section.

5.17.19 Power Supplies

Power supplies shall be provided as required by the system specialist.

Power supply requirements include;

- A 230V power supply for the main control panel.
- A 230V power supply for each node panel.

5.17.20 Data Connections

A 1G RJ45 data outlet shall be provided at the main control panel.

5.17.21 System Interfaces

The fire alarm system shall interface with the other building systems to provide the following functions;

- Isolate gas supplies.
- Shut down ventilation plant.
- Operate any fire dampers.
- Release door access control locks.
- Receive signals from other fire sensing systems.
- Signal the BMS system.
- Signal / receive signals from adjacent FA systems.

5.18 Aspirating Fire Detection System

5.18.1 Scope & Objectives

ASD systems shall be provided to protect the following areas;

- MCC – Storage and Independent User
- Biffa - Main Workshop/Platting Shed/Bin Store
- Sublet Unit

5.18.2 System Components

- ASD control units.
- Aspirating pipework.
- Pipework test points.
- Power Supplies
- System interfaces.

5.18.3 Detection Capability

ASD systems shall be capable of detecting air particles produced by combustion, electrical arcing and overheating as well as being able to differentiate between a real fire condition and false alarm caused by dust, water vapour, air currents and thermal changes.

5.18.4 ASD Control Units

Multi-zone ASD control units shall be provided to protect the areas described above.

5.18.5 Battery Back-up

Battery back-up shall be provided to power the system for 24-hours standby, 30-mins full load.

5.18.6 Fault Monitoring & Indication

The system shall be continuously monitored for faults and provide audible and visual fault indication at the main control panel and BMS head end PC via a common fault signal.

5.18.7 Aspirating Pipework

Air sampling pipework shall be installed within the protected space to provide the necessary coverage.

The reasoning for this approach is that heat detection would not comply due to the height of the apex so aspirating system or beam detectors would be then proposal. However, due to the environment and nature of these works the system would need to be isolated during working hours to prevent false alarms from exhaust fumes and welding.

The isolation would be done via timer or key switch.

5.18.8 Pipework Test Points

Test points shall be installed within accessible locations for routine testing and maintenance.

5.18.9 Power Supplies

Power supplies shall be provided as required by the system specialist.

Power supply requirements include; - A 230V power supply for each control unit.

5.18.10 System Interfaces

Multi-relay interface units shall be provided to enable each port to be individually sub-addressed / zoned and linked to the main building fire detection and alarm system.

5.18.11 Certified Installer

A ‘LPS1014’ certified installer shall be employed to design, install, test and commission the system.

5.19 Emergency Assistance Alarm System

5.19.1 Scope & Objectives

An emergency assistance alarm system shall be provided in each accessible toilet and shower to comply with the requirements of Approved Document M 'Access to and use of buildings'.

5.19.2 System Components

- Alarm systems.
- Master station.
- Repeat indication.
- Cabling and containment.
- Power supplies.
- System interfaces.

5.19.3 Alarm System

Emergency assistance alarm systems shall comprise of the following;

A 'red' ceiling mounted pull cord c/w two bangles, one at 100mm AFFL and the other at 900mm AFFL, located adjacent the pan.

A flush mounted reset button c/w reassurance light located adjacent to and within easy reaching distance of the pan.

A local over door lamp / buzzer unit located outside the WC positioned above the door.

A local controller / PSU located within the accessible ceiling void of the WC.

5.19.4 Reception Desk Master Station / Indicator

Emergency assistance alarms shall be displayed at the nominated desk / area for the main MCC office and main entrance reception desk of Biffa unit.

5.19.5 Power Supplies

Power supplies shall be provided as required by the system specialist.

Power supply requirements include;

- A 13A 230V power supply for each local controller / PSU.
- A 13A 230V power supply for the master station.

5.19.6 System Cabling

- TBC by the specialist.

5.20 Hearing Enhancement System

5.20.1 Scope & Objectives

An induction loop system shall be provided at the nominated desk / area for the main MCC office and main entrance reception desk of Biffa unit to comply with the requirements of Approved Document M 'Access to and use of buildings'.

5.20.2 Reception Desk Induction Loop

The induction loop system shall comprise of the following;

- PSU / amplifier installed on the staff side below the desk.
- Microphone installed on the staff side above the desk.
- Induction loop on the public side fixed to the u/s of the desk

5.20.3 Meeting Rooms Induction Loop

There may be a requirement to install induction loops in all or a single nominated meeting room but this shall be determined at the next stage once further discussions have taken place with MCC (TBC)

For the purpose of tender pricing - 2no meeting room's installations shall be included.

5.20.4 Power Supplies

Power supplies shall be provided as required by the system specialist.

Power supply requirements include;

- A 13A 230V power supply for the amplifier / PSU.

5.20.5 Cable Specification

All line level input cabling will be carried out using a screened multi-core cable. All microphone cabling will be carried out using a screened multi-core cable.

Microphone cables must be separated from any other cables by a minimum of 300mm in accordance with BS 6259.

All master to slave infra-red radiator cabling will be carried out using a 50 Ohm coaxial cable.

5.21 Security Systems Overview

5.21.1 Manned Security

The site shall have security 24-hours / day, 7-days/week, 365-days a year.

Access to the site shall be via main gatehouse building at the site entrance.

5.21.2 Opening Hours

The opening hours TBA with the client.

5.21.3 Off-Site Communications

Security systems shall be capable of being controlled and monitored from an off-site control station, all necessary equipment shall be provided to the off-site control centre to provide full access on handover of the entire site.

The list of systems below shall include a hard wired connection to the off-site control centre.

- Intruder alarm system; keypad set / unset alarm facility and alarm notification.
- CCTV surveillance system; CCTV camera monitoring and camera selection including PTZ control.
- Access control system; system monitoring and control of access permissions.

5.22 Intruder Alarm System

5.22.1 Scope & Objectives

An intruder detection and alarm system shall be provided to detect unauthorised access within the building and raise the alarm.

All offices and workshop areas are to have motion detection devices and door contacts to all external doors.

Each area shall have keypad along with total control from the Gatehouse.

All Three systems Intruder, access control and CCTV shall integrate with each other to allow cameras to move to pre-set positions

5.22.2 System Grade

All system components shall meet the requirements of a 'Grade 3' system.

5.22.3 Confirmed Alarm Signal

A 'Confirmed Alarm Signal' shall be achieved using the 'Sequential' verification method i.e. 2nr separate devices triggered in sequence.

5.22.4 System Components

- Control panel.
- Zone expansion units.
- Keypad / display.
- Motion sensors.
- Door contacts.
- Internal alarm sounder.
- External alarm sounder.
- Cabling and containment.
- Power supplies.
- Data connections.

5.22.5 Control Panel

The control panel shall be located within a 'protected area' of the building i.e. lockable plant room or services cupboard.

5.22.6 Battery Back-up

A battery and battery charger unit shall be provided according to the selected system grade.

Zone Expansion Units

Zone expansion units shall be provided where necessary to extend the system and connect additional devices. The system shall be capable of being expanded by at least 25%.

5.22.7 Keypad

A keypad c/w integral proximity reader shall be provided in a location that is near the main building / unit entrance and hidden from general view. This shall be for individual access to each unit as they may be occupied at different times.

5.22.8 Motion Sensors

Dual technology motion sensors combining infrared and microwave technology shall be provided to detect movement and limit false alarms.

The coverage shall include access via external windows, doors in addition to roof lights.

5.22.9 Door Contacts

Flush mounted magnetic door contacts shall be provided at designated doors to detect forced entry.

Surface magnetic contacts shall only be used where it is not possible to fit flush contacts.

5.22.10 Internal Alarm Sounder

A self-actuating bell shall be provided in the MCC main entrance reception, preferably located local to the keypad.

5.22.11 External Alarm Sounder

An external sounder / strobe unit c/w anti-tamper and anti-foam shall be provided at high level on the building exterior.

5.22.12 Alarm Transmission System (ATS)

The system shall be linked to a 24-hour monitoring centre via a 'BT Redcare GSM IP' alarm signalling system.

5.22.13 Spare Capacity

The system shall be capable of being expanded and include a minimum 25% spare capacity for additional devices.

5.22.14 Tamper Alarm

Unauthorised tampering with the system shall result in the activation of the alarm.

5.22.15 Key Fobs

30nr pre-programmed key fobs shall be provided free issue prior to handover.

5.22.16 Power Supplies

Power supplies shall be provided as required by the system specialist.

Power supply requirements include;

- A 230V power supply for the main control panel.
- A 230V supply for each zone expander.

5.22.17 Data Connections

Data connections shall be provided as required by the system specialist.

Data connection requirements include;

- A 2G RJ45 data outlet at the control panel.

5.22.18 Cabling & Containment

- Refer to the cabling and containment section.

5.22.19 Certified Installer

An 'NSI Gold' certified installer shall be employed to design, install, test and commission the system.

5.22.20 Maintenance / Preferred Supplier

The intruder alarm is to be maintained by Manchester Councils maintenance contractor, MCC have stated a requirement previously that control equipment shall be as follows: -

Texecom Premier or Premier Elite Series, with a Tag RKP and ID expanders to suit Texecom Ltd
St Crispin Way, Haslingden, Lancashire, BB4 4PW
Tel: 01706 234800

5.23 CCTV Surveillance System

5.23.1 Scope & Objectives

An IP CCTV surveillance system shall be provided to ensure security to the individual buildings and wider site operations.

5.23.2 Scope & Objectives

- BS EN 50132 'CCTV Surveillance Systems for use in Security Applications'.
- Data Protection Act.
- NSI code of practice for design, installation and maintenance of CCTV surveillance systems
- Graded requirements under BS EN 62676 Standards for CCTV

5.23.3 System Type

IP based CCTV surveillance system with onsite recording and monitoring via Gatehouse in addition to the facility for off-site monitoring via a hardwired link to the off-site control centre.

5.23.4 Overview of CCTV coverage

- Gatehouse / Entrance barrier access to site
- Perimeter of the main building
- Perimeter of the wider main site areas covering ancillary buildings / areas.
- Open car park area
- Main MCC entrance / reception desk

5.23.5 ANPR CCTV Cameras

ANPR camera coverage has been stated as a requirement at the entry barriers to the site and as such a system complying with these type of CCTV camera specification is to be included with the tender return.

5.23.6 System Components

- NVR.
- Client PC's.
- System software.
- CCTV Cameras.
- Signage.
- Log book.
- Cabling and containment.
- Power supplies.
- Data connections.

5.23.7 Network Video Recorder (NVR)

The NVR hard drive shall be sized to suit the number of cameras, image quality, frame rate and recording time and include a minimum 25% spare capacity to facilitate the future connection of additional cameras.

- Recording frame rate; 12FPS normal increasing to 25FPS on activation.

- Recording time; 24-hours / day for 31-days.

The NVR recorder shall have a solid state hard drive, fascia control buttons, USB 2.0 ports, DVD RW drive, embedded operating system, simultaneous record / playback / network / archive functions, remote access software, USB mouse and keyboard.

The NVR shall be the rack mounted type and housed within the main site security network cabinet.

5.23.8 System Hardware

Hardware shall be provided as necessary to operate the system within the building and off-site control centre. Hardware may be required to be located in any alternative location to gatehouse due to limited space within the gatehouse.

During the tender period the main contractor shall review the system requirements with the client and potential alternative locations as necessary.

Any existing Manchester Council data networks cannot be used for connection to the CCTV equipment and a separate wiring network is to be installed.

5.23.9 System Software

Software shall be provided as necessary to operate the system within the building and off-site control centre.

5.23.10 Camera Selection & Monitoring Positions

CCTV system shall be monitored in the Gatehouse and this is also were the Security guard shall view and control the system from, the hard disk recorder and control equipment may be located elsewhere due to the lack of space in the gatehouse.

The Gatehouse shall have 2x24” HD monitors to view the system along with joystick control.

5.23.11 Camera Selection

Dome cameras shall be high resolution, auto colour and monochrome, true day / night with varifocal optical zoom lens, 3-axis gimbal (360° pan and 90° tilt), vandal resistant cast aluminium enclosure and polycarbonate dome.

External dome cameras shall have an IP66 weatherproof vandal resistant housing with integral heater and infrared LED (where required).

Cameras which are exposed to high levels of light contrast such as those aimed at external doors shall employ wide dynamic range (WDR) technology enabling both the bright and dark objects to be visible.

External CCTV cameras shall be fixed type at the gatehouse building with PTZ cameras provided to cover the general car park and perimeter areas to allow some operational flexibility for the security staff within the lodge. Central 6m columns shall have protection installed below cameras to protect against vandalism or tampering.

5.23.12 Cabling & Containment

All CCTV cameras are to be wired in fibre optic OM4 cable back to the Gatehouse.

Refer to the cabling and containment section.

5.23.13 Power Supplies

Power supplies shall be provided as required by the system specialist.

Power supply requirements include;

- A 230V power supply for the NVR.

- CCTV cameras shall have POE connections however if distance is an issue and a power supply is required these shall be included within the tender return.

5.23.14 Data Connections

Data connections shall be provided as required by the system specialist.

Data connection requirements include;

- A 1G RJ45 data outlet for each camera.

5.23.15 Certified Installer

An 'NSI Gold' certified installer shall be employed to design, install, test and commission the system.

5.24 Access Control System

5.24.1 Scope & Objectives

A new access control system shall be provided to the site to ensure full secure access control is provided to the entire site / associated buildings.

The main site entrance shall be protected via automated gates / barriers and controlled via the main Gatehouse.

- New Visitors - Intercom operation between gatehouse staff and new visitors prior to entry.
- Regular Staff – Entry shall be via allocated fob entry.

Access control systems shall be provided to control and monitor access at designated points around the site and individual entry points to the main and ancillary buildings.

In previous discussions with MCC FM team it had been stated that the Access Control System shall need to link into MCC main Graften System or whatever the main system is at time of installation.

Further co-ordination shall be required in the next stage to verify MCC system requirements.

5.24.2 System Type

Fully networked IP based access control system.

5.24.3 System Components

- Automated entry barriers
- System PC.
- System software.
- Desktop reader.
- Door controllers.
- Electric locks.
- Proximity readers.
- Exit switches.
- Break glass units.
- Proximity key cards and fobs.
- Cabling and containment.
- Power supplies.
- Data connections.

5.24.4 System PC

Software shall be installed on a PC to enable control, monitoring and administration of the system.

5.24.5 System Software

System Software shall be provided as necessary to operate the system.

5.24.6 Desktop Reader

A desktop reader shall be provided to enable proximity cards to be programmed on site.

The desktop reader shall be located in the Gatehouse.

5.24.7 Desktop Card Printer

A desktop card printer shall be provided to enable proximity cards to be printed on site.

The desktop printer shall be located in the Gatehouse assuming space can accommodate the requirements.

5.24.8 Door Controllers

Door controllers shall be located within secure services cupboards and / or accessible ceiling voids (not directly over the door) on the secure side of the access control point.

Door controllers shall have integral battery backup.

5.24.9 Typical Access Control Point Arrangement

Manchester Council have a standard for door access equipment and as such any installation shall incorporate the use of Paxton net2 equipment with MiFare readers.

Access control points shall typically comprise of the following;

- An access control lock located at the head of the door.
- A proximity reader located on the non-secure side of the door.
- A proximity reader or push to exit button located on the secure side of the door.
- A green break glass located on the secure side of the door.
- A local system controller and PSU.

5.24.10 Electric Locks

Flush mounted electric locks shall be installed on all doors accept where the door or door frame design does not permit, in which case surface mounted electromagnetic locks shall be installed.

Electric locks shall 'fail open' in the event of an emergency.

Locks shall be supplied free issue to the main contractor / joiner for installation.

5.24.11 Proximity Readers

Proximity readers shall be provided where required to control access.

200nr pre-programmed 1K MIFARE proximity cards shall be provided free issue prior to handover.

Internal Readers

Readers shall be semi recessed with a coloured facia to the architect's specification.

Paxton MIFARE 'P200' or equal and approved.

External Readers

Readers shall be IPX7 with a cast metal finish to the architect's specification.

XXX 'MIFARE Metal Reader' or equal and approved.

5.24.12 Exit Switches

Exit switches shall be provided where required to allow manual egress.

Exit switches shall be semi recessed with black or white fascia to architects specification.

Paxton 'E75' or equal and approved.

5.24.13 Break Glass Units

Break glass units shall be provided to release door locks in the event of an emergency.

Break glass units shall be semi recessed and colour coded green.

5.24.14 System Interfaces

The access control system shall be interfaced with the fire alarm system to automatically release all electronic locks in the event of a fire alarm.

5.24.15 Power Supplies

Power supplies shall be provided as required by the system specialist.

Power supply requirements include;

- A 230V power supply for each door controller.

5.24.16 Data Connections

Data connections shall be provided as required by the system specialist.

Data connection requirements include;

- A 1G RJ45 data outlet for each door controller.

5.24.17 Cabling & Containment

- Refer to the cabling and containment section.

5.24.18 Certified Installer

An ‘NSI Gold’ certified installer shall be employed to design, install, test and commission the system.

5.25 Incoming Telecoms

5.25.1 Scope & Objectives

The existing BT incoming location shall be retained and utilised to re-supply the site requirements – incoming capacity shall be reviewed to ensure suitability for new scheme requirements.

MCC ITC team are also reviewing the network requirements at present and understand there may also be some upgrade to infrastructure – details to be confirmed.

5.25.2 BT Redcare GSM Telephone Lines

BT Redcare GSM telephone lines shall be provided for the following;

- Fire alarm system.
- Intruder alarm system.

5.25.3 Standard BT Telephone Lines

Standard BT telephone lines shall be provided for the following;

- Gatehouse
- MCC Reception desk.
- Biffa Reception Desk

5.25.4 Contractors Responsibility

The contractor shall organise for the installation of all telephone lines on behalf of the client.

All incoming telephone lines shall be installed, tested and commissioned prior to hand-over.

5.26 ICT Structured Wiring Network

5.26.1 Scope & Objectives

A dedicated data network shall be installed within the building to allow the intelligent systems to be integrated onto a common network.

A general description of intent has been detailed below but further client discussions shall be required during the next stage to fully understand and detail the client requirements for the building / overall site operations.

It is understood that MCC have a dedicated ICT team which is also developing design requirements for this project and full co-ordination shall be required with the MCC Team to ensure all requirements are either provided by MCC directly or included within the project in line with the building / tenant operational requirements.

Decommissioning and Logistics of any current alterations are to be developed further with MCC and all design shall need to be approved by MCC ICT design team.

Our current understanding and allowances are as detailed in the following paragraphs below:-

5.26.2 ICT Passive Equipment

ICT Passive equipment shall be provided by the contractor

5.26.3 ICT Active Equipment

ICT Active equipment shall be provided by the client

5.26.4 Networked Systems

- Building Management System.
- Intruder Alarm System.
- CCTV Surveillance System.
- Access Control System.
- Intercom Entry System.
- Wireless Network.
- Client PC’s
- Telephone System.

5.26.5 Rack Mounted Equipment

Rack mounted equipment to be provided by the ICT specialist;

- Patch cabling.
- POE switches.
- Main Comms.
- Power supplies.
- UPS system (5min duration).
- Cable management.

5.26.6 Telecoms Equipment

Space shall be provided in the rack for the incoming telecoms equipment.

5.26.7 Main Comms

The ICT specialist shall provide a rack mounted Comms to host required systems software;

- Access control system software.
- Intercom entry system software.

5.26.8 Wireless Controller

A rack mounted wireless controller shall be installed to provide central control, management and optimisation of the wireless network.

5.26.9 UPS

A rack mounted UPS system shall be installed to serve the landlords building network cabinet.

The UPS system shall be sized to support the cabinet load for a minimum duration of 5-mins.

5.26.10 Client PC's

Client PC's shall be provided as follows;

- 1nr in the Gatehouse office.
- 2nr at the main entrance reception desks for both MCC and Biffa.

5.26.11 Client Telephones

Telephones shall be provided as follows;

- 1nr standard telephone handset in the Gatehouse.
- 1nr multifunctional telephone handset at the main MCC entrance reception desk.
- 1nr standard telephone handset at the main Biffa entrance reception desk.

5.26.12 Network Cabling Category

Category 6 U/FTP (Unscreened Outer with individual Screened Foil Twisted Pair) cabling system shall be provided conforming to TIA/EIA standards until further details advised by client.

5.26.13 Data Network Cabinets

Current allowance shall be for the installation of 2No Data network cabinets to house all active and non-active equipment and provided in the following locations:-

- No 1 - MCC Comms room - (16m2) - Central office area
- No 2 - Biffa Comms room - (16m2) - Central office area.

The maximum cable distance between the data network cabinet and any RJ45 data outlet point shall be 90m which allows 5m at either end for cable patching and final connections. This allowance of two strategically positioned cabinets shall also ensure any 90m cable restrictions shall not be compromised.

Comms rooms shall be fitted with appropriate access control restrictions, however no signage shall be provided to identify that the room is in fact a Comms room.

Each Comms room shall be provided with ventilation and cooling installation which shall be detailed within the mechanical section of this specification. Mechanical Services installation provided by the mechanical contractor with all associated electrical installation provided by electrical contractor.

Data network cabinet for MCC shall comprise of a 42U 800mm wide x 1000mm deep aluminium framed floor standing Comms cabinet's c/w key lockable mesh front and rear access doors, lockable side panels, 100mm plinth, 2nr 10-way PDU's (A&B Feed), earth kit and 4-way cooling fan.

Data network cabinet for Biffa shall comprise of a 27U 800mm wide x 1200mm deep aluminium framed floor standing Comms cabinet's c/w key lockable mesh front and rear access doors, lockable side panels, 100mm plinth, 2nr 10-way PDU's (A&B Feed), earth kit and 4-way cooling fan.

5.26.14 Dual Supplies

Each data cabinet shall be provided with dual supplies via commando socket installation with PDU to include surge protection for all data cabinets to prevent damage to sensitive equipment.

5.26.15 Cabinet clean Earth Bonding

Each cabinet shall have a 10mm clean earth installed and bonded to the base of the cabinet.

5.26.16 Data Network Wiring / Cabinet Patching

- Grey – Data Only
- Green – AV
- Red - BMS
- Black – Misc.
- Yellow - Security
- Blue – Crossover

5.27 Wireless Network

5.27.1 Scope & Objectives

A wireless network shall be installed to provide wireless coverage throughout all areas of the main building.

5.27.2 Wireless Access Points (WAP's)

Wireless access points shall be carefully positioned in order to avoid signal interference.

5.27.3 Wireless Survey

A wireless site survey shall be carried on site at a suitable point in the construction programme in order to determine the exact number and location of wireless access points.

5.27.4 Power Supplies

Power supply requirements include;

- A 230V power supply for the wireless controller.
- WAP's shall have POE connections.

5.27.5 Data Connections

Data connections shall be provided as required by the system specialist.

Data connection requirements include;

- A 1G RJ45 data outlet for each WAP.

5.28 Client PC's

5.28.1 Scope & Objectives

Client PC's shall be provided to act as a user interface for the networked building systems.

PC hardware and software specification shall be suitable for use with the building systems.

5.28.2 Allocation of Client PCs

Client PC 1

Location	Gatehouse
Desktop PC	Yes, see spec below
Keyboard	USB keyboard
Mouse	USB optical mouse
Monitors	3 x 24''adjustable monitors
Software	As required

Client PC 2

Location	MCC Reception / Nominated Desk
Desktop PC	Yes, see spec below
Keyboard	USB keyboard
Mouse	USB optical mouse
Monitors	2 x 24''adjustable monitors
Software	As required

Client PC 3

Location	Biffa Reception Desk
Desktop PC	Yes, see spec below
Keyboard	USB keyboard
Mouse	USB optical mouse
Monitors	2 x 24''adjustable monitors
Software	As required

5.28.3 PC Specification

Minimum PC specification;

Class	Workstation Class
Processor	Intel Core i5 4C/4T
Memory	16GB Dual Channel DDR4 Memory
Graphics	NVIDIA or AMD Professional Graphics Card
Storage	512GB
Optical	DVD/RW Optical Drive

5.29 Cabling & Containment

5.29.1 Containment Network

A network of cable ducts, ladder, tray, basket, trunking and conduit shall be provided for the installation of main and sub-main power cabling, final circuit power cabling, life safety and fire alarm cabling, ELV cabling, incoming telecoms cabling and structured wiring (data) cabling.

All cables shall be supported throughout their length to protect against mechanical strain.

5.29.2 Surface Areas

Horizontal and vertical cabling and containment installations shall be surface fixed and visible in the space.

5.29.3 Flush Areas

Horizontal and vertical cabling and containment installations shall be fully concealed and hidden from view.

Horizontal cabling and containment shall be installed within ceiling voids, floor voids, service ducts and conduits where possible or on show in open ceiling areas.

Vertical cabling and containment shall be installed within service risers, service ducts and wall conduits again where possible or on show in open ceiling areas.

5.29.4 Cable Separation

Cable separation shall be maintained by the use of dedicated containment systems and / or compartmentalised tray and basket (via metal dividers) and multi-compartment trunking.

A minimum separation distance of 300mm shall be maintained between power and data wiring.

5.29.5 Dedicated Containment

As a minimum dedicated cable containment systems shall be provided for the following;

- Main and sub-main power distribution cabling.
- Final circuit small power and lighting cabling.
- Fire alarm and cabling.
- Extra low voltage (ELV) cabling.
- Incoming telecoms cabling.
- Data network cabling.

5.29.6 Containment Support System

A proprietary ‘Unistrut’ metal framing support system complete with channel, clamps, fixings and fittings shall be installed to support all cable containment, ventilation ducts and pipework.

5.29.7 Conduit Diameter

20mm conduit shall be the minimum size used for wall drops and to make final connections.

5.29.8 Single Cable Run

Any cable route containing only a single cable shall be classed as a ‘Single Cable Run’.

Where permitted single cable runs shall be clipped direct to the structure using metal clips.

5.29.9 Minimum Conductor Size

The minimum conductor size used shall be 1.5mm2.

5.29.10 Cable Approval Bodies

Only cables approved by the following approval bodies shall be installed;

- BASEC 'British Approvals Service for Cables'.
- LPCB 'Loss Prevention Certification Board'.
- BSI 'British Standards Institution'.
- ACI 'Approved Cables Initiative'.

5.29.11 Cable Quality & Markings

All cabling shall display the following markings;

- Manufacturers Name.
- Applicable British Standard.
- Approval Body Mark.
- Harmonised Cable Mark.
- Conductor Size (CSA).
- Year of Manufacture.
- Origin of Manufacture.

5.29.12 Power Cabling & Containment

Incoming Supply Cabling

ENWL to provide in line with their own specification.

Internal Sub-Main Cabling

Sub-main cabling routed internally shall comprise of multi-core XLPE/SWA/LSZH insulated cables installed on heavy duty galvanised steel cable tray along route running full length of main building and heavy duty cable basket for all other branch routes.

External Sub-Main Cabling

Sub-main cabling routed externally shall comprise of multi-core XLPE/SWA/MDPE insulated cables installed underground direct buried and / or in underground cable ducts.

Any cables passing under hard standings, footpaths, vehicle lanes etc. shall be ducted.

Fire Rated Sub-Main Cabling (Essential Supplies)

Essential supply sub-main cabling shall comprise of enhanced grade (120min) fire rated cabling installed on dedicated galvanised steel cable basket.

Final Circuit Cabling in Surface Areas

Final circuit cabling installed within surface areas shall comprise of Multi-core LSZH insulated (Twin & Earth) cables installed on steel wire cable basket with galvanised steel conduit drops to equipment.

Final Circuit Cabling in Flush Areas

Final circuit cabling within flush areas shall comprise of multi-core OHLS / OHLS flexible cables with full sized CPC installed on steel wire cable basket for primary routes of two or more cables.

Single routed cables may be clipped direct to the building structure

Drops down walls to flush wall mounted accessories and equipment shall be in earthed galvanised steel conduit.

Drops down walls to flush wall mounted accessories and equipment in PVC conduit shall have RCD protected final circuits.

Final Circuit Cabling in Flush Areas with Exposed Soffits

Final circuit cabling installed within flush areas shall comprise of multi-core LSZH/LSZH insulated cables with full sized CPC installed on galvanised steel cable basket.

Any wiring exiting a cable tray shall be installed in galvanised steel conduit throughout its length to a surface mounted conduit box located directly above or adjacent to the equipment / luminaire.

Final luminaire connections shall be carried out using conduit box mounted plug and sockets.

Drops down walls to flush wall mounted back boxes shall be installed be in earthed galvanised steel conduit or impact resistant PVC conduit if the circuit is protected by an RCD.

External Final Circuit Cabling (Below Ground)

External final circuit cabling shall comprise of multi-core XLPE/SWA/MDPE cables installed direct buried in the ground and / or in cable ducts.

Fire Rated Final Circuit Cabling (Essential Supplies)

Essential supply final circuit cabling shall comprise of multi-core enhanced grade (120min) fire rated cabling installed on dedicated containment as per the installation methods described.

5.29.13 Multi-Compartment Dado Trunking

Dado trunking shall be suitable for the installation of CAT 6 structured cabling installations.

5.29.14 Fire Alarm & EVCS Cabling & Containment

Fire alarm and EVCS cabling shall be provided in accordance with BS 5839-1 ‘Fire detection and fire alarm systems for buildings. Code of practice for design, installation, commissioning and maintenance of systems in non-domestic buildings’.

Dedicated containment systems shall be provided for the installation of fire alarm cabling.

Network cabling; 2 x 2C 1.5mm2 enhanced grade fire rated cabling c/w red sheath.

Circuit cabling; 1 x 2C 1.5mm2 enhanced grade fire rated cabling c/w red sheath.

ELV Cabling & Containment

ELV system cabling specifications shall be confirmed by the relevant system specialists.

Dedicated containment systems shall be provided for the installation of ELV cabling.

Cabling in Surface Areas

Primary Cable Routes; cables installed on galvanised steel basket.

Single Cable Route; cable installed in galvanised steel conduit.

Wall Drops; cable installed in galvanised steel conduit.

Cabling in Flush Areas

Primary Cable Routes; cables installed on galvanised steel basket.

Single Cable Route; cable installed in galvanised steel conduit or clipped direct.

Wall Drops; cable installed flush in galvanised steel conduit or impact resistant PVC conduit.

Cabling in Flush Areas with Exposed Soffits

Primary Cable Routes; cables installed on galvanised steel basket.

Single Cable Route; cable installed in galvanised steel conduit to a conduit box mounted directly behind the sensor or alarm device.

Wall Drops; cable installed flush in galvanised steel conduit or impact resistant PVC conduit.

5.29.15 Incoming Telecoms Containment

Dedicated containment systems shall be provided for the installation of telecoms cabling.

5.29.16 Data Network Cabling & Containment

Dedicated containment systems shall be provided for the installation of data network cabling.

Cabling in Surface Areas

Primary Cable Routes; cables installed on steel wire cable basket.

Single Cable Route; cable installed in galvanised steel conduit.

Wall Drops; cable installed in galvanised steel conduit.

Cabling in Flush Areas

Primary Cable Routes; cables installed on steel wire basket.

Single Cable Route; cable installed in galvanised steel conduit or clipped direct.

Wall Drops; cable installed flush in galvanised steel conduit or impact resistant PVC conduit.

Cabling in Flush Areas with Exposed Soffits

Primary Cable Routes; cables installed on galvanised steel basket.

Single Cable Route; cable installed in galvanised steel conduit to a conduit box mounted directly behind the RJ45 data outlet.

Wall Drops; cable installed flush in galvanised steel conduit or impact resistant PVC conduit.

Cabling in Floor

Primary Cable Routes; cables installed in steel Trunking.

Single Cable Route; cable installed in steel conduit.

5.30 Miscellaneous

5.30.1 Area Designation in relation to Cabling & Containment Installations

Surface Areas

- Plant Room.
- Cleaners Cupboards.
- Floor Voids.
- Ceiling Voids.
- Service Voids.
- Areas without ceilings

Flush Areas

All services installed within flush areas with ceilings shall be concealed within the building fabric.

5.30.2 Area Designation in relation to Wiring Accessory Finishes

Enhanced Areas

- Office Areas.
- Main Entrance.
- Reception.
- Toilet Areas.

Surface Areas

- Plant Rooms.
- Cleaners Cupboards.
- Floor Voids.
- Ceiling Voids.
- Service Voids.

Wet Areas

- Areas containing Showers

External Areas

- All External Areas.
- Unheated Spaces (susceptible to high levels of moisture).

All Other Areas

Remaining rooms and areas.

5.30.3 Environmental Protection

All building services plant, equipment, switchgear, wiring accessories, luminaires, cabling and containment shall be suitable for the environment in which it is installed and suitably IP rated to protect against the ingress of solid objects and liquids.

5.30.4 Wiring Accessories

Wring accessories shall be installed in accordance with Approved Document M.

Wiring accessories shall be selected according to the area in which they are installed;

Area Designation		Wiring Accessory Finish
Enhanced Areas-	Brushed stainless steel c/w black inserts (FRA to confirm)	
Surface Areas	-	Impact resistant metal clad.
Wet Areas	-	IP56 rated moulded plastic.
All Other Areas	-	Brushed stainless steel c/w black inserts. (FRA to confirm)

Wiring accessories typically include;

- Socket outlets.
- Connection units.
- Double pole switches.
- Control switches.
- Light switches.
- Dimmer switches.
- Telephone outlets.
- RJ45 data outlets.
- TV / satellite outlets.
- Grid front plates.
- Grid modules.

5.30.5 Identification & Labelling

Switchgear Labelling

Engraved traffolyte labels shall be used to label all main items of electrical switchgear.

Labels shall be white with black text and contain pre-drilled fixing holes for panel mounting.

Plant Supplies

A label displaying the following shall be fixed to the front of each plant supply isolator;

- Unique load reference (MCP1)
- Isolator rating and poles (315A TPN ISOLATOR)
- Supply source reference (FED FROM MSB1)
- Supply cable size and type (4C 240mm2 XLPE/SWA/ZHLS + 120mm2 CPC)

Main LV Switchboard

A label displaying the following shall be fixed to the front of the main LV switchboard;

- Unique board reference.
- Board rating
- Supply source reference.
- Supply cable size and type.

MCCB / MCB Distribution Boards

A label displaying the following shall be fixed to the front door of each MCB distribution board;

- Unique board reference.
- Board rating
- Number of outgoing ways.
- Supply source reference.
- Supply cable size and type.

Cable Identification Tags

Cable identification tags shall be fitted to all main and sub-main cables to display the cables unique circuit reference.

Cable identification tags shall be provided at the source i.e. the outgoing cables in the main LV switchroom and the cable termination point (load).

Circuit Charts

Laminated typed circuit charts shall be securely fixed to the inside door of each MCCB panel board and MCB distribution board.

5.30.6 Pattress Boards

Fire retardant timber pattress boards shall be provided to support all ceiling mounted services.

5.30.7 Sample Equipment

A working sample of the following shall be provided for the client to approve and sign-off.

- Each general and emergency luminaire type.
- All lighting control sensors and switches.
- All types of wiring accessory finishes.
- All access control readers and devices.

5.30.8 Mounting Heights

All switches, outlets and controls shall be installed in accordance with Approved Document M.

Item		Mounting Height
Low Level Socket	-	450mm AFFL (to the underside of the socket).
Socket mounted above a Worktop	-	150mm above the worktop (to the underside).
Light Switch	-	1200mm AFFL (to the top of the control switch).
Distribution Board	-	2000mm to the top of the distribution board or 100mm below the cupboard door opening (whichever is the lowest).
Dado Trunking	-	100mm above the desk (to the underside of the trunking) or 100mm below the desk (to the top of the trunking) as required. Architectural Setting Out

Refer to the architect's interior design information for detailed setting out requirements.

Appendices

Appendix 1 - Approved Manufacturers & Suppliers

Appendix 2 - Approved System Installers

Appendix 3 - Electrical Equipment Connection Schedules

Appendix 4 - Proposed Luminaire Schedules

Appendix 5 - ICT Responsibilities Interface Matrix

Appendix 6 - Lighting Control Methodology & Equipment Schedules

Appendix 7 - CCTV System Equipment Schedule

Appendix 8 – Fire Alarm & Aspirating System Equipment Schedule

Appendix 9 – EVC Equipment - Staff Provision

Appendix 10 – Accessible Toilet Alarm Equipment Schedule

Appendix 11 – Induction Loop Equipment Schedule

Appendix 12 – Access Control & Intercom Equipment Schedule

Appendix 13 – Intruder Alarm System Equipment Schedule

Appendix 1 – Approved Manufacturers & Suppliers

Appendix 1 - Approved Manufacturers & Suppliers – Electrical Services

HV Distribution Switchgear

1.	Schneider Electric	Chris Kennedy 07739 242776
2.	Eaton (MEM)	
3.	ABB Switchgear	

LV Distribution Switchgear

4.	Schneider Electric	Chris Kennedy 07739 242776
5.	Eaton (MEM)	

Isolators & Switch Disconnectors

6.	Schneider Electric	Chris Kennedy 07739 242776
7.	Eaton (MEM)	

Power Distribution Busbar

8.	Schneider Electric	Chris Kennedy 07739 242776
9.	Eaton (MEM)	

Street Lighting Equipment

10.	Schreder Urbis	PeterC@urbis-schreder.com
11.	Lucy	

Power Factor Correction

12.	Schneider Electric	Chris Kennedy 07739 242776
13.	Eaton (MEM)	

Surge Protection Devices

14.	Schneider Electric	Chris Kennedy 07739 242776
15.	Furse	
16.	Eaton (MEM	

Lightning Protection System

17.	Santon	Santon.lps@btconnect.com (Simon Foster)
18.	Furse	
19.	BEST	

Energy Metering

20.	Schneider Electric	Chris Kennedy 07739 242776
21.	Eaton (MEM)	
22.	Autometers	

Command & Control Devices

23.	Schneider Electric	Chris Kennedy 07739 242776
24.	Eaton (MEM)	

Uninterruptible Power Supply Systems

25.	Emerson (Chloride)	
26.	Riello	
27.	Schneider (APC)	

Hand Dryers

28.	Dyson	
29.	Mitsubishi	

Office Power

30.	Electrak (Legrand)	
31.	cmd (Powerplan)	

Internal Lighting

32.	Whitecroft Lighting	Tim.Clark@whitecroftlight.com 07711 053864
33.	Trilux	

External Lighting

34.	Whitecroft Lighting	Tim.Clark@whitecroftlight.com 07711 053864
35.	Trilux	
36.	Urbis Schréder	

Lighting Controls

37.	CP Electronics	
38.	Simmtronic	Daniel.parker@simmtronic.com 07976 287464
39.	Delmatic	

Emergency Luminaires

40.	Whitecroft Lighting	Tim.Clark@whitecroftlight.com 07711 053864
41.	Emergi-lite	
42.	Eaton (Cooper)	

Fire Alarm System

43.	Protec	Steve.bell@protec.co.uk
44.	Siemens	

Fire Aspirating Systems

45.	Protec	Steve.bell@protec.co.uk
46.	Wagner	

Emergency Voice Communication System

47.	Protec	Steve.bell@protec.co.uk
48.	Baldwin Boxall	
49.	Siemens	

Emergency Assistance Alarm System

50.	Protec	Steve.bell@protec.co.uk
51.	Baldwin Boxall	
52.	Siemens	

Hearing Enhancement Systems

53.	C-Tec	
54.	Ampetronic	
55.	Univox	

Intruder Alarm System

56.	Paxton	
57.	Texecom	

CCTV Surveillance Cameras

58.	Hikvision	
59.	Axis	
60.	Schneider (Pelco)	

Access Control System

61.	Paxton	

Intercom Entry System

62.	Paxton	

Structured Wiring System

63.	Brandrex	
64.	Excel	
65.	Systimax	

Networking Equipment

66.	Cisco	
67.	HP	

Power and Wiring Cable

68.	AEI Cables	
69.	Cleveland Cable Company	
70.	Draka	

Cable Accessories

71.	BICON (BICC)	
72.	CMP	
73.	Hawke	

Containment Systems

74.	Legrand (Swift)	
75.	Metsec	
76.	Unistrut	

Cable Tray & Ladder

77.	Legrand (Swifts)	
78.	Metsec	
79.	Unistrut	

Cable Basket

80.	Legrand (Cablofil)	
81.	Marco	
82.	Unistrut	

Cable Trunking

83.	Legrand (Salamandre)	
84.	Metsec	
85.	Unistrut	

Floor & Perimeter Trunking

86.	Armorduct	
87.	Legrand	

Support Systems

88.	Legrand (Swift)	
89.	Metsec	
90.	Unistrut	

Wiring Accessories

91.	Schneider Electric	
92.	Eaton (MEM)	
93.	Legrand	

Wiring Accessories

94.	Legrand	
95.	Schneider Electric	

Front End PC

96.	Dell	
97.	HP	
98.	Lenovo	
99.	Workstation Specialist (Custom Build Specialist)	

Appendix 2 – Approved System Installers

Appendix 2 - Approved System Installers – Electrical Services

HV Electrical Works

1.	ENWL	Michelle.Range@enwl.co.uk 08433 114378
2.	Ameon Utility	JBarlow@ameon.co.uk 07595 412003
3.	FES (HV Services	

Lightning Protection System

4.	Santon	Anthony Bertenshaw 0161 351 7333
5.	Omega	
6.	Raiden	
7.	BEST	

Solar PV Installation

8.	SAS Energy	Stacey Stone 01732 866731 / 07792 204689
9.	Navitas Solar	Matt Woods 0114 2484228 / 07973 969285
10.	Solarcentury	

Fire Alarm System

11.	Protec Fire & Security	Steve.bell@protec.co.uk 07791 796373
12.	Mono Fire & Security	
13.	Black Box Fire & Security	

Disabled Refuge Communication System

14.	Protec Fire & Security	Steve.bell@protec.co.uk 07791 796373
15.	Mono Fire & Security	
16.	Black Box Fire & Security	

Emergency Assistance Alarm System

17.	Protec Fire & Security	Steve.bell@protec.co.uk 07791 796373
18.	Mono Fire & Security	
19.	Black Box Fire & Security	

Hearing Enhancement Systems

20.	Protec Fire & Security	Steve.bell@protec.co.uk 07791 796373
21.	Black Box Fire & Security	
22.	TG Baker Sound	

Intruder Alarm System

23.	Protec Fire & Security	Philip.wheeler@protec.co.uk 07970 243627
24.	Mono Fire & Security	
25.	Black Box Fire & Security	

CCTV Surveillance System

26.	Protec Fire & Security	Philip.wheeler@protec.co.uk 07970 243627
27.	Mono Fire & Security	
28.	Black Box Fire & Security	

Access Control System

29.	Protec Fire & Security	Philip.wheeler@protec.co.uk 07970 243627
30.	Mono Fire & Security	
31.	Black Box Fire & Security	

Intercom Entry System

32.	Protec Fire & Security	166560
33.	Mono Fire & Security	
34.	Black Box Network Services	

Structured Wiring System

35.	Black Box Network Services	
36.	ACI	
37.	Boston Networks	

Appendix 3 – Electrical Equipment Connection Schedules

System Category	Equipment Description	Circuit Details						Final Connection			
		Supply Board	CPD Type	Circuit Type	Cable Type	CPC Type	Install Method	Local Isolator	Isolator Location	Cable Type	Install Method
Power Distribution	Main LV Switchboard	Transformer	BS88 Fuse	RADIAL	E	Z	WM3	ACB		N/A	N/A
Power Distribution	MCB Board	Main Switchboard	MCCB	RADIAL	F	Z	WM3	Switch Disconnector	Integral within board	N/A	N/A
Mechanical Controls	Mechanical Control Panel	Main Swbd	MCCB	RADIAL	F	Z	WM3	IP65 Switch Disconnector	Surface mounted adjacent to and within 600mm of equipment cable entry point	A	FCP4
Lighting	Internal Lighting Accessible Ceilings	Ltg DB (via Pluggable LCM)	MCB(C)	LTG	B	Y	WM4	Pluggable LCM	Surface mounted in CV central to luminaire group (5m max flex length)	G	FCL6
Lighting	Internal Lighting Non-Accessible Ceilings	Ltg DB (via HW LCM)	MCB(C)	LTG	B	Y	WM4	N/A	N/A	G	FCL3
Lighting	Internal Lighting Surface Areas and Plant Rooms	Ltg DB	MCB(C)	LTG	A	Z	WM2	Pluggable Rose	Surface mounted adjacent to and within 600mm of cable entry position	G	FCL1
Lighting	Illuminated Signage	Power DB	MCB(C)	RADIAL	F	Z	WM4	IP65 Switch Disconnector	Surface mounted in CV adjacent to and within 600mm of cable entry position	A	FCL4
Lighting	External Lighting Building Mounted	Ext Ltg DB (via HW LCM)	MCB(C)	LTG	F	Y	WM4	CPD	DB	G	FCL4
Lighting	External Lighting Column Mounted	Ext Ltg DB (via HW LCM)	MCB(C)	LTG	F	Y	WM7	Fused Cut-Out	Mounted within base of lighting column	B	FCP1
Lighting Control	Area Controller	Ltg DB	MCB(C)	RADIAL	B	Y	WM4	13A Sw-Fused Connection Unit	Surface mounted in CV adjacent to and within 600mm of cable entry position	A	FCP4
Small Power	U/F Busbar	Power DB	MCB(C)	RADIAL	F	Y	WM4	Permanent Connection	N/A	N/A	N/A
Small Power	Cleaners Grommets	Power DB	RCBO(C)	RADIAL	F	Y	WM4	Permanent Connection	N/A	N/A	N/A
Small Power	Cleaners Sockets	Power DB	RCBO(C)	RADIAL	B	Y	WM4	Permanent Connection	N/A	B	FCP2
Small Power	General Sockets	Power DB	RCBO(C)	RADIAL	B	Y	WM4	Permanent Connection	N/A	B	FCP2
Fire Alarm	Fire Alarm Panel	Main Swbd	MCB(C)	RADIAL	J^{FR}	Y	WM4	13A UnSw-Fused Connection Unit	Flush mounted adjacent to and within 600mm of cable entry position	J^{FR}	FCP2
Fire Engineering	Smoke Damper	Power DB	MCB(C)	RADIAL	J^{FR}	Y	WM4	13A UnSw-Fused Connection Unit	Surface mounted in CV adjacent to and within 600mm of cable entry position	J^{FR}	FCP4
Security	Access Controller	Power DB	MCB(C)	RADIAL	B	Y	WM4	13A Sw-Fused Connection Unit	Surface mounted in CV on secure side adjacent to and within 600mm of cable entry position	A	FCP4
Security	CCTV Camera (Column Mounted)	Power DB	MCB(C)	RADIAL	F	Y	WM7	Fused Cut-Out	Mounted within base of CCTV column	B	FCP1
Security	CCTV Camera (Internal)	Power DB / Cat 6 IP	MCB(C)	RADIAL	B	Y	WM4	13A Sw-Fused Connection Unit	Surface mounted in CV adjacent to and within 300mm of cable entry position	A	FCP4
Security	CCTV DVR / NVR Recorder	Power DB	MCB(C)	RADIAL	B	Y	WM4	13A Sw-Fused Connection Unit	Flush mounted adjacent to and within 600mm of equipment cable entry, height TBA	G	
Security	CCTV Monitor	Power DB	MCB(C)	RING	B	Y	WM4	13A Sw-Fused Connection Unit	Flush mounted adjacent to and within 600mm of equipment cable entry, height TBA	G	
Security	Intercom System	Power DB	MCB(C)	RADIAL	B	Y	WM4	13A Sw-Fused Connection Unit	Surface mounted adjacent to and within 600mm of cable entry position	A	FCP4
Security	Intruder Alarm Panel	Power DB	MCB(C)	RADIAL	B	Y	WM4	13A Sw-Fused Connection Unit	Surface mounted adjacent to and within 600mm of cable entry position	A	FCP4
Security	Intruder Alarm Zone Expander	Power DB	MCB(C)	RADIAL	B	Y	WM4	13A Sw-Fused Connection Unit	Surface mounted adjacent to and within 600mm of cable entry position	A	FCP4
Disability Assistance	Disabled Refuge Panel	Power DB	MCB(C)	RADIAL	B	Y	WM4	13A Sw-Fused Connection Unit	Flush mounted adjacent to and within 600mm of cable entry position	A	FCP2

System Category	Equipment Description	Circuit Details						Final Connection			
		Supply Board	CPD Type	Circuit Type	Cable Type	CPC Type	Install Method	Local Isolator	Isolator Location	Cable Type	Install Method
Disability Assistance	Disabled WC Alarm Panel	Power DB	MCB(C)	RADIAL	B	Y	WM4	13A Sw-Fused Connection Unit	Flush mounted adjacent to and within 600mm of cable entry position	A	FCP2
Disability Assistance	Disabled WC Local Controller	Power DB	MCB(C)	RADIAL	B	Y	WM4	13A Sw-Fused Connection Unit	Surface mounted in CV adjacent to and within 600mm of cable entry position	A	FCP4
Disability Assistance	Induction Loop System	Power DB	MCB(C)	RING	B	Y	WM4	13A Sw-Fused Connection Unit	Surface mounted in CV adjacent to and within 600mm of cable entry position	A	FCP4
ICT	Data Network Cabinet	Power DB	MCB(C)	RADIAL	B	Y	WM4	16A 230V Plug and Socket	Surface mounted in FV adjacent to and within 600mm of cable entry position	A	FCP4
ICT	Wireless Network Point	Power DB	MCB(C)	RADIAL	B	Y	WM4	13A Sw-Socket Outlet	Surface mounted in CV adjacent to and within 600mm of cable entry position	G	FCP1
AV	IRS Amplifier / Booster	Power DB	MCB(C)	RADIAL	B	Y	WM4	13A Sw-Fused Connection Unit	Surface mounted adjacent to and within 600mm of cable entry position	A	FCP4
Lift Installation	Goods / Passenger / Platform Lift	Main Swbd	MCCB	RADIAL	F	Z	WM3	Switch Disconnector	TBA with lift specialist	A	FCP4
Other	Electric Charging Points (Dual Socket)	Power DB	MCB(C)	RADIAL	F	Z	WM3	IP65 Switch Disconnector	Flush mounted adjacent to and within 600mm of cable entry position	A	FCP4
Other	Door Hold Open	Power DB	MCB(C)	RADIAL	B	Y	WM4	13A Sw-Fused Connection Unit	Flush mounted 300mm BFCL adjacent to and within 600mm of cable entry position	A	FCP2
Other	Automatic Sliding Door	Power DB	MCB(C)	RADIAL	B	Y	WM4	13A Sw-Fused Connection Unit	Flush mounted 250mm BFCL adjacent to and within 600mm of cable entry position	A	FCP2
Other	Dish Washer	Power DB	RCBO(C)	RADIAL	B	Y	WM4	13A Sw-Socket Outlet + Ctrl Sw above WT	Flush mounted 450mm AFFL below worktop	G	
Other	Fridge Freezer	Power DB	MCB(C)	RADIAL	B	Y	WM4	13A Sw-Socket Outlet + Ctrl Sw above WT	Flush mounted 450mm AFFL below worktop	G	
Other	Hand Dryer	Power DB	MCB(C)	RADIAL	B	Y	WM4	13A Sw-Fused Connection Unit	Flush mounted 250mm BFCL directly above the hand dryer	A	FCP2
Other	Television	Power DB	MCB(C)	RING	B	Y	WM4	13A Sw-Socket Outlet	Flush mounted adjacent to and within 600mm of equipment cable entry, height TBA with architect	G	
Other	Water Cooler	Power DB	RCBO(C)	RING	B	Y	WM4	13A Sw-Socket Outlet	Flush mounted 450mm AFFL	G	
Domestic Services	Water Booster Set	Power DB	MCB(C)	RADIAL	F	Z	WM3	Switch Disconnector	Surface mounted adjacent to and within 600mm of cable entry position	A	FCP4
Domestic Services	Water Boiler	Power DB	MCB(C)	RADIAL	B	Y	WM4	13A Sw-Fused Connection Unit	Flush mounted 450mm AFFL below worktop and within 600mm of cable entry position	A	FCP2
Heating & Cooling	Outdoor Unit	Power DB	MCB(C)	RADIAL	F	Z	WM3	IP65 Switch Disconnector	Surface mounted adjacent to and within 600mm of equipment cable entry point	A	FCP4
Heating & Cooling	Air Conditioning Controller	Power DB	MCB(C)	RADIAL	B	Y	WM4	13A Sw-Fused Connection Unit	Flush mounted adjacent to and within 600mm of cable entry position	A	FCP2
Heating & Cooling	Branch Controller	Power DB	MCB(C)	RADIAL	B	Y	WM4	13A Sw-Fused Connection Unit	Surface mounted in CV adjacent to and within 600mm of cable entry position	A	FCP4
Heating & Cooling	Condensate Pump	Power DB	MCB(C)	RADIAL	B	Y	WM4	13A Sw-Fused Connection Unit	Surface mounted in CV adjacent to and within 600mm of cable entry position	A	FCP4
Heating & Cooling	Electric Panel Heater	Power DB	MCB(C)	RADIAL	B	Y	WM4	13A Sw-Fused Connection Unit	Flush mounted 450mm AFFL adjacent to and within 600mm of cable entry position	A	FCP2
Heating & Cooling	Indoor Unit	Power DB	MCB(C)	RADIAL	B	Y	WM4	13A Sw-Fused Connection Unit	Surface mounted in CV adjacent to and within 600mm of cable entry position	A	FCP4
Heating & Cooling	Over Door Heater	Power DB	MCB(C)	RADIAL	F	Z	WM3	Switch Disconnector	Surface mounted in CV adjacent to and within 600mm of cable entry position	A	FCP2
Heating & Cooling	Trace Heating	Power DB	MCB(C)	RADIAL	B	Y	WM4	13A Sw-Fused Connection Unit	Surface mounted adjacent to and within 600mm of cable entry position	A	FCP4
Heating & Cooling	Under Floor Heating	Power DB	MCB(C)	RADIAL	B	Y	WM4	13A Sw-Fused Connection Unit	Surface mounted adjacent to and within 600mm of cable entry position	A	FCP4

System Category	Equipment Description	Circuit Details						Final Connection			
		Supply Board	CPD Type	Circuit Type	Cable Type	CPC Type	Install Method	Local Isolator	Isolator Location	Cable Type	Install Method
Ventilation	Air Handling Unit	Main Swbd	MCB(C)	RADIAL	F	Z	WM3	IP65 Switch Disconnector	Surface mounted adjacent to and within 600mm of equipment cable entry point	A	FCP4
Ventilation	Heat Recovery Ventilation Unit	Power DB	MCB(C)	RADIAL	B	Y	WM4	13A Sw-Fused Connection Unit	Surface mounted adjacent to and within 600mm of equipment cable entry point	A	FCP4
Ventilation	Motorised Damper	Power DB	MCB(C)	RADIAL	B	Y	WM4	13A Sw-Fused Connection Unit	Surface mounted adjacent to and within 600mm of equipment cable entry point	A	FCP4
Ventilation	Supply / Extract Fan	Power DB	MCB(C)	RADIAL	B	Y	WM4	13A Sw-Fused Connection Unit	Surface mounted adjacent to and within 600mm of equipment cable entry point	A	FCP4

Description	Designation	Cable Type Ref	CPC Type Ref	Circuit Installation Method Ref
LV Meter Tails	Non Essential	E	Z	WM5
Sub-Main Distribution	Non Essential	F	Z / Y	WM3
Major Plant Supplies	Non Essential	F	Z / Y	WM3
Major Plant Supplies	Essential	K^{FR}	W^{FR}	WM3
C/V Busbar Supplies	Non Essential	F	Y	WM3
Final Circuits - Flush Areas	Non Essential	B	Y	WM4
Final Circuits - Flush Areas	Essential	J^{FR}	Y	WM4
Final Circuits - Surface Areas	Non Essential	A	Z	WM2
Final Circuits - Surface Areas	Essential	K^{FR}	W^{FR}	WM3
Final Circuits - External Lighting	Non Essential	F	Y	WM6
Fire Alarm Panel Supply	Non Essential	J^{FR}	Y	WM4

Approved Cable Types & Installation Methods
Phase Conductor Reference Key

Reference	Description	Manufacturer / Range or Equal and Approved	BS7671 Appendix 4 Table Reference
A	Single-core XLPE (OHLS) insulated cables with or without sheath	Draka / Wiring Cable	4E1A 4E1B
B	Multi-core OHLS insulated / OHLS sheathed flexible cable with full size insulated CPC	Draka / Wiring Cable	4D2A 4D2B
C	Multi-core XLPE insulated / OHLS sheathed flat wiring cable with bare CPC	Draka / Wiring Cable	4D5A
D	Single-core XLPE insulated / OHLS sheathed cables	Draka / Power Cable	4E1A 4E1B
E	Single-core XLPE insulated / SWA or AWA / OHLS (indoor use) or MDPE (outdoor use) sheathed cables	Draka / Power Cable	4E3A 4E3B
F	Multi-core XLPE insulated / SWA / OHLS (indoor use) or MDPE (outdoor use) sheathed cable	Draka / Power Cable	4E4A 4E4B
G	Multi-core PVC insulated / heat resistant or low temperature PVC sheathed flexible cable (final connections only)	Draka / Flexible Cable	4F3A 4F3B
H^{FR}	Multi-core silicone rubber insulated / aluminium polyester screened / OHLS sheathed fire rated cable (Standard Grade / 30-min)	Draka / Ft 30 (Standard)	
J^{FR}	Multi-core silicone rubber insulated / aluminium polyester screened / OHLS sheathed fire rated cable (Enhanced Grade / 120-min)	Draka / Ft 120 (Enhanced)	
K^{FR}	Multi-core mica-glass taped and XLPE insulated / OHLS bedded / SWA / OHLS sheathed fire rated cable (Enhanced Grade / 120-min)	Draka / Ftp 120 (Powerplus)	
L^{FR}	Multi-core mineral insulated / copper sheath / OHLS outer sheathed fire rated cable (Enhanced Grade / 120-min)	Tyco / Pyrotenax (MICC)	

Approved Cable Types & Installation Methods
CPC Conductor Reference Key

Reference	Description	Manufacturer / Range or Equal and Approved	BS7671 Appendix 4 Table Reference
V	Flat section tape with or without sheath	-	-
W^{FR}	Single-core mica-glass taped / OHLS sheathed fire rated cable (Green & Yellow)	Draka / Ft Sifer	-
X	Cable armour / sheath	-	-
Y	Integral core of a multi-core cable (Green & Yellow)	-	-
Z	Separate single-core OHLS insulated cable (Green & Yellow)	Draka / Wiring Cable	4E1A 4E1B

Approved Cable Types & Installation Methods
Installation Method Reference Key

Reference	Description
WM1	Clipped direct to the building structure
WM2	Installed in galvanised steel trunking and conduit
WM3	Installed on galvanised steel cable ladder / tray
WM4	Installed on steel wire cable basket
WM5	Installed within a cable trench (ducted across roads)
WM6	Buried direct (ducted under hard landscape, roads and footpaths)
WM7	Installed within a cable duct (continuously ducted)
WM8	Installed on rubber cable matting

Approved Cable Types & Installation Methods
Installation Method Reference Key

Reference	Description
FCP1	Clipped direct to the building structure
FCP2	Installed in galvanised steel conduit to an outlet box located behind the cable entry position
FCP3	Installed in galvanised steel conduit direct to the cable entry box
FCP4	Installed within PVC flexible steel conduit direct to the cable entry box
FCP5	Installed on galvanised steel cable ladder / tray to the cable entry box
FCL1	Installed within galvanised steel trunking and conduit to a pluggable rose connection mounted within 600mm of the luminaire
FCL2	Installed within galvanised steel conduit to a pluggable rose connection mounted directly behind the luminaire (only where accessible via cut-out)
FCL3	Installed within galvanised steel conduit to a conduit box and 2m flexible conduit spur to allow luminaire connections to be made below the ceiling
FCL4	Installed within galvanised steel conduit to a flush mounted conduit box mounted directly behind the luminaire
FCL5	Modular wiring system complete with a pluggable 'T' piece mounted on or located behind the luminaire
FCL6	Modular wiring system complete with pluggable LCM connections (1no luminaire / port unless shown or stated otherwise), LCM's to be mounted central to luminaire group

Appendix 4 – Proposed Luminaire Schedules

Morgan Sindall

Hammerstone Road, Manchester

Proposed Internal Luminaire Schedule

Last Updated 30/04/2021

Ref: HRD-HAN-ZZ-XX-SH-E-001

Revision C1

Hannan Associates
MEP Design Solutions

Internal Luminaire Schedule

A	34W – 4140lm 600x600mm Recessed 'Dali' Luminaire wireless control	Open Plan Offices
A1	34W – 3268lm 600x600mm Recessed 'Dali' Luminaire wireless control	Cellular Offices
B	16W - Recessed Downlight with ring attachment	Circulation
B1	16W - Recessed Downlight Mirage 3 C165	Circulation
C	29W 2745lm - Recessed Downlight with clear cover	Male/Female WCs / Change
C1	17W 1940lm- Recessed Downlight with clear IP54 cover	Male/Female WCs / Change / Dis WC
D	32W 4628lm - IP65 Corrosion resistant surface linear luminaire	Plant Rooms/BOH Corridors
EX	Emergency Exit bulkhead adhesive legend	Exit Doors
EX1	Emergency Exit bulkhead adhesive legend	Exit Doors
EX65	External Emergency Exit bulkhead	Exit Doors
FS	30W - Surface mounted linear batten with integral presence detector	Stores
G	16W - Recessed IP65 downlight	Male/Female Change
H	28W - 600x600m Recessed luminaire IP65 with NHEX diffuser	Laboratory/Trading Standards Workshop
J	32W - 600x600 luminaire with opal diffuser	Food Prep / Comms / Breakout
J1	26W - 600x600 luminaire with quadraprism lens	Library
K	30W 3736 3m length linear luminaire with opal diffuser 15W 1868 1.5m length linear luminaire with opal diffuser 9W 520mm 520mm length linear corner section with opal diffuser	Breakout areas
M	139w 24150lm Suspended LED high bay luminaire with medium distribution open area lens - Flight	Bin Store / Biffa Workshop / MCC Storage / Independent Users

Cascade Flex

Project reference:
A

Part number:
C6PRGY34K8XT



Product description:

Recessed modular luminaire with strong visual differentiation using a central linear optic. The light engine cartridge is easily replaced without tools for simple future upgrades and replacement ensuring a sustainable lighting solution - as Whitecroft Lighting CASCADE FLEX

Light source

Light source:
LED

Colour temperature:
4000K, Ra80

Colour render index:

Colour consistency:

Control gear:
DALI LED Driver

Integral control:
ORGANIC RESPONSE 3

Luminaire finish:
White

Luminaire performance

Lumens:
4140

Light output ratio:
100%

Circuit watts:
34.5

LL/CW:
120

Power factor:
>0.9

LED life performance:
L80B50 @ 50K hours

Emergency:
N/A

Emergency output:

Dimensions & Weight

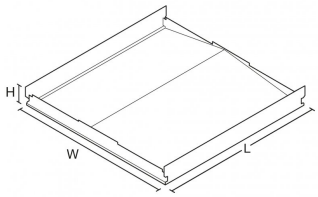

Polar Curve (Indicative Only)

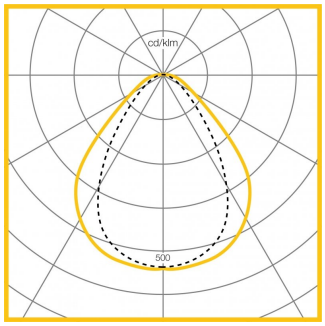

VERSION	L	W	H	KG	KG(EM)
Exposed Tee	584	584	69	4.0	5.5
Spring Tee	599	599	83	4.0	5.5
VERSION	L	W	H	KG	KG(EM)
SAS 330	1194	297	68	5.5	7.5

Cascade Flex

Project reference:
A1

Part number:
C6PRGY24K8XT



Product description:

Recessed modular luminaire with strong visual differentiation using a central linear optic. The light engine cartridge is easily replaced without tools for simple future upgrades and replacement ensuring a sustainable lighting solution - as Whitecroft Lighting CASCADE FLEX

Light source

Light source:
LED

Colour temperature:
4000K, Ra80

Colour render index:

Colour consistency:

Control gear:
DALI LED Driver

Integral control:
ORGANIC RESPONSE 3

Luminaire finish:
White

Luminaire performance

Lumens:
3268

Light output ratio:
100%

Circuit watts:
26.9

LL/CW:
121

Power factor:
>0.9

LED life performance:
L80B50 @ 50K hours

Emergency:
N/A

Emergency output:

Dimensions & Weight

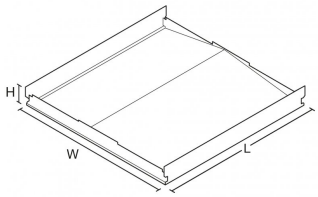

Polar Curve (Indicative Only)

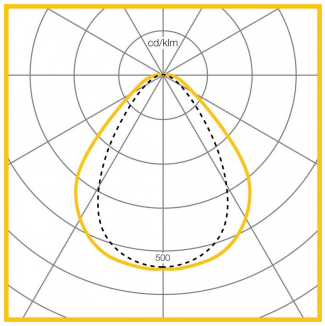

VERSION	L	W	H	KG	KG(EM)
Exposed Tee	584	584	69	4.0	5.5
Spring Tee	599	599	83	4.0	5.5
VERSION	L	W	H	KG	KG(EM)
SAS 330	1194	297	68	5.5	7.5

Mirage 3 C165

Project reference:
B

Part number:
M3MY34K8M1
MA3-FLO

Product description:

Recessed downlighter with a common appearance across the product family. Narrow 11mm width bezel and shallow depth body. Graphite heat sink for optimum thermal management and superior optics designed for maximum visual comfort. Simple spring ceiling retention method to suit ceiling thicknesses between 1-50mm. Supplied with connected remote driver. Large round version, 165mm diameter cut out, 173mm over bezel - as Whitecroft MIRAGE 3



Light source

Light source:
LED

Colour temperature:
4000K, Ra80

Colour render index:

Colour consistency:

Control gear:
DALI LED Driver

Integral control:

Luminaire finish:
SemiSpec Reflector,White Bezel

Luminaire performance

Lumens:
2010

Light output ratio:
100%

Circuit watts:
16.6

LL/CW:
121

Power factor:
>0.9

LED life performance:
L80B50 @ 50K hours

Emergency:
N/A

Emergency output:

Dimensions & Weight

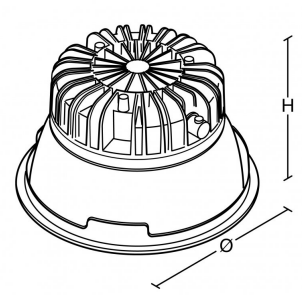

Polar Curve (Indicative Only)

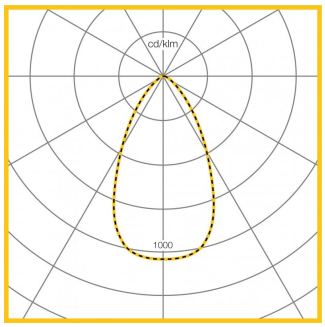

VERSION	Ø	H	KG	KG(EM)	CAØ Cut Aperture
C165	173	104	1.0	2.0	165

Mirage 3 C165

Project reference:
B1

Part number:
M3WH34K8M1



Product description:

Recessed downlighter with a common appearance across the product family. Narrow 11mm width bezel and shallow depth body. Graphite heat sink for optimum thermal management and superior optics designed for maximum visual comfort. Simple spring ceiling retention method to suit ceiling thicknesses between 1-50mm. Supplied with connected remote driver. Large round version, 165mm diameter cut out, 173mm over bezel - as Whitecroft MIRAGE 3

Light source

Light source:
LED

Colour temperature:
4000K, Ra80

Colour render index:

Colour consistency:

Control gear:
Fixed Output

Integral control:

Luminaire finish:
SemiSpec Reflector,White Bezel

Luminaire performance

Lumens:
1974

Light output ratio:
100%

Circuit watts:
16.6

LL/CW:
119

Power factor:
>0.9

LED life performance:
L80B50 @ 50K hours

Emergency:
N/A

Emergency output:

Dimensions & Weight

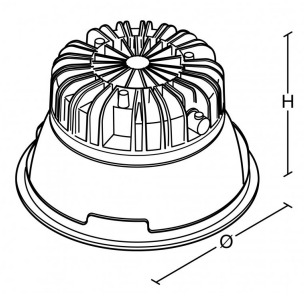

Polar Curve (Indicative Only)

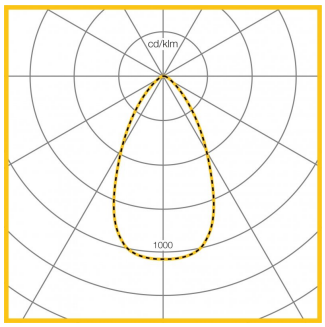

VERSION	Ø	H	KG	KG(EM)	CAØ Cut Aperture
C165	173	104	1.0	2.0	165

Esprit LED

Project reference:
C

Part number:
ESLH34K
ESLA-IP54C



Product description:

Recessed LED downlight with cast aluminium heatsink, white polycarbonate body and bezel, and integral 1100 / 2000 / 3000 lumen light engine and driver. 165mmØ cut aperture for ceiling thicknesses of 1-30mm. Rapid spring assembly installation – as Whitecroft Lighting ESPRIT LED

Light source

Light source:
LED

Colour temperature:
4000K

Colour render index:
>80

Colour consistency:
MacAdam 3 SDCM

Control gear:
Fixed Output

Integral control:

Luminaire finish:
White

Luminaire performance

Lumens:
2920

Light output ratio:
100.00%

Circuit watts:
29.00

LL/CW:
101

Power factor:
>0.9

LED life performance:
L80B50 @ 50K hours

Emergency:
N/A

Emergency output:

Dimensions & Weight

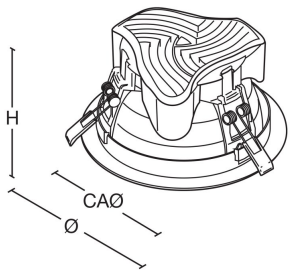

Polar Curve (Indicative Only)

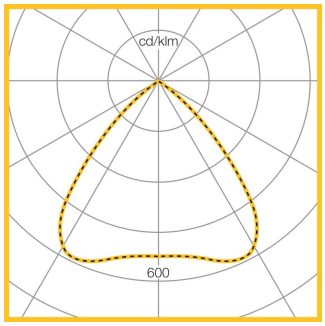

H	KG	KG(EM)	Ø	CAØ
99.1	1	2	192	165

Esprit LED

Project reference:
C1

Part number:
ESLH24K
ESLA-IP54C



Product description:

Recessed LED downlight with cast aluminium heatsink, white polycarbonate body and bezel, and integral 1100 / 2000 / 3000 lumen light engine and driver. 165mmØ cut aperture for ceiling thicknesses of 1-30mm. Rapid spring assembly installation – as Whitecroft Lighting ESPRIT LED

Light source

Light source:
LED

Colour temperature:
4000K

Colour render index:
>80

Colour consistency:
MacAdam 3 SDCM

Control gear:
Fixed Output

Integral control:

Luminaire finish:
White

Luminaire performance

Lumens:
1940

Light output ratio:
100.00%

Circuit watts:
17.30

LL/CW:
112

Power factor:
>0.9

LED life performance:
L80B50 @ 50K hours

Emergency:
N/A

Emergency output:

Dimensions & Weight

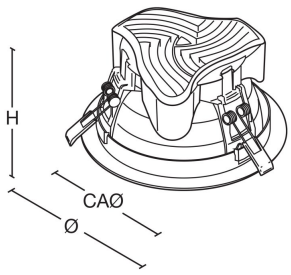

Polar Curve (Indicative Only)

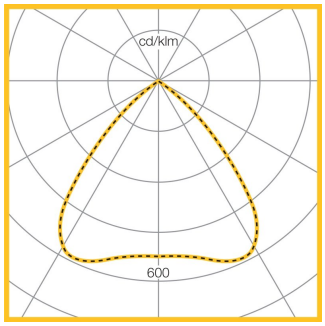

H	KG	KG(EM)	Ø	CAØ
99.1	1	2	192	165

Esprit LED

Project reference:
C2

Part number:
ESLH24K

Product description:
Recessed LED downlight with cast aluminium heatsink, white polycarbonate body and bezel, and integral 1100 / 2000 / 3000 lumen light engine and driver. 165mmØ cut aperture for ceiling thicknesses of 1-30mm. Rapid spring assembly installation – as Whitecroft Lighting ESPRIT LED



Light source

Light source:
LED

Colour temperature:
4000K

Colour render index:
>80

Colour consistency:
MacAdam 3 SDCM

Control gear:
Fixed Output

Integral control:

Luminaire finish:
White

Luminaire performance

Lumens:
1940

Light output ratio:
100.00%

Circuit watts:
17.30

LL/CW:
112

Power factor:
>0.9

LED life performance:
L80B50 @ 50K hours

Emergency:
N/A

Emergency output:

Dimensions & Weight

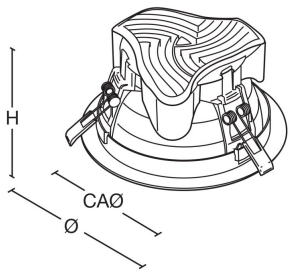

Polar Curve (Indicative Only)

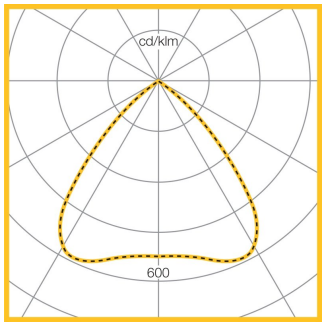

H	KG	KG(EM)	Ø	CAØ
99.1	1	2	192	165

ACL Industry

Project reference:
D

Part number:
ACH44K



Product description:

LED IP66 anti-corrosive luminaire with GRP body with high impact polycarbonate injection moulded opal diffuser. High quality seamless gasket for extreme durability. Suitable for mounting externally under canopies, not exposed or in direct sunlight – as Whitecroft Lighting ACL INDUSTRY

Light source

Light source:
LED

Colour temperature:
4000K

Colour render index:
>80

Colour consistency:
MacAdam 3 SDCM

Control gear:
Fixed Output

Integral control:

Luminaire finish:
Grey

Luminaire performance

Lumens:
4628

Light output ratio:
100.00%

Circuit watts:
32.10

LL/CW:
144

Power factor:
>0.9

LED life performance:
L80B50 @ 50K hours

Emergency:
N/A

Emergency output:

Dimensions & Weight

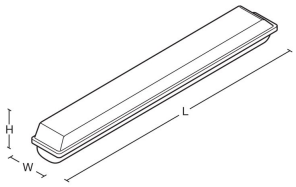

Polar Curve (Indicative Only)

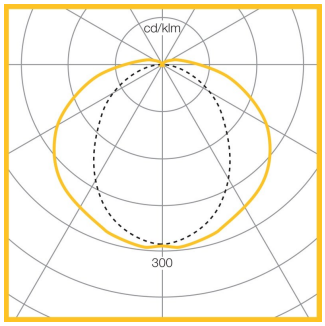

VERSION	L	W	H	KG	KG(EM)	Bracket Mount Centres	Cable Entry Points	Surface Mount Centres
1651, 3275 lumen	658	145	101	1.8	2.3	390	530	266
2800, 3900, 4600, 6400 lumen	1282	145	101	2.8	3.3	800	1050/1170	676
7500, 9500 lumen	1578	145	101	3.4	3.9	1100	1345/1170	976

Egress Exit

Project reference:
EX

Part number:
EESM30
EEM30R



Product description:
Self-contained LED maintained emergency sign luminaire with rigid body and an easy to install full set of legends. Ceiling mounted surface, suspended or recessed with LiFePO4 battery, energy efficient charger and LED charge indicator – as Whitecroft Lighting EGRESS EXIT.

Light source

Light source:
LED

Colour temperature:
4000K

Colour render index:

Colour consistency:

Control gear:
N/A

Integral control:

Luminaire finish:
N/A

Luminaire performance

Lumens:
None

Light output ratio:
None

Circuit watts:
None

LL/CW:
0

Power factor:
>0.9

LED life performance:
L80B50 @ 50K hours

Emergency:
3hr Maint

Emergency output:

Dimensions & Weight

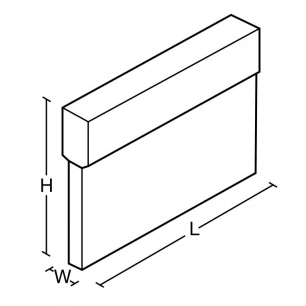

VERSION	L	W	H	KG(EM)	Cut Aperture
Exit Sign	330	45	250	2.5	
Recessing Frame	388	80	60	0.5	372x55

Concert EX65

Project reference:
EX1

Part number:
EX65M3
EX65LK/7010

Product description:
Surface IP65 Emergency LED bulkhead complete with polycarbonate TP(a) fresnal lens. 3hr maintained or non maintained - as Whitecroft Lighting CONCERT EX65.



Light source

Light source:
LED

Colour temperature:
4000K

Colour render index:

Colour consistency:

Control gear:
N/A

Integral control:

Luminaire finish:

Luminaire performance

Lumens:
None

Light output ratio:
None

Circuit watts:
9.60

LL/CW:
0

Power factor:
>0.9

LED life performance:
L80B50 @ 50K hours

Emergency:
3hr Maint

Emergency output:

L	W	H	KG(EM)
350	120	90	1.2

Concert EX65

Project reference:
EX65

Part number:
EX65M3

Product description:
Surface IP65 Emergency LED bulkhead complete with polycarbonate TP(a) fresnal lens. 3hr maintained or non maintained - as Whitecroft Lighting CONCERT EX65.



Light source

Light source:
LED

Colour temperature:
4000K

Colour render index:

Colour consistency:

Control gear:
N/A

Integral control:

Luminaire finish:

Luminaire performance

Lumens:
None

Light output ratio:
None

Circuit watts:
9.60

LL/CW:
0

Power factor:
>0.9

LED life performance:
L80B50 @ 50K hours

Emergency:
3hr Maint

Emergency output:

L	W	H	KG(EM)
350	120	90	1.2

Trimpak

Project reference:
FS

Part number:
TL12Q5H24K



Product description:

LED batten luminaire for surface, suspended or trunking mounting. Steel body and opal polycarbonate diffuser delivering between 2000 and 11000 lumens. Integral emergency and lighting controls options. Simple first fix mounting plate and a choice of cable entry points for flexibility and ease of installation – as Whitecroft Lighting TRIMPAK

Light source

Light source:
LED

Colour temperature:
4000K

Colour render index:
80

Colour consistency:
MacAdam 3 SDCM

Control gear:
Fixed Output

Integral control:
COM5 (NO SETBACK)

Luminaire finish:
White

Luminaire performance

Lumens:
4101

Light output ratio:
100.00%

Circuit watts:
30.00

LL/CW:
137

Power factor:
>0.9

LED life performance:
L80B50 @ 50K hours

Emergency:
N/A

Emergency output:

Dimensions & Weight

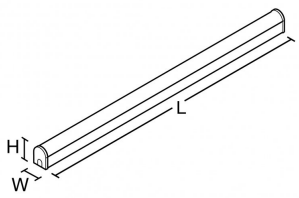

Polar Curve (Indicative Only)

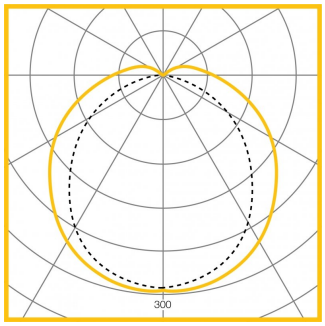

VERSION	L	W	H	KG	KG(EM)	FC
1200mm	1150	59	78	1.9	2.5	600
1500mm	1440	59	78	2.3	2.9	600
1800mm	1719	59	78	2.7	3.3	1200
VERSION	L	W	H	KG	KG(EM)	FC
1200mm with sensor	1302	59	78	2.3	2.7	600
1500mm with sensor	1582	59	78	2.7	3.1	600
1800mm with sensor	1861	59	78	3.1	3.5	1200

Mirage 3 C165 IP65

Project reference:
G

Part number:
M6WH34K8M1

Product description:

Recessed downlighter with a common appearance across the product family. Narrow 11mm width bezel and shallow depth body. Graphite heat sink for optimum thermal management and superior optics designed for maximum visual comfort. Simple spring ceiling retention method to suit ceiling thicknesses between 1-50mm. Supplied with connected remote driver. Large round, 165mm diameter cut out, 173mm over bezel. IP65 rated from below - as Whitecroft MIRAGE 3 C165 IP65



Light source

Light source:
LED

Colour temperature:
4000K, Ra80

Colour render index:

Colour consistency:

Control gear:
Fixed Output

Integral control:

Luminaire finish:
SemiSpec Reflector,White Bezel

Luminaire performance

Lumens:
1816

Light output ratio:
100%

Circuit watts:
16.6

LL/CW:
109

Power factor:
>0.9

LED life performance:
L80B50 @ 50K hours

Emergency:
N/A

Emergency output:

Dimensions & Weight

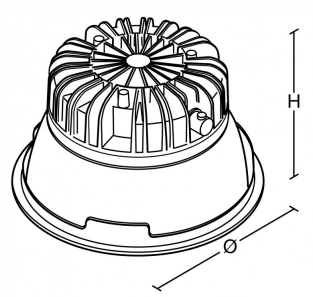

Polar Curve (Indicative Only)

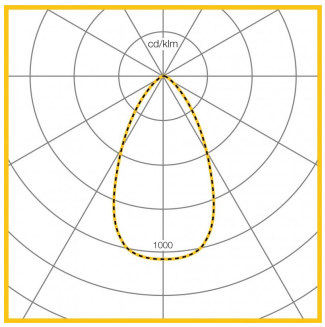

VERSION	Ø	H	KG	KG(EM)	CAØ Cut Aperture
C165 IP65	173	104	1.0	2.0	165

Lister

Project reference:
H

Part number:
L3LKH14K

Product description:

Recessed LED clean room luminaire to a BSI tested and certified construction as IP65 to the front, IP20 to the rear. Extruded aluminium frame with concealed front fixings and a choice of TP(a) rated optics - wipe clean Nhex-prism diffuser for all round glare control or an opal diffuser for general use areas - as Whitecroft Lighting LISTER.



Light source

Light source:
LED

Colour temperature:
4000K

Colour render index:
>80

Colour consistency:
MacAdam 3 SDCM

Control gear:
Fixed Output

Integral control:

Luminaire finish:
White

Luminaire performance

Lumens:
3300

Light output ratio:
100.00%

Circuit watts:
28.00

LL/CW:
118

Power factor:
>0.9

LED life performance:
L80B50 @ 50K hours

Emergency:
N/A

Emergency output:

Dimensions & Weight

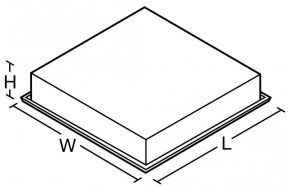

Polar Curve (Indicative Only)

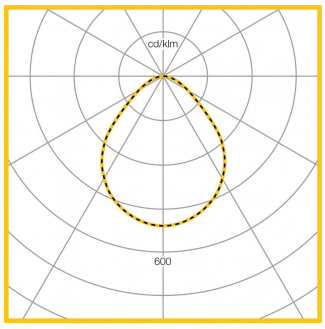

Size	L	W	H	KG	KG(EM)	Cut Aperture
600 x 600	598	598	109	9	9.5	563 x 563 +/-3
Size	L	W	H	KG	KG(EM)	Cut Aperture
600 x 1200	1198	598	108	12	13.5	563 x 1163 +/-3
Size	L	W	H	KG	KG(EM)	Cut Aperture
300 x 1200	1197.7	297.7	108.3	6	6.5	263 x 1163 +/-3

Tegan 2

Project reference:
J

Part number:
TSDBH34K

Product description:
600mm x 600mm recessed LED luminaire with slimline steel body and Quadraprism optic for LG7 compliant schemes or opal diffuser for general area lighting. Suitable for lay in Exposed Tee ceilings – as Whitecroft Lighting TEGAN 2

Light source

Light source:
LED

Colour temperature:
4000K

Colour render index:
80

Colour consistency:
MacAdam 3 SDCM

Control gear:
Fixed Output

Integral control:
N/A

Luminaire finish:
White

Luminaire performance

Lumens:
4126

Light output ratio:
100%

Circuit watts:
32

LL/CW:
129

Power factor:
>0.9

LED life performance:
L80B50 @ 50K hours

Emergency:
N/A

Emergency output:

Dimensions & Weight

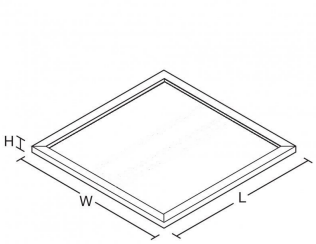

Polar Curve (Indicative Only)

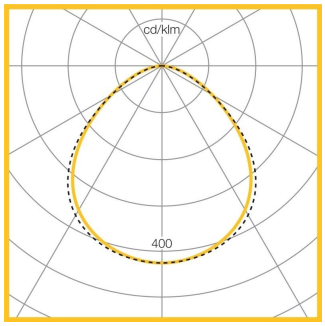

VERSION	L	W	H	KG
Standard	595	595	24	5.4

VERSION	L	W	H1	H2	KG(EM)
Emergency	595	595	24	61	7.0

Tegan 2

Project reference:
J1

Part number:
TSPAH24K

Product description:
600mm x 600mm recessed LED luminaire with slimline steel body and Quadraprism optic for LG7 compliant schemes or opal diffuser for general area lighting. Suitable for lay in Exposed Tee ceilings – as Whitecroft Lighting TEGAN 2

Light source

Light source:
LED

Colour temperature:
4000K

Colour render index:
80

Colour consistency:
MacAdam 3 SDCM

Control gear:
Fixed Output

Integral control:
N/A

Luminaire finish:
White

Luminaire performance

Lumens:
3294

Light output ratio:
100%

Circuit watts:
31

LL/CW:
106

Power factor:
>0.9

LED life performance:
L80B50 @ 50K hours

Emergency:
N/A

Emergency output:

Dimensions & Weight

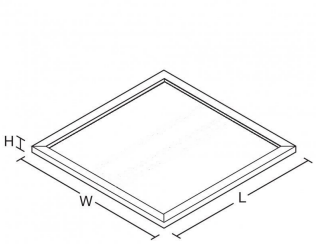

Polar Curve (Indicative Only)

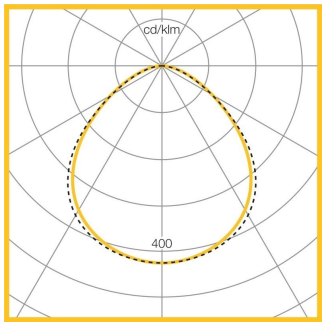

VERSION	L	W	H	KG
Standard	595	595	24	5.4

VERSION	L	W	H1	H2	KG(EM)
Emergency	595	595	24	61	7.0

Avenue Metro Recessed

Project reference:
K (3M & 1.5M)

Part number:
AOARY314KW
AOARYB14KW

Product description:
Modular linear LED system with a modern minimalist aesthetic for continuous or stand alone applications. TP(a) Opal diffuser for general, circulation and feature areas. TP(a) Prismatic diffuser or Pod optic for EN12464-1 compliant schemes. Create long lines and features of light with a seamless aesthetic – as Whitecroft Lighting AVENUE METRO RECESSED.



Light source

Light source:
LED

Colour temperature:
4000K

Colour render index:
>80

Colour consistency:
MacAdam 3 SDCM

Control gear:
DALI LED Driver

Integral control:

Luminaire finish:
White

Luminaire performance

Lumens:
3736

Light output ratio:
100.00%

Circuit watts:
30.00

LL/CW:
125

Power factor:
>0.9

LED life performance:
L80B50 @ 50K hours

Emergency:
N/A

Emergency output:

Dimensions & Weight

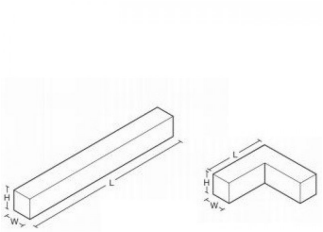

Polar Curve (Indicative Only)

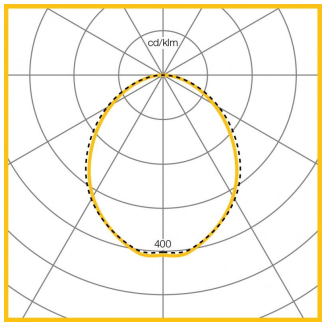

VERSION	L	W†	H	KG	KG(EM)
1m	1000	95	83	3.5	4.0
1.25m	1250	95	83	4.5	5.0
1.5m	1500	95	83	5.0	5.5
2m	2000	95	83	7.0	7.5
3m	3000	95	83	10.0	10.5
Corner	520	95	83	3.5	4.0
End Cap	15†	95	83	0.1	-

Flight

Project reference:
M

Part number:
FGMH34K



Product description:

Surface or suspended LED highbay luminaire with extruded aluminium LED housing and clear polycarbonate lens optics. Supplied with first fix bracket and plug connector for easy installation. The LED module is easily replaced for simple future upgrades and replacement ensuring a sustainable lighting solution - as Whitecroft Lighting FLIGHT

Light source

Light source:
LED

Colour temperature:
4000K

Colour render index:

Colour consistency:

Control gear:
Fixed Output

Integral control:
N/A

Luminaire finish:
White

Luminaire performance

Lumens:
24150

Light output ratio:
100%

Circuit watts:
139.9

LL/CW:
173

Power factor:
>0.9

LED life performance:
L80B50 @ 50K hours

Emergency:
N/A

Emergency output:

Dimensions & Weight

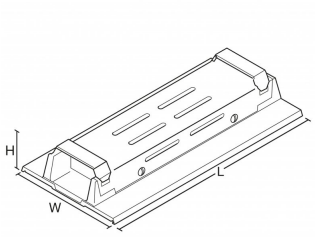

Polar Curve (Indicative Only)

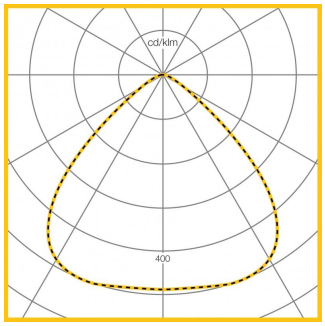

FLIGHT IP20 VERSIONS	L	W	H	KG	KG(EM)
12,000 18,000 and 24,000 lumens	585	285	75	4.9	5.3
30,000 and 36,000 lumens	875	285	75	6.9	7.3
42,000	1165	285	75	8.3	8.7
FLIGHT IP65 VERSIONS	**L**	**W**	**H**	**KG**	**KG(EM)**
24,000 lumens	585	285	75	4.9	5.3
36,000lumens	875	285	75	6.9	7.3

Command Evo Switching

Project reference:
P1

Part number:
EVH

Product description:
Recessed or surface mounted switching programmable PIR presence/ absence detector – as Whitecroft Lighting COMMAND EVO SWITCHING



Light source

Light source:

Colour temperature:

Colour render index:

Colour consistency:

Control gear:
N/A

Integral control:

Luminaire finish:
White

Luminaire performance

Lumens:
None

Light output ratio:
None

Circuit watts:
None

LL/CW:
0

Power factor:
>0.9

LED life performance:
L80B50 @ 50K hours

Emergency:

Emergency output:

Dimensions & Weight

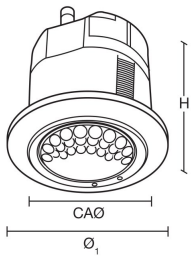

VERSION	H	KG	Ø1	Ø2	CAØ
Recessed	92.6	0.14	87		73
Surface	107.6	0.16	87	93	

Command COMRE

Project reference:
MW

Part number:
COMRE



Product description:

COMRE - Directional microwave presence detector. 20x20m room or 20m corridor range. 10sec - 15min time-out. Excessive daylight contribution hold-off. 3.5m maximum mounting height. Local adjustment of parameters by handheld programmer COMAHP (supplied separately). Local over-ride by IR remote control. Requires on-site commissioning.

Light source

Light source:

Colour temperature:

Colour render index:

Colour consistency:

Control gear:

Integral control:

Luminaire finish:

Luminaire performance

Lumens:
None

Light output ratio:
None

Circuit watts:
None

LL/CW:
0

Power factor:
>0.9

LED life performance:
L80B50 @ 50K hours

Emergency:

Emergency output:

Dimensions & Weight

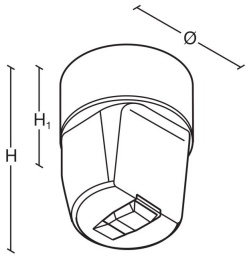

VERSION	H	H1	Ø	CAØ
Surface	60	35	74	76
THETA	60	35	74	89*

Command Titan Connection Hub

Project reference:
LCM

Part number:
TANBOXA

Product description:
Lighting Connection System for controlling switching and DALI dimming luminairies – as Whitecroft Lighting TITAN CONNECTION HUB.



Light source

Light source:

Colour temperature:

Colour render index:

Colour consistency:

Control gear:
N/A

Integral control:

Luminaire finish:
See Description

Luminaire performance

Lumens:
None

Light output ratio:
None

Circuit watts:
None

LL/CW:
0

Power factor:
>0.9

LED life performance:
L80B50 @ 50K hours

Emergency:
N/A

Emergency output:

Dimensions & Weight

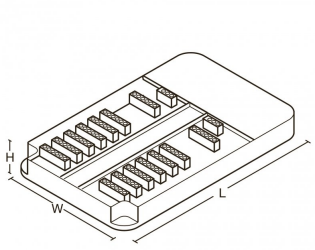

VERSION	L	W	H	KG
Connection Hub	320	200	45	1.8

Organic Response® Remote Sensor Node (SN3)

Project reference:
ORSN

Part number:
ORGRSN3R3M



Product description:

Wireless Proximity Limited Communication lighting control system with dual layer communication architecture. Integrated or remotely housed sensor nodes detect motion and ambient daylight levels and transmit and receive infrared messages wirelessly for intelligent decisions about light levels required. Can be customised to provide an interface with building management systems and vital building management information via a web based portal - as Whitecroft Lighting ORGANIC RESPONSE®.

Light source

Light source:

Colour temperature:

Colour render index:

Colour consistency:

Control gear:
N/A

Integral control:

Luminaire finish:
White

Luminaire performance

Lumens:
None

Light output ratio:
None

Circuit watts:
None

LL/CW:
0

Power factor:
>0.9

LED life performance:
L80B50 @ 50K hours

Emergency:
N/A

Emergency output:

Dimensions & Weight

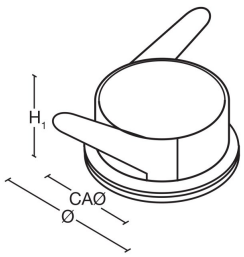

VERSION	H	Ø	CAØ
SN3 Remote Sensor (Rec)	39.4mm	74.8mm	63.5mm
SN3 Remote Sensor (Sur)	39.4mm	74.8mm	-
SN3 Remote Sensor (Sus)	44.6mm	74.8mm	-

Organic Response® System Overview

Project reference:
ORWS

Part number:
ORGWP



Product description:

Wireless Proximity Limited Communication lighting control system. Integrated or remotely housed sensor nodes detect motion and ambient daylight levels and transmit and receive infrared messages wirelessly for intelligent decisions about light levels required. Can be customised to provide an interface with building management systems and vital building management information via a web based portal – as Whitecroft Lighting ORGANIC RESPONSE®.

Light source

Light source:

Colour temperature:

Colour render index:

Colour consistency:

Control gear:

Integral control:

Luminaire finish:
White

Luminaire performance

Lumens:
None

Light output ratio:
None

Circuit watts:
None

LL/CW:
0

Power factor:
>0.9

LED life performance:
L80B50 @ 50K hours

Emergency:
N/A

Emergency output:

Morgan Sindall

Hammerstone Road, Manchester

Proposed External Luminaire Schedule

Last Updated 30/04/2021

Ref: HRD-HAN-ZZ-XX-SH-E-002

Revision C1

Hannan Associates
MEP Design Solutions

External Luminaire Schedule

X1	Levanter - LED post top luminaire (6m column)	External car park area
X2	Sirocco Park - LED twin head luminaire (10m column) IP66	External car park area

Luminaire Specification Sheet

Reference ‘X1’



Manuf. / Supplier	-	Whitecroft Lighting
Range	-	Levanter
Description	-	LED Post top luminaire (6m column) IP66
Control Gear	-	Electronic Driver
Light Source	-	LED
Lamp Package	-	TBC
Application	-	External Car Park Areas

Luminaire Specification Sheet

Reference ‘X2’



Manuf. / Supplier	-	Whitecroft Lighting
Range	-	Sirocco Park
Description	-	LED twin head luminaire (10m column) IP66
Control Gear	-	Electronic Driver
Light Source	-	LED
Lamp Package	-	TBC
Application	-	External Car Park Areas

Appendix 5 - ICT Responsibilities Interface Matrix

ICT INTERFACE MATRIX

MORGAN SINDALL

Last Updated By: Morgan Sindall Update Date: 07/01/2019

Project: Hammerstone Road Depot

Reference:

Element	Item	Design/ Specify	Procure	Install	Maintain	Budget	Notes
External Network							
	WAN Access	Client	Client	Client	Client	Client	
	Telephone Line(s)	Client	Client	Client	Client	Client	
	Red Care Line(s) or Equal to DP	Client	Client	Client	Client	Client	
	Red Care Line(s) or Equal From DP	MS	MS	MS	Client	MS	
	Ducting & Containment	MS	MS	MS	Client	MS	
Back Up Supplies							
	Rack Mounted UPS	Client	Client	Client	Client	Client	
	DRUPS UPS	MS	MS	MS	Client	MS	
LAN Passive							
	240v Power	MS	MS	MS	Client	MS	
	PDUs	MS	MS	MS	Client	MS	
	Underground Ducting	MS	MS	MS	Client	MS	
	Containment	MS	MS	MS	Client	MS	
	Cat 6 Cabling	MS	MS	MS	Client	MS	
	Fibre Backbone Cabling	MS	MS	MS	Client	MS	
	RJ45 Outlets	MS	MS	MS	Client	MS	
	Patch Panels	MS	MS	MS	Client	MS	
	Builders Work	MS	MS	MS	Client	MS	
	Server Room Data Cabinets / Racks	Client	MS	MS	Client	MS	Spec to be advised By MCC IT)
	Hub Room Data Cabinets / Racks	Client	MS	MS	Client	MS	Spec to be advised By MCC IT)
	Fibre to Desks	Client	Client	Client	Client	Client	
	Commissioning	N/A	MS	MS	Client	MS	
LAN Active							
	Patch Leads - CAT6	Client	Client	Client	Client	Client	
	CAT6 to Desks	Client	Client	Client	Client	Client	
	Patch Leads - Fibre	Client	Client	Client	Client	Client	
	Network Switches	Client	Client	Client	Client	Client	
	Routers	Client	Client	Client	Client	Client	
	Servers	Client	Client	Client	Client	Client	
	Commissioning	Client	Client	Client	Client	Client	
Wireless Network							
	Access Points (POE)	MS	MS	MS	Client	MS	Client to support MS with mapping to determine access point locations
	Authentication Software	Client	Client	Client	Client	Client	
	Authentication Server	Client	Client	Client	Client	Client	
	Wireless Cards	Client	Client	Client	Client	Client	
	Commissioning	N/A	Client	Client	Client	Client	
Telephony							
	Call Management Software	Client	Client	Client	Client	Client	
	Call Management Server	Client	Client	Client	Client	Client	
	Handsets	Client	Client	Client	Client	Client	
	Mobile Handsets	Client	Client	Client	Client	Client	
	Messaging	Client	Client	Client	Client	Client	
	Headsets	Client	Client	Client	Client	Client	
	Configuration	Client	Client	Client	Client	Client	
	Analogue Lines	MS	MS	MS	Client	MS	
	Commissioning	N/A	Client	Client	Client	Client	
Audio Visual							
(Requirements to be agreed)	Digital Displays	Client	Client	Client	Client	Client	Including all wall brackets, fixings and the like
	Projectors	Client	Client	Client	Client	Client	Including all wall brackets, fixings and the like
	Televisions	Client	Client	Client	Client	Client	Including all wall brackets, fixings and the like
	240v Power to Digital Displays	MS	MS	MS	Client	MS	
	240v Power to Projectors	MS	MS	MS	Client	MS	
	240v Power to Televisions	MS	MS	MS	Client	MS	
	Speakers	Client	Client	Client	Client	Client	Including all wall brackets, fixings and the like.
	Speaker Wiring	Client	Client	Client	Client	Client	Including all wall brackets, fixings and the like
	Microphones	Client	Client	Client	Client	Client	Including all wall brackets, fixings and the like
	Audio & Visual Containment	MS	MS	MS	Client	MS	Including back boxes
	Audio & Visual Infrastructure Cabling	Client	Client	Client	Client	Client	This includes cabling within containment
	Audio & Visual Face Plates	Client	Client	Client	Client	Client	Connection plates, brushed letterboxes etc.
	Portable hearing loop	Client	Client	Client	Client	Client	
	Commissioning	N/A	Client	Client	Client	Client	
	Corporate Room Booking System	MS	MS	MS	Client	MS	MS to co-ordinate with Client to ensure system functionality in line with client requirements.

ICT INTERFACE MATRIX

MORGAN SINDALL

Last Updated By: Morgan Sindall Update Date: 07/01/2019

Project: Hammerstone Road Depot

Reference:

Element	Item	Design/ Specify	Procure	Install	Maintain	Budget	Notes
Fire Alarm System							
	Hardware	MS	MS	MS	Client	MS	
	Software	MS	MS	MS	Client	MS	
	Cabling	MS	MS	MS	Client	MS	
	Power	MS	MS	MS	Client	MS	
	Network Connectivity	MS	MS	MS	Client	MS	
	Commissioning	MS	MS	MS	Client	MS	
Intruder Alarm System							
	Hardware	MS	MS	MS	Client	MS	
	Software	MS	MS	MS	Client	MS	
	Cabling	MS	MS	MS	Client	MS	
	Power	MS	MS	MS	Client	MS	
	Network Connectivity	MS	MS	MS	Client	MS	
	Commissioning	MS	MS	MS	Client	MS	
IP CCTV							
	Underground Ducting	MS	MS	MS	Client	MS	
	Cameras (Internal, External & ANPR)	MS	MS	MS	Client	MS	
	Audio Hardware	MS	MS	MS	Client	MS	
	Camera Brackets	MS	MS	MS	Client	MS	
	Specialist Cabling (e.g. external)	MS	MS	MS	Client	MS	
	Software	MS	MS	MS	Client	MS	
	Recording Hardware	MS	MS	MS	Client	MS	
	Software	MS	MS	MS	Client	MS	
	Recording Hardware	MS	MS	MS	Client	MS	
	Configuration	MS	MS	MS	Client	MS	
	Network Connectivity	MS	MS	MS	Client	MS	
	Commissioning	MS	MS	MS	Client	MS	
Access Control							
	Door Locks	MS	MS	MS	Client	MS	
	Personal Authentication Devices	Client	Client	Client	Client	Client	
	Readers	MS	MS	MS	Client	MS	
	Access Barriers	MS	MS	MS	Client	MS	
	Specialist Cabling (e.g. local connections)	MS	MS	MS	Client	MS	
	Software	Client	Client	Client	Client	Client	
	Servers	Client	Client	Client	Client	Client	
	Configuration	Client	Client	Client	Client	Client	
	Network Connectivity	MS	Client	MS	Client	Client	
	Commissioning	MS	MS	MS	Client	MS	
BMS							
	BMS Hardware	MS	MS	MS	Client	MS	Local interface controls with the outstations
	BMS Software	MS	MS	MS	Client	MS	
	Specialist Cabling (e.g. local connections)	MS	MS	MS	Client	MS	
	Servers	MS	Client	Client	Client	Client	
	Configuration	MS	MS	MS	Client	MS	
	Network Connectivity	MS	Client	MS	Client	Client	
	Commissioning	MS	MS	MS	Client	MS	
IP Television							
(Requirements to be agreed)	Aerials & Satelite Dishes	MS	MS	MS	Client	MS	
	Cabling to Server Room	MS	MS	MS	Client	MS	
	Signal Boosters	MS	MS	MS	Client	MS	
	Software	MS	MS	MS	Client	MS	
	Servers	MS	MS	MS	Client	MS	
	Configuration	MS	MS	MS	Client	MS	
	Network Connectivity	MS	MS	MS	Client	MS	
	Commissioning	MS	MS	MS	Client	MS	
User Equipment							
	Desktop PCs	Client	Client	Client	Client	Client	
	Laptops	Client	Client	Client	Client	Client	
	Printers	Client	Client	Client	Client	Client	
	Scanners	Client	Client	Client	Client	Client	
	Photocopiers	Client	Client	Client	Client	Client	
	Management Application Software	Client	Client	Client	Client	Client	
	Specialist Application Software	Client	Client	Client	Client	Client	
	Software Licensing	Client	Client	Client	Client	Client	
	Consumables	Client	Client	Client	Client	Client	
PV Installation / Electric Vehicle Charging	Hardware	MS	MS	MS	Client	MS	
	Software	MS	MS	MS	Client	MS	
	Specialist Cabling (e.g. local connections)	MS	MS	MS	Client	MS	
	Network Connectivity	MS	MS	MS	Client	MS	
	Commissioning	MS	MS	MS	Client	MS	

ICT INTERFACE MATRIX

MORGAN SINDALL

Last Updated By: Morgan Sindall Update Date: 07/01/2019

Project: Hammerstone Road Depot

Reference:

Element	Item	Design/ Specify	Procure	Install	Maintain	Budget	Notes

Appendix 6 - Lighting Control Methodology & Equipment Schedules

MCC Offices - Lighting Control Methods								
Area, Task or Activity Type	Manual Switching	Occupancy Detection	Absence Detection	Daylight Linking	Manual Dimming	Scene Control	Route Linking	Manual Override
Open Plan Office		Yes		Yes				Yes
Cellular Offices / Meeting Rooms			Yes					Yes
10 person Meeting Room			Yes		Yes			Yes
Laboratory	Yes							
Liquids Room	Yes							
Weights Room	Yes							
Trading Standards Workshop	Yes							
Stores		Yes						
Male / Female WCs		Yes						
Male / Female Changing		Yes						
Welfare Room		Yes						
FM Ops Room			Yes					Yes
Breakout		Yes						
Multi-Faith Room		Yes						
Food Prep		Yes						
Comms Room	Yes							
Plant Room	Yes							
BOH Corridors		Yes					Yes	
Library		Yes		Yes				Yes
Pace Rooms		Yes						
Drying Room		Yes						
Circulation							Yes	
Disabled WC		Yes						
Cleaners		Yes						
Decon		Yes						
Substation	Yes							
Condenser Store	Yes							

MCC Storage - Lighting Control Methods								
Area, Task or Activity Type	Manual Switching	Occupancy Detection	Absence Detection	Daylight Linking	Manual Dimming	Scene Control	Route Linking	Manual Override
Elections Storage	Yes							
FM Storage	Yes							
Pest Control Storage	Yes							
Trading Standards Storage	Yes							

Biffa Offices - Lighting Control Methods								
Area, Task or Activity Type	Manual Switching	Occupancy Detection	Absence Detection	Daylight Linking	Manual Dimming	Scene Control	Route Linking	Manual Override
Open Plan Office		Yes		Yes				Yes
Cellular Offices / Meeting Rooms			Yes					Yes
Office Supplies		Yes						
Reception		Yes						
Cleaners / Store		Yes						
PPE Store & Collection		Yes						
Male / Female WCs		Yes						
Male / Female Change / Shower		Yes						
Drying Room		Yes						
Confidential Filing		Yes						
Breakroom		Yes						
Food Prep		Yes						
Comms Room	Yes							

Biffa Workshop - Lighting Control Methods								
Area, Task or Activity Type	Manual Switching	Occupancy Detection	Absence Detection	Daylight Linking	Manual Dimming	Scene Control	Route Linking	Manual Override
Workshop	Yes							

Sublet - Lighting Control Methods								
Area, Task or Activity Type	Manual Switching	Occupancy Detection	Absence Detection	Daylight Linking	Manual Dimming	Scene Control	Route Linking	Manual Override
Open Plan Shell	Yes							

Bin Store / Biffa Temporary Workshop - Lighting Control Methods								
Area, Task or Activity Type	Manual Switching	Occupancy Detection	Absence Detection	Daylight Linking	Manual Dimming	Scene Control	Route Linking	Manual Override
Bin Store / Biffa Temporary Workshop	Yes							

Gatehouse- Lighting Control Methods								
Area, Task or Activity Type	Manual Switching	Occupancy Detection	Absence Detection	Daylight Linking	Manual Dimming	Scene Control	Route Linking	Manual Override
Office			Yes	Yes				Yes
Kitchen	Yes							
WCs		Yes						

Gritter Store - Lighting Control Methods								
Area, Task or Activity Type	Manual Switching	Occupancy Detection	Absence Detection	Daylight Linking	Manual Dimming	Scene Control	Route Linking	Manual Override
Office			Yes					Yes
Welfare	Yes							
WCs		Yes						
Garage		Yes						
Circulation		Yes						

SPF.4D DUAL-BUS SWITCH INTERFACE



- Makes standard switches intelligent and addressable.
- Compact design that can be accomodated within a 45mm deep blackbox.
- Interfaces to four retractive or conventional two position switches.
- Scene or Zonal control modes.
- Individually programmable switches and fade rates.
- Simple twisted pair cable connection to DALI or E-Bus.
- Flexible configuration via SPECS Manager graphical software.

The SPF.4D allows retractive or conventional two position switches to be connected to the SPECS lighting control system in an intelligent fashion.

The SPF.4D can connect to either an LCM's DALI line or the LCM's E-Bus from which both power and communication are achieved. (DALI line connetion is only compatible with SPH.27, SPH.27-R, SPV.56, SPV.57 type LCMs.) Flying leads are provided for direct wiring to the switches.

Each switch fitted to the SPF.4D may be individually configured to select or syscle between lighting scenes with adjustable fade rates; different buttons can also be used to control different zones, again with scene selection.

This interface is available in 1,2,3 and 4 switch versions; several SPF.4Ds can be combined when more than 4 buttons are required at a given position. This allows even the largest switch plate to have only one twisted pair cable connection via DALI or E-Bus to the lighting control system.

Operating Modes

SPECS Manager software can uniquely address each SPF.4D. The system can check that the SPF.4D has identified itself on the system and can program it to operate in different modes in the same fashion as the SPECS SPK.8 Intelligent Switch Plate.

Scene Mode

Scene mode can only be used with retractive switches; it is used to control one group of lighting to different scenes. Each of up to four buttons can be configured to select a scene or cycle between scenes in a predefined pattern.

Zonal Mode

Zonal mode can be used with retractive or conventional two position switches, it is used to control one group, or 'zone', of lighting from each switch. A short (retractive) or switch close (two position) can select any scene for the zone, it can also be configured to cycle or toggle on/off thereby achieveing two way and intermediate switching using normal switches and only two wires. A long press or switch open is also programmable, typically it would turn lighting off.

CONTACT US
T | 01992 450126
E | SALES@SIMMTRONIC.COM
E | AFTERSALES@SIMMTRONIC.COM
W| WWW.SIMMTRONIC.COM

HQ | LONDON & SOUTH
WATERSIDE
CHARLTON MEAD LANE
HODDESDON, HERTFORDSHIRE
EN11 0QR

MIDLANDS & NORTH
BLOC
17 MARBLE STREET
MANCHESTER
M2 3AW

Installation Procedure

SPF.4D Labelling

Each SPF.4D is identified by a three digit unique number, this number should be used to ensure that each SPF.4D is fitted in the correct location as given on drawings.

This indicates that this SPF.4D can be used to interface up to four switches and should have five flying leads, one for each switch and one common.

This is the terminal block for the DALI or E-Bus connection. (Note that it is polarity sensitive, this still applies when connected to a DALI bus).



Connecting to the switches

It is important to connect the wires according to the number of switches fitted as indicated in diagrams below. Loop connect the black flying lead to one side of each switch as a common; if using only one switch terminate both black common wire ends in the same terminal. If SPD.4-D variant has more wires than is required for number of switch connections, then the remaining wires must be cut off close to case or individually insulated, ensure no electrical contact is possible. Insulating the spare wires iotion means they are available for future use if required.

ROCKER SWITCH STYLE	NON-ROCKER SWITCH STYLE			
SPF.4D-2	SPF.4D-4	SPF.4D-3	SPF.4D-2	SPF.4D-1
		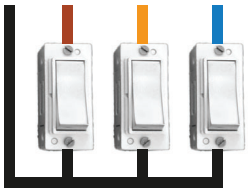		
SPF.4D-4				
	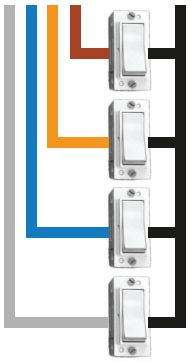			
WIRING COLOURS VIEWED FROM THE FRONT OF THE SWITCH PLATE				

NOTE: Orange wire may be yellow on older units

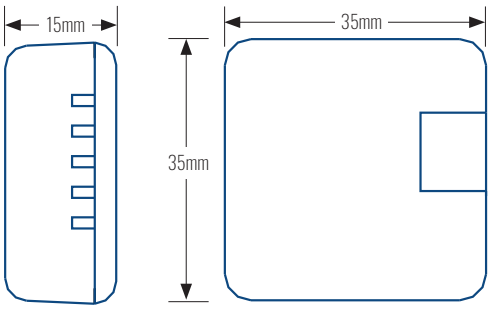

General Specification

Supply:	Two wire combined FELV signal and supply for connection to DALI or SPECS E-Bus
Weight:	20g
Tamb:	0 to 40°C

Part No.	Description
SPF.4D-4	Compact interface with flying leads for four switches.
SPF.4D-3	Compact interface with flying leads for three switches.
SPF.4D-2	Compact interface with flying leads for two switches.
SPF.4D-1	Compact interface with flying leads for one switch.

SIMMTRONIC

SIMMTRONIC

LIGHTING CONTROL MODULES

SPH.12+ CIRCUIT CONTROL MODULE



- Full addressability with complete independent control of each output.
- Switches up to four separate lighting circuits on any phase combination.
- Self-powering from any live input circuit, no separate supply required.
- Flexible configuration via SPECS Manager graphical software.
- Output status LEDs.
- Built in emergency test support.
- Overrise test switches.
- Large 6.35mm pitch terminals.
- Versions available with and without E-Bus Inputs Connection.

The SPH.12+ Circuit Control Module enhances the SPECS3 lighting control system by allowing fixed circuit areas such as stairwells, toilets, lobbies and corridors to be controlled by the system. Each system will control up to four 10amp lighting circuits on any phase combination. Note the SPH.12+ housing is 100mm wider than the SPH.12.

The system is fully addressable, each of the four outputs can be controlled fully independently. Four LEDs are provided to indicate the status of each Switched Live Output.

The module is controlled using a message format that includes error detection, using single unscreened twisted pair cable called SPECS M-Bus.

Output Wiring

Wiring to the module is simple, each control output has its own five way terminal block providing; Live In, Neutral In, Switched Live Out, Neutral Out and Permanent Live Out. Permanent Live Out should be used as the permanent or 'maintained' supply to emergency lighting battery packs. For the purpose of testing emergency lighting packs each SPH.12 output has an extra relay that can break the Permanent Live Out supply.

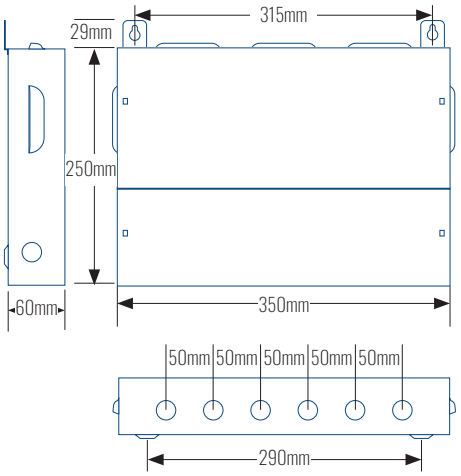

General Specification

Supply:	230VAC, 50Hz
Max Load:	2000W per output
Rating:	10 Amp Nominal, see overleaf
Weight:	2.5kg
Tamb:	0 to 40ºC
E-Bus Capacity:	12 Devices

CONTACT US
T | 01992 450126
E | SALES@SIMMTRONIC.COM
E | AFTERSALES@SIMMTRONIC.COM
W| WWW.SIMMTRONIC.COM

HQ | LONDON & SOUTH
WATERSIDE
CHARLTON MEAD LANE
HODDESDON, HERTFORDSHIRE
EN11 0QR

MIDLANDS & NORTH
BLOC
17 MARBLE STREET
MANCHESTER
M2 3AW

Location and Housing

The SPH.12+ module has a rugged grey powder coated steel construction with three fixing points and multiple 20mm conduit entries making it suitable for installation in the electrical riser cupboard. Removing the lower part of the two-part lid gives access to the wiring area only. The upper lid should remain in place to protect the control circuitry.

Installation

Supplied with a unique label (not shown) pre-numbered with its own four digit unique address and lighting circuit reference, this information should be used to ensure that each module is fitted and wired at the correct location as given on building drawings.

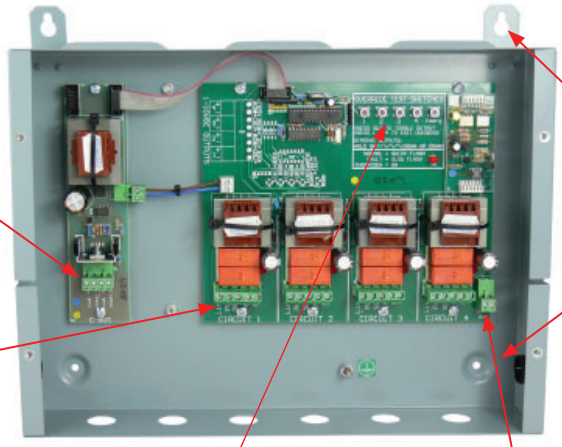

Optional E-Bus connection point (max no of E-Bus devices per SPH.12+ is 12).

Each output terminal block is clearly identified and marked as follows:
Lin: Live In
PL: Permanent Live
SL: Switched Live Out
N: Neutral

Override Switches for maintenance and testing. Operation of these switches will only temporarily override the circuits for 30 mins.

M-Bus connection.

Top and bottom fixings make mounting simple. Alternatively mount the module to trunking using conduit couplers/ bushes, this arrangement will generally remove the need for wall fixing.

SPH.12+ Wiring Schematic and Example

Normally each SPH input will be fed from its own breaker (10A Max). It is acceptable to loop one feed into several SPH inputs that the breaker rating does not exceed 10A.

Lin: Live feed from DB via 10A circuit breaker.

PL: Switchable 'Permanent Feed' to Battery Charge Units.

SL: Dedicated Feed Switching normal lighting load.

N: Neutral

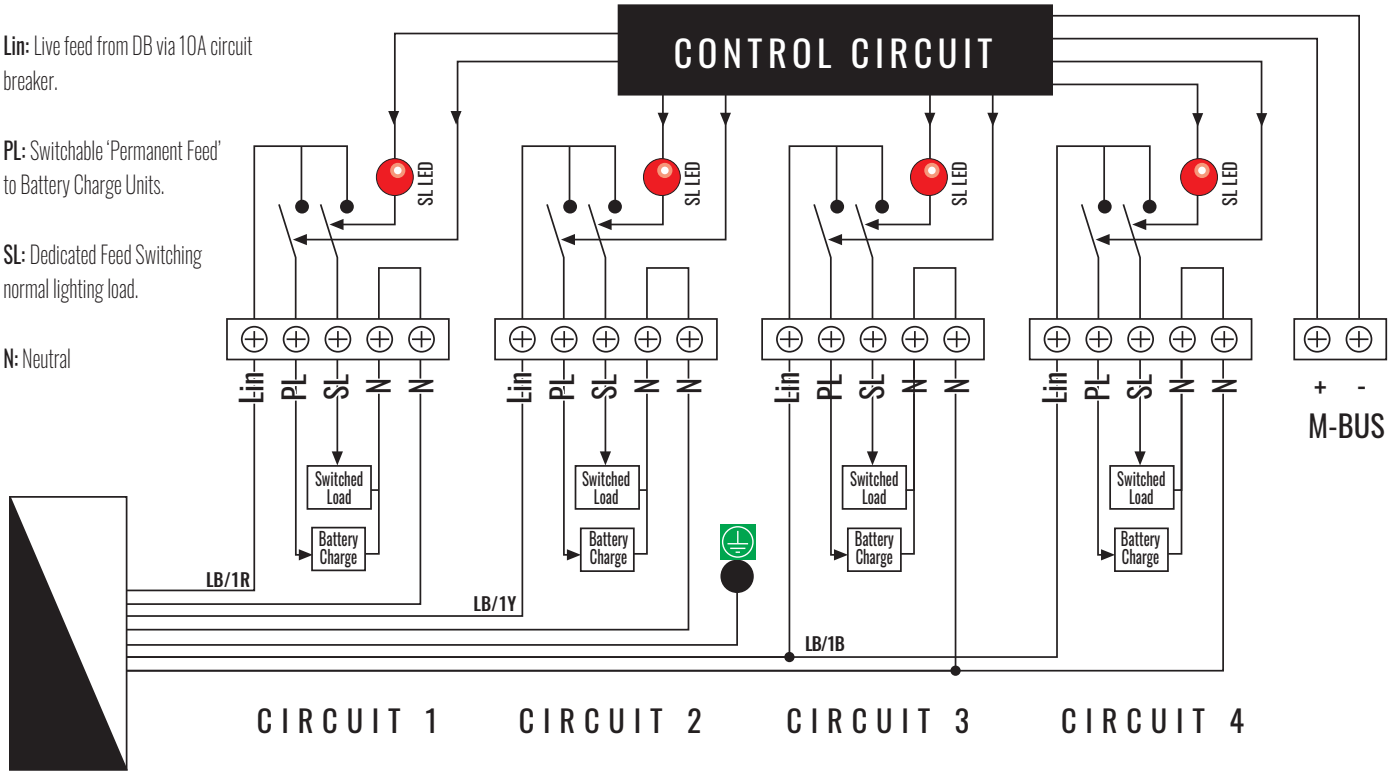

It is important that Circuits 1,2,3 & 4 are connected in the same order as marked on the drawings.

Part No.	Description
SPH.12+	Circuit control module with four individually addressable outputs and E-Bus input connections. W 354mm x H 254mm x D 55mm.

SIMMTRONIC

SIMMTRONIC

LIGHTING CONTROL MODULES

SPH.27 DALI HARDWIRED HUB



- Full addressability.
- Ideal for riser mounting.
- Capacity to drive 60 DALI devices.
- Built-in E-Bus drivers with capacity to drive 24 devices.
- Supports DALI Bus connected SPECS3 Multi-sensors.
- Status LEDs.

This unit enhances the SPECS3 lighting control system to provide DALI control to hardwired installations such as stairwells, toilets, lobbies and corridors. This unit is only suitable for control of luminaires fitted with DALI ballasts and DALI inverters, as all control is achieved digitally. This unit does not switch the power circuits, this means that lighting circuits are wired directly from the dist. board circuit breaker to the luminaires. This unit provides two DALI drivers; this reduces DALI delays and reduces the chance of losing all control should a bus fault occur. Each driver is capable of controlling half the total loading of 40 ballasts or transformers and 20 emergency inverters (see note). E-Bus drivers are also provided that can accommodate 2x12 devices like presence detectors and switches. Up to 2x12 SPECS3 Dual-Bus sensors can instead be connected to the DALI bus to facilitate luminiaire wiring. The unit is controlled using a message format that includes error detection, using single unscreened twisted pair cable called SPECS M-Bus.

Output Wiring

The unit should be supplied with 230VAC from a fused spur fitted with a 1Amp fuse. The mains supply connection terminal block, along with the M-Bus terminal block, are positioned at the top of the circuit board and are accessible by removing the top half of the lid. Removing the bottom half of the lid provides access to the DALI and E-Bus terminals. All terminal blocks are pluggable to facilitate easy wiring. Note that as stated above, the lighting circuits are not wired through this unit as it does not switch the load.

CONTACT US
T | 01992 450126
E | SALES@SIMMTRONIC.COM
E | AFTERSALES@SIMMTRONIC.COM
W| WWW.SIMMTRONIC.COM

HQ | LONDON & SOUTH
WATERSIDE
CHARLTON MEAD LANE
HODDESDON, HERTFORDSHIRE
EN11 0QR

MIDLANDS & NORTH
BLOC
17 MARBLE STREET
MANCHESTER
M2 3AW

Location and Installation

The unit's enclosure is a construction of rugged grey powder coated steel. 4 fixing points are provided along with multiple 20mm conduit entries, making it suitable for installation within an electrical riser cupboard. Care should be taken not to block the side and top air vents when mounting in close proximity with other equipment. The top lid carries a label with a unique 4-digit address and circuit reference (if known). This information should be used to ensure that each unit is fitted and wired at the correct location as detailed on the lighting drawings.

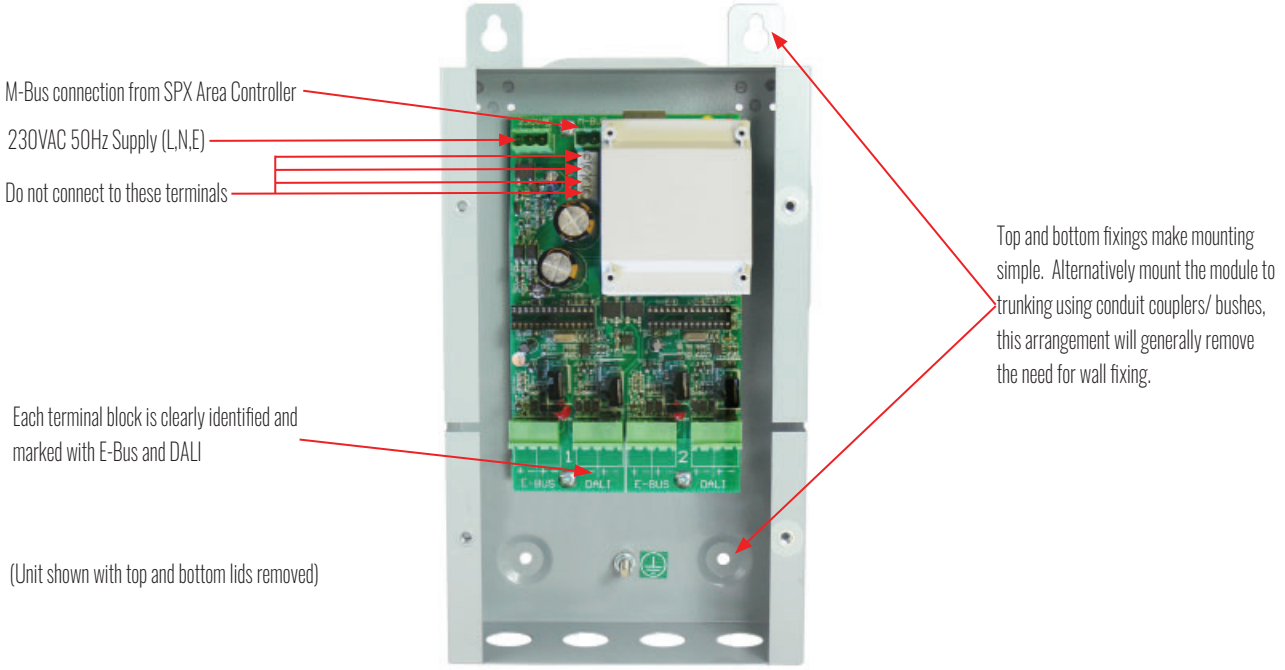

SPH.27 Typical Wiring Schematic

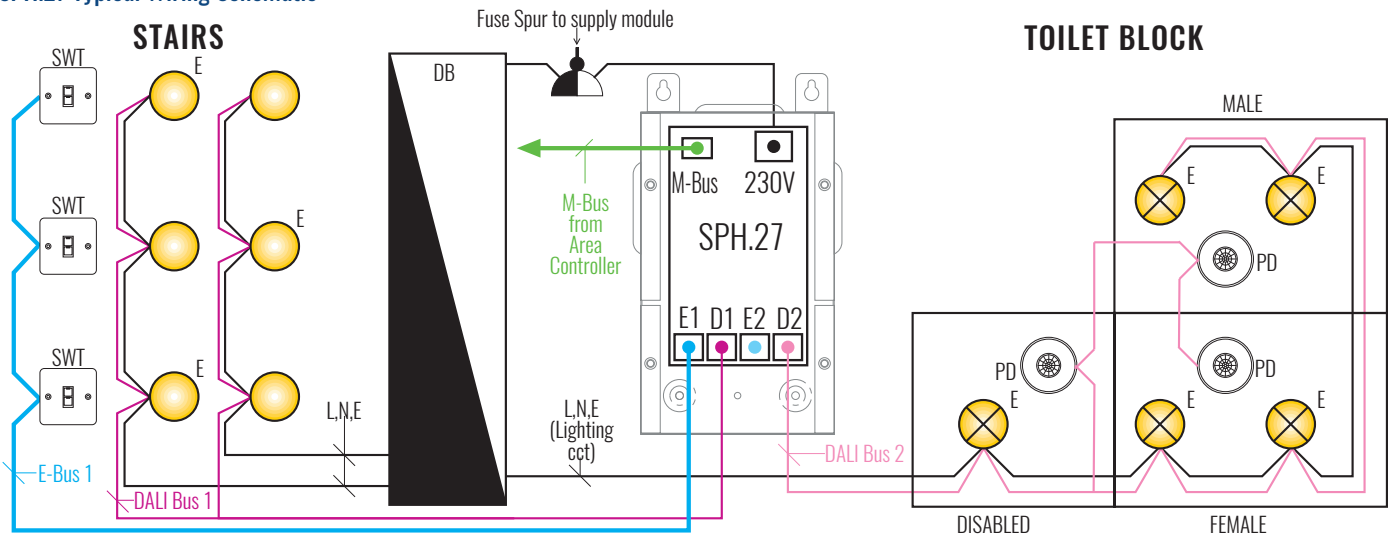

This is a typical schematic showing a SPH.27 controlling all the lighting and emergency DALI Invertors.

NOTES: SPH.27 can not be used with non-DALI Emergency Inverters, as only a 3 wire lighting circuit is used.

DALI Emergency Inverters can only be tested via the Simmtronic ATS software.

Area controller Test buttons can not be used.

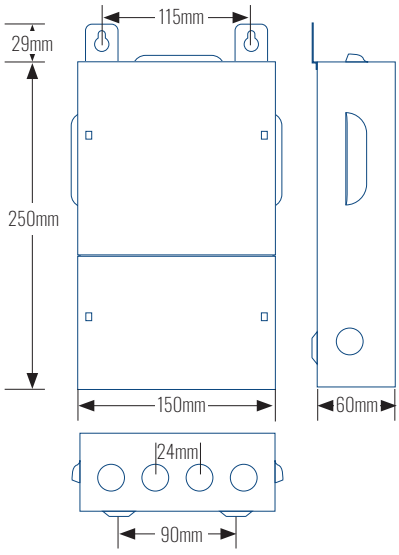

General Specification

Supply:	230VAC, 50Hz
Rating:	1 Amp (controller only)
Weight:	1.5kg
Tamb:	0 to 35°C
DALI Outputs:	2 x 20 ballasts, 2 x 10 emergency inverters 2 x 12 multi-sensors (not both)
E-Bus Capacity:	2 x 12 Devices (not both)

Part No.	Description
SPH.27	DALI Hardwired Lighting Control Module with SPECS3 Dual-Bus sensor capability

SIMMTRONIC

SIMMTRONIC

LIGHTING CONTROL MODULES

SPH.27-R DALI HARDWIRED HUB WITH RELAYS



- Full addressability
- Ideal for riser mounting
- Built-in E-Bus drivers with capacity to drive 24 devices
- Supports DALI Bus connected SPECS3 Multi-sensors
- Status LEDs
- Modular wiring friendly
- Mains circuit termination
- Two circuit module
- Lighting circuit marshalling provided
- Capacity to drive 60 DALI devices
- Optional relay switching

This unit enhances the SPECS3 lighting control system to provide DALI control to hardwired installations such as stairwells, toilets, lobbies and corridors. This unit is suitable where luminaires with DALI ballasts and DALI inverters are used. The unit is designed to take up to two lighting circuits and provides a Live Out, Switched Live and a Maintained Live for each. This gives the option to mix DALI and non-DALI equipment.

This unit provides two DALI drivers (one per circuit); this reduces DALI delays and reduces the chance of losing all control should a bus fault occur. Each driver is capable of controlling half the total loading of 40 ballasts or transformers and 20 emergency inverters (see note). E-Bus drivers are also provided that can accommodate 2 x 12 devices like presence detectors and switches. Up to 2 x 12 SPECS3 Dual-Bus sensors can instead be connected to the DALI bus to facilitate luminaire wiring. The unit is controlled using a message format that includes error detection, using a single unscreened twisted pair cable called SPECS M-Bus.

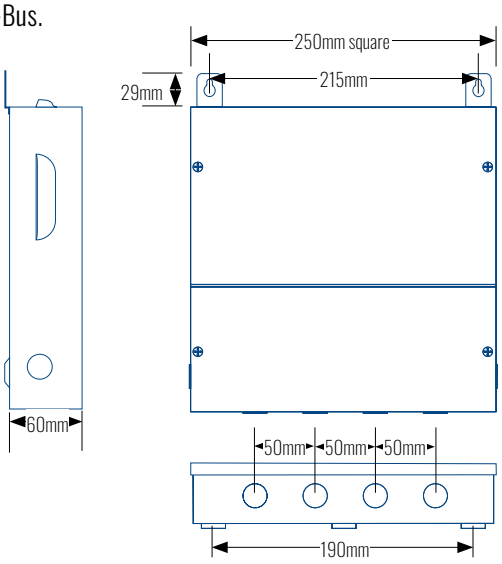

CONTACT US
T | 01992 450126
E | SALES@SIMMTRONIC.COM
E | AFTERSALES@SIMMTRONIC.COM
W| WWW.SIMMTRONIC.COM

HQ | LONDON & SOUTH
WATERSIDE
CHARLTON MEAD LANE
HODDESDON, HERTFORDSHIRE
EN11 0QR

MIDLANDS & NORTH
BLOC
17 MARBLE STREET
MANCHESTER
M2 3AW

Location and Installation

The unit's enclosure is a construction of rugged grey powder coated steel. Four fixing points are provided along with multiple 20mm conduit entries, making it suitable for installation within an electrical riser cupboard. Care should be taken not to block the side and top air vents when mounting in close proximity to other equipment. The top lid carries a label with the unit's own unique 4-digit address and circuit reference (if known). This information should be used to ensure that each unit is fitted and wired at the correct location as detailed on the lighting drawings.

Top and bottom fixings make mounting simple. Alternatively, mount the module to trunking using conduit couplers/bushes, this arrangement will generally remove the need for wall fixing.

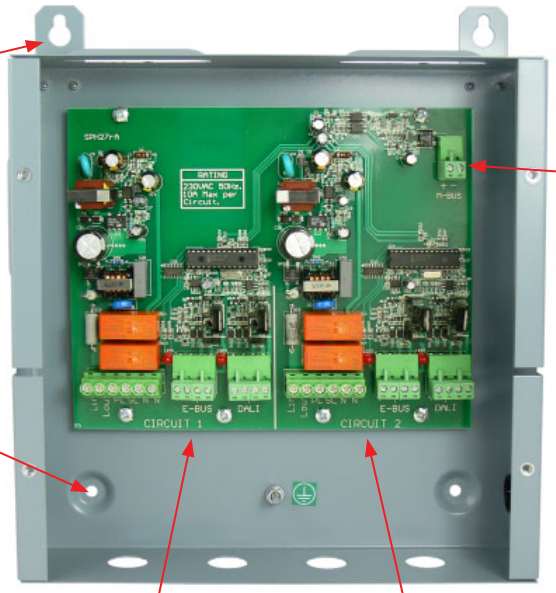

M-Bus connection from SPX Area Controller

Each circuit has terminal blocks clearly identified and marked as follows:
Lout: Live Out • PL: Permanent Live • SL: Switched Live Out • N: Neutral • + & - E - Bus • + & - DALI
(Unit shown with top and bottom lids removed)

SPH.27-R Typical Wiring Schematic

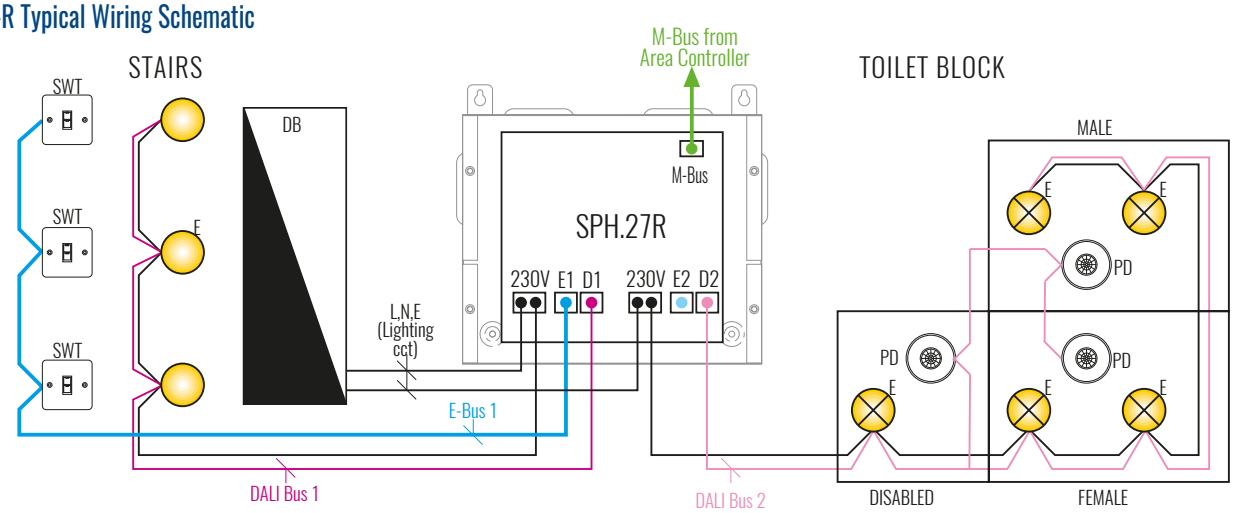

This is a typical schematic showing a SPH.27-R controlling all the lighting and emergency DALI Inverters.

NOTES: SPH.27-R can be used with non-DALI Inverters, if they are supplied from the 'Permanent Live' terminal.
Area controller Test buttons can only be used if the inverters are supplied from the 'Permanent Live' terminal.
DALI Emergency Inverters are intended to be tested via the Simmtronic ATS Software.

General Specification

Supply:	230VAC, 50Hz
Rating:	10 Amps per circuit
Weight:	1.5kg
Tamb:	0 to 30ºC
DALI Outputs:	2 x 20 ballasts, 2 x 10 emergency inverters, 2 x 12 multi-sensors (not both)
E-Bus Capacity:	2 x 12 Devices (not both)

Part No.	Description
SPH.27-R	DALI Circuit Control Module with SPECS3 Dual-Bus sensor capability

SIMMTRONIC

SIMMTRONIC

LIGHTING CONTROL MODULES

SPH.48 DALI HARDWIRED HUB



- Full addressability.
- Ideal for riser mounting.
- Built-in E-Bus drivers with capacity to drive 24 devices.
- Supports DALI Bus connected SPECS3 Multi-sensors.
- Status LEDs.

This unit enhances the SPECS3 lighting control system to provide DALI control to hardwired installations such as stairwells, toilets, lobbies and corridors. The SPH.48 is only suitable for control of luminaires fitted with DALI ballasts and DALI inverters, as all control is achieved digitally. The module does not switch the power circuits, which means that lighting circuits are wired directly from the distribution board circuit breaker to the luminaires.

This unit provides two DALI drivers which reduces DALI delays and the chance of losing all control should a bus fault occur. Each driver is capable of controlling half of the total loading of 80 ballasts or transformers and 40 emergency inverters (see note). E-Bus drivers are also provided to accommodate 2x12 devices such as presence detectors and switches. Up to 2x12 SPECS3 Dual-Bus sensors can instead be connected to the DALI bus to facilitate luminiaire wiring. The unit is controlled using a message format which includes error detection, using a single unscreened twisted pair cable called SPECS M-Bus.

Output Wiring

The unit should be supplied with 230VAC from a fused spur fitted with a 1Amp fuse. The mains supply connection terminal block, along with the M-Bus terminal block, are positioned at the top of the circuit board and are accessible by removing the top half of the lid. Removing the bottom half of the lid provides access to the DALI and E-Bus terminals. All terminal blocks are pluggable to facilitate easy wiring. Note that as stated above, the lighting circuits are not wired through this unit as it does not switch the load.

CONTACT US
T | 01992 450126
E | SALES@SIMMTRONIC.COM
E | AFTERSALES@SIMMTRONIC.COM
W| WWW.SIMMTRONIC.COM

HQ | LONDON & SOUTH
WATERSIDE
CHARLTON MEAD LANE
HODDESDON, HERTFORDSHIRE
EN11 0QR

MIDLANDS & NORTH
BLOC
17 MARBLE STREET
MANCHESTER
M2 3AW

Location and Installation

The unit's enclosure is a construction of rugged grey powder coated steel. 4 fixing points are provided along with multiple 20mm conduit entries, making it suitable for installation within an electrical riser cupboard. Care should be taken not to block the side and top air vents when mounting in close proximity with other equipment. The top lid carries a label with a unique 4-digit address and circuit reference (if known). This information should be used to ensure that each unit is fitted and wired at the correct location as detailed on the lighting drawings.

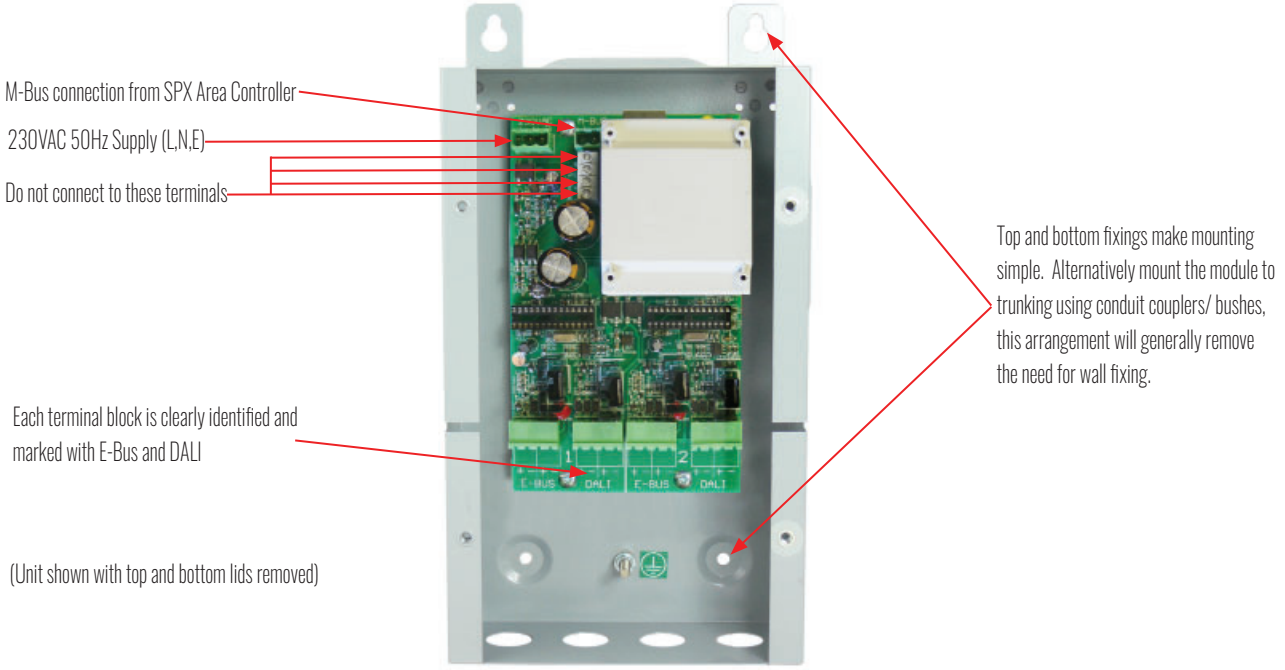

SPH.48 Typical Wiring Schematic

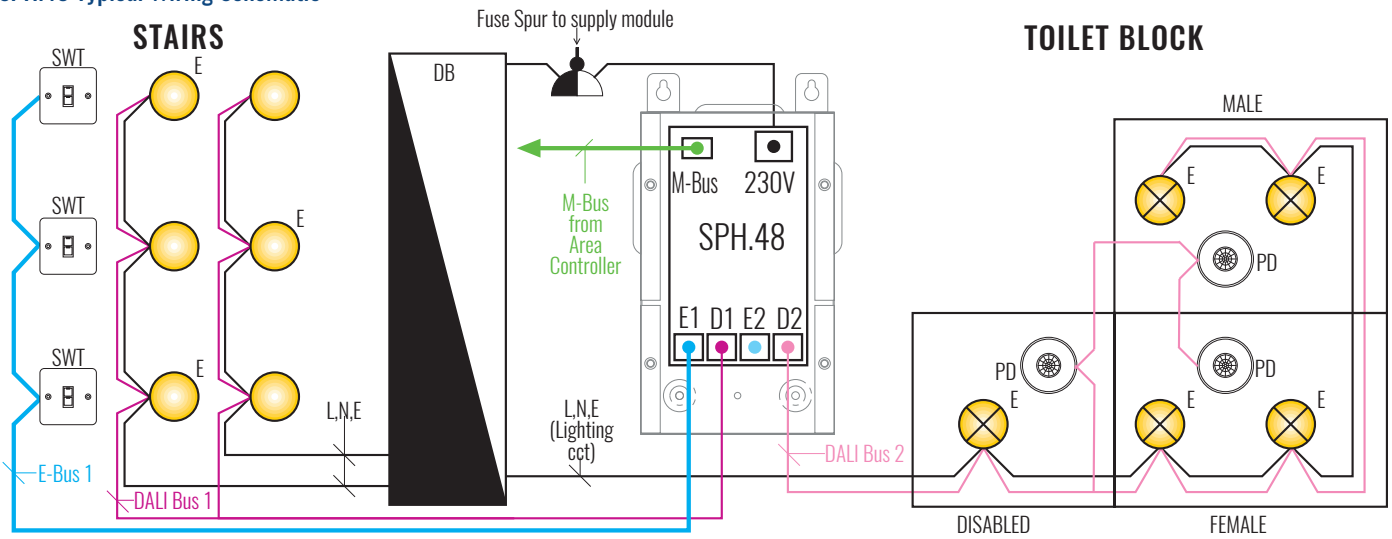

This is a typical schematic showing a SPH.48 controlling all the lighting and emergency DALI Invertors.

NOTES: SPH.48 can not be used with non-DALI Emergency Inverters, as only a 3 wire lighting circuit is used.

DALI Emergency Inverters can only be tested via the Simmtronic ATS software.

Area controller Test buttons can not be used.

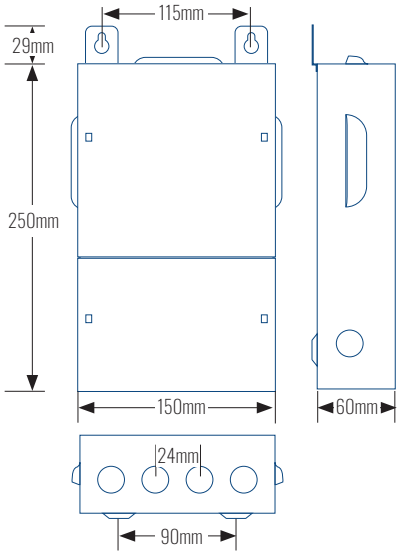

General Specification

Supply:	230VAC, 50Hz
Rating:	1 Amp (controller only)
Weight:	1.5kg
Tamb:	0 to 35ºC
DALI Outputs:	2 x 40 ballasts, 2 x 20 emergency inverters 2 x 12 multi-sensors (not both)
Nominal output voltage:	16V mAmp maximum, single master
E-Bus Capacity:	2 x 12 Devices (not both)

Part No.	Description
SPH.48	DALI Hardwired Lighting Control Module with SPECS3 Dual-Bus sensor capability

SIMMTRONIC

SIMMTRONIC

LIGHTING CONTROL MODULES

SPH.48-R DALI HARDWIRED HUB WITH RELAYS



- Full addressability.
- Ideal for riser mounting.
- Built-in E-Bus drivers with capacity to drive 24 devices.
- Supports DALI Bus connected SPECS3 Dual-Bus sensors.
- Status LEDs.
- Modular wiring friendly.
- Mains circuit termination.
- Two circuit module.
- Lighting circuit marshalling provided.
- Optional relay switching.

This unit enhances the SPECS3 lighting control system to provide DALI control to hardwired installations such as stairwells, toilets, lobbies and corridors. This unit is suitable where luminaires with DALI ballasts and DALI inverters are used. The unit is designed to take up to two lighting circuits and provides a Live Out, Switched Live and a Maintained Live for each. This give the option to mix DALI and non-DALI equipment.

This unit provides two DALI drivers (one per circuit); this reduces DALI delays and reduces the chance of losing all control should a bus fault occur. Each driver is capable of controlling half the total loading of 80 ballasts or transformers and 40 emergency inverters (see note). E-Bus drivers are also provided that can accommodate 2 x 12 devices like presence detectors and switches. Up to 2 x 12 SPECS3 Dual-Bus sensors can instead be connected to the DALI bus to facilitate luminaire wiring. The unit is controlled using a message format that includes error detection, using a single unscreened twisted pair cable called SPECS M-Bus.

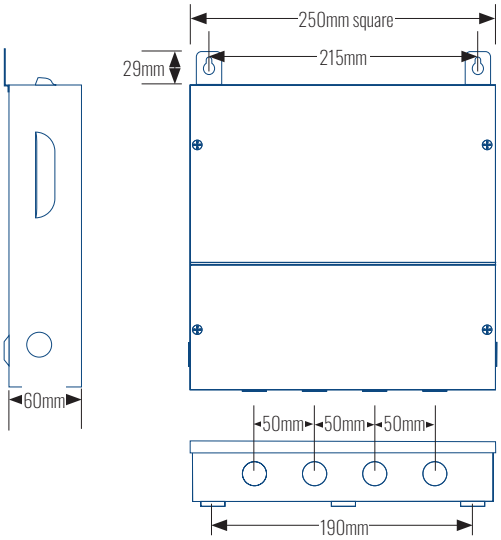

CONTACT US
T | 01992 450126
E | SALES@SIMMTRONIC.COM
E | AFTERSALES@SIMMTRONIC.COM
W| WWW.SIMMTRONIC.COM

HQ | LONDON & SOUTH
WATERSIDE
CHARLTON MEAD LANE
HODDESDON, HERTFORDSHIRE
EN11 0QR

MIDLANDS & NORTH
BLOC
17 MARBLE STREET
MANCHESTER
M2 3AW

Location and Installation

The unit's enclosure is a construction of rugged grey powder coated steel. 4 fixing points are provided along with multiple 20mm conduit entries, making it suitable for installation within an electrical riser cupboard. Care should be taken not to block the side and top air vents when mounting in close proximity with other equipment. The top lid carries a label with a unique 4-digit address and circuit reference (if known). This information should be used to ensure that each unit is fitted and wired at the correct location as detailed on the lighting drawings.

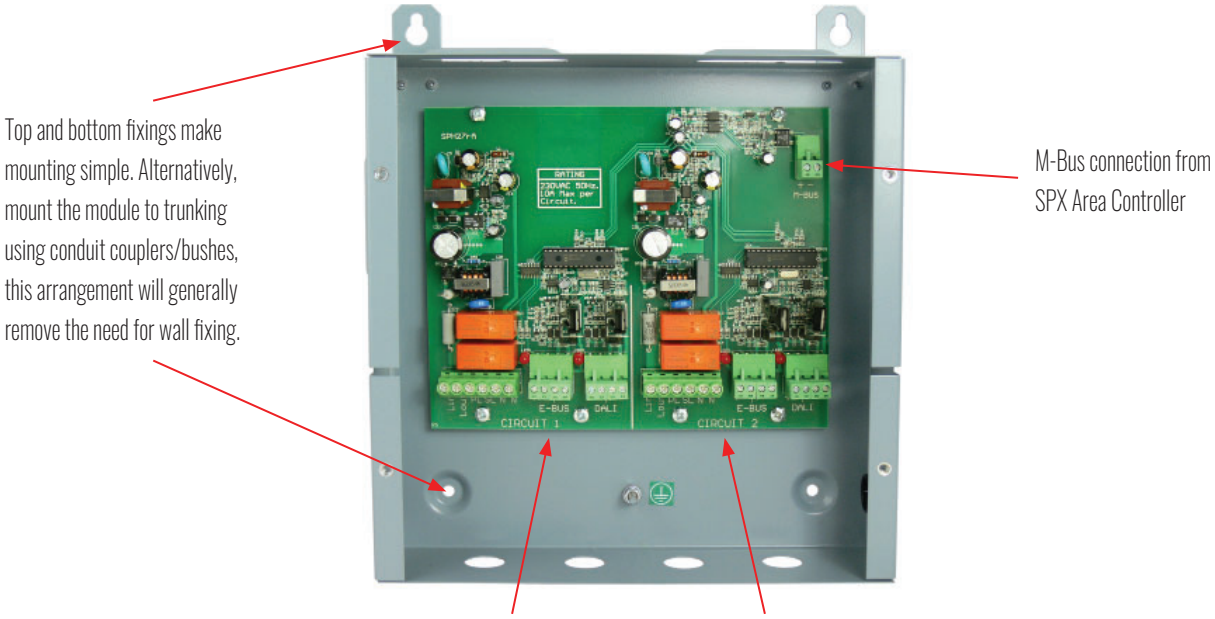

Each circuit has terminal blocks clearly identified and marked as follows:

Lout: Live Out • PL: Permanent Live • SL: Switched Live Out • N: Neutral • + & - E - Bus • + & - DALI

(Unit shown with top and bottom lids removed)

SPH.48-R Typical Wiring Schematic

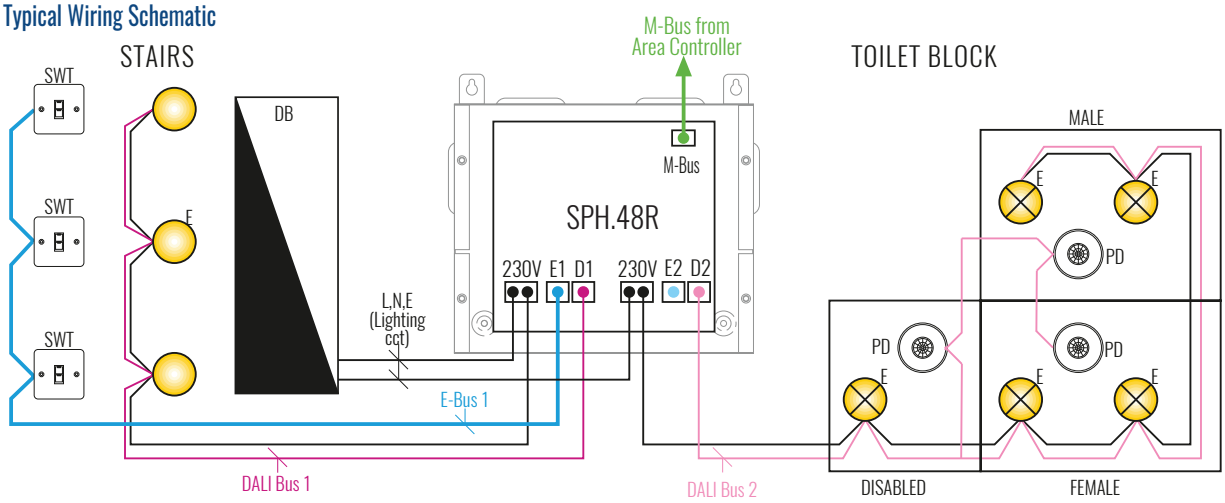

This is a typical schematic showing a SPH.48-R controlling all the lighting and emergency DALI Inverters

NOTES: SPH.48-R can be used with non-DALI Inverters if they are supplied from the 'Permanent Live' terminal.

Area controller Test buttons can only be used if the inverters are supplied from the 'Permanent Live' terminal.

DALI Emergency Inverters are intended to be tested via the Simmtronic ATS Software.

General Specification

Supply:	230VAC, 50Hz
Rating:	10 Amps per circuit
Weight:	1.5kg
Tamb:	0 to 30ºC
DALI Outputs:	2 x 40 ballasts, 2 x 20 emergency inverters 2 x 12 multi-sensors (not both)
E-Bus Capacity:	2 x 12 Devices (not both)

Part No.	Description
SPH.48-R	DALI Circuit Control Module with SPECS3 Dual-Bus sensor capability

SIMMTRONIC

SIMMTRONIC

SWITCHES

SPK.9 INTELLIGENT SWITCH PLATE



- Addressable wall mounted intelligent Switch Plate.
- Programmable Scene, Zonal or individual control modes.
- Individually programmable buttons with fade rates.
- Flexible configuration via SPECS Manager graphical software.
- Available with or without button LED indicators.
- Simple FELV twisted pair bus connection.
- 2,3,4 or 8 button with multi-gang options.

The SPK.9 is an evolution of the popular SPK.8 and is an intelligent replacement for the conventional light switch. Each button on the SPK.9 may be individually configured to select or cycle between lighting scenes with adjustable fade rates; different buttons can also be used to control different zones again with multi-channel scene setting. The SPK.9 is available primarily in 2,3 and 4 button versions; several SPK.9s can be combined when more than 4 buttons are required and up to 8 buttons can be provided on a single 85mm² plate. The SPK.9 is connected using the twisted pair SPECS E-Bus which provides both power and communication. Two or more SPK.9 can be locally looped together on E-Bus so that there need only be one twisted pair cable to connect to even the largest switch plate.

SPECS Manager software can uniquely address, identify and continuously display the status of each SPK.9 on the system. It is also possible to remotely control each SPK.9 from within the SPECS Manager.

Operating Modes

The SPK.9 is programmable to perform a wide variety of control functions; the most commonly used operating modes are described here.

Scene Mode

Scene mode is used to control one group of lighting to different scenes. A short press on each button will select its programmed scene and turn on its LED indicator, other button LEDs will go out. The top button is usually configured as High processing to Minimum for the bottom button. A short press on any button can also be configured to cycle between scenes in predefined pattern, this can be useful when using a 2 button SPK.9, the top button is used to cycle and the bottom button to turn off. Each button can also be individually programmed to select a fade rate and whether to work with or override other system features like occupancy.

Zonal Mode

Zonal mode is used to control one group, or 'zone' of lighting from each button of the SPK.9. A short press of each button may be used to select one scene for its zone and a long press to select another scene that is usually Minimum. A short press will turn the button LED indicator on, a long press will turn it off, other button LEDs are left unaffected. The short and long press can also be configured to cycle between scenes in a predefined pattern, often a short press would cycle and a long press would turn off. Each button can also be individually programmed to select a fade rate and whether to work with or override other system features like occupancy.

CONTACT US
T | 01992 450126
E | SALES@SIMMTRONIC.COM
E | AFTERSALES@SIMMTRONIC.COM
W| WWW.SIMMTRONIC.COM

HQ | LONDON & SOUTH
WATERSIDE
CHARLTON MEAD LANE
HODDESDON, HERTFORDSHIRE
EN11 0QR

MIDLANDS & NORTH
BLOC
17 MARBLE STREET
MANCHESTER
M2 3AW

Connects directly to E-Bus (twisted pair cable), Terminal block connections label labeled "+" and "-" and the Black to the "-".

All devices are addressed and should be installed in the locations indicated on the contract drawings.

Fit to 25mm deep back box, with side fixings only using screw supplied.

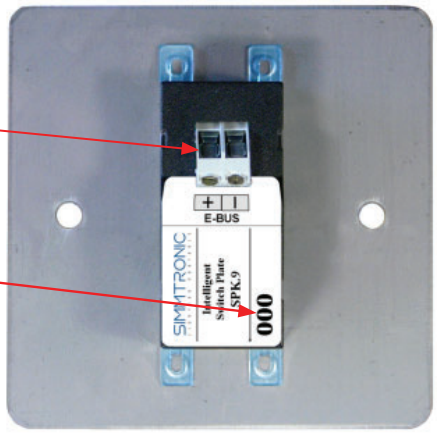

Notes

All switch plates are supplied with the Brushed Stainless Steel finish as standard, other finishes and switch combinations can be provided as a special upon request. Other LED colours are available as a special when using chrome buttons.

EXAMPLE SCENE SWITCH PLATES

Part No.	Description
SPK.9-4-SP1	4 Button switch plate 3 Scenes and Off.
SPK.9-4+3-SP3	7 Button switch plate 4 Scenes and Off with Up and Down.
SPK.9-4+2-SP5	6 Button switch plate 3 Scenes and Off with Up and Down.
SPK.9-2-SP7	2 Button switch plate 2 Scenes Legend.
SPK.9-4-SP9	4 Button switch plate On and Off with Up and Down

EXAMPLE SCENE SWITCH PLATES

Part No.	Description
SPK.9-4+1-SP2	5 Button switch plate 4 Scenes and Off.
SPK.9-4+4-SP4	8 Button switch plate 7 Scenes and Off.
SPK.9-4+4+2-SP6	10 Button switch plate 7 Scenes and Off with Up and Down.
SPK.9-4+4-SP8	2 x 4 Button switch plate 2 x 3 Scene & Off Legend.
SPK.9-4-SP10	4 Button switch plate On and Off with Up and Down

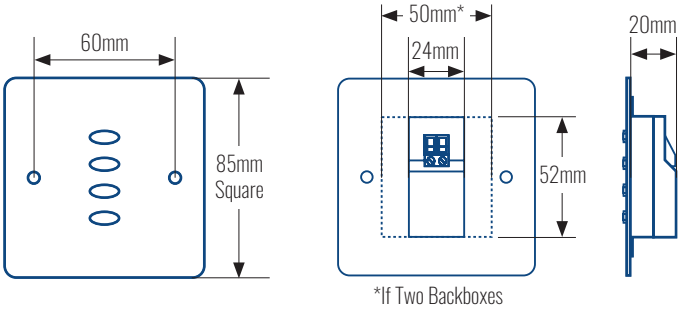

General Specification

Supply:	Two wire combined FELV signal and supply connection to SPECS E-Bus
Weight:	120g (4 button)
Tamb:	0 to 40°C
LED Colour:	Blue (Standard)

SIMMTRONIC

SIMMTRONIC

SENSORS

SPU.6-C1 SURFACE MOUNT COMPACT DUAL BUS SENSOR



- Addressable intelligent Universal Sensor
- Best or conduit box mountable
- 360 degree PIR presence detection
- Wide range linear photocell
- Programmable infra-red receiver
- Flexible configuration via SPECS Manager graphical software
- Simple E-Bus or DALI connection
- Self test LED indicator
- Compact circular design

The SPU.6-C1 is a sophisticated intelligent universal sensor which combines high performance presence detection, light level sensing and infra-red control into one compact unit.

The sensor can either plug into an LCM's DALI line or the LCM's E-Bus from which both power and communication are achieved. (DALI line connection is only compatible with 9 port LCMs.) The sensor automatically identifies itself on either bus and continuously reports its status and current readings.

SPECS Manager software can uniquely address each sensor and configure each control element to different lighting groups as required. Photocell readings and presence detection history may be dynamically displayed for all sensors connected to the system.

Presence Detection

360 degree presence detection is achieved using a high quality quad element sensor and fresnel lens combination. The presence detector element may be configured to control any lighting group within the SPECS system; a separate group may also be used to hold background lighting on to a lower dimming level. By working with other detectors in overlapping groups, an excellent control regime may be achieved. An additional feature of the device is that different presence detection modes and sensitivites can be remotely programmed.

Photocell Control

A silicon photodiode provides accurate and linear light level measurement over a wide 2000 lux range with 2 lux resolution. The light level reading may be configured to control any combination of lighting groups within the SPECS system, for example to achieve progressive dimming of window rows from a single photocell.

Infra-Red Reciever

The Infra-red receiver within the device will receive commands from the SPECS IR remote (SPI.6 only). The Infra-red commands may be configured either to control individual or multiple lighting groups with dimming or on/off control. The IR system is directional and unaddressed so that a common transmitter may be used to control multiple sensors.

CONTACT US
T | 01992 450126
E | SALES@SIMMTRONIC.COM
E | AFTERSALES@SIMMTRONIC.COM
W| WWW.SIMMTRONIC.COM

HQ | LONDON & SOUTH
WATERSIDE
CHARLTON MEAD LANE
HODDESDON, HERTFORDSHIRE
EN11 0QR

MIDLANDS & NORTH
BLOC
17 MARBLE STREET
MANCHESTER
M2 3AW

Installation

Mount base on to circular conduit box, Besa box, or a flat surface using suitable pan head screws through the two screw slots; screw threads on conduit boxes are typically 4mm. Feed the E-Bus/DALI cable with plug through the cone section and clip the cone section to the base, ensuring that the cone is fully clipped to the base through 360 degrees. Plug the bus cable into the sensor and using the twist lock tool or fingers, push and twist lock the sensor in the cone housing. Removal of the sensor is the reverse, due to bus cable tension a slight pulling action may be required to extract the sensor from the cone. The cone and base are separated by either pressing the cone inwards at 90 degrees to the two splits in the clip feature or by inserting a small flat blade screwdriver in either of the two clip feature splits and twisting the blade.

Unlocked - use tool or fingers to push and twist





Locked into position, use tool to twist and remove

E-Bus/DALI plug and socket connection. (Both E-Bus and DALI are polarised, so ensure correct connection)



E-Bus address and installation location information. Check against drawing for correct location

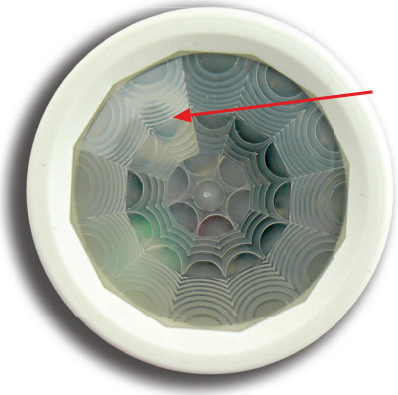

Photocell with baffle looks through lens

Actual Size

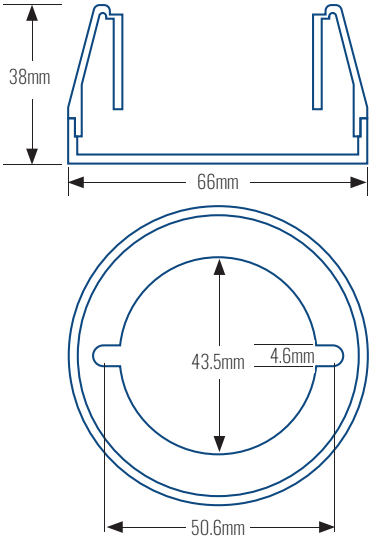

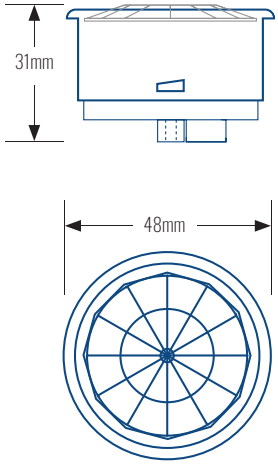

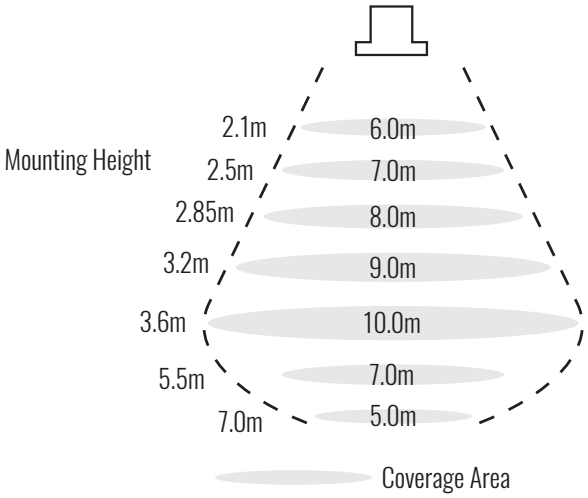

General Specification

Supply:	Two wire combined signal and supply connection via SPECS E-Bus or DALI
Weight:	50g
Tamb:	0 to 40ºC
View Field:	d = 2.8 x h

Fixing Holes

The hole slots in the base are suitable for mounting on circular conduit (Besa) boxes using a 4mm screw having fixing centres between 50mm and 50.8.

Standard colour is white (RAL 9003). Available in Black (-B RAL 9005).

Part No.	Description
SPU.6-C1	DALI-Bus Universal Sensor Round Service Mount

ISSUE G

SIMMTRONIC

SIMMTRONIC

SENSORS

SPU.6-S RECESSED UNIVERSAL SENSOR WITH PHOTOCELL & PIR



- Addressable intelligent Universal Sensor
- Suitable for suspended ceilings or plasterboard
- 360 degree PIR presence detection
- Wide range linear photocell
- Programmable infra-red receiver
- Flexible configuration via SPECS Manager graphical software
- Simple E-Bus or DALI connection
- Self test LED indicator
- Compact circular design
- Cable management clip and cover system

The SPU.6-S is a sophisticated ceiling mounted intelligent universal sensor which combines high performance presence detection, light level sensing and infra-red control into one compact unit.

The sensor can either plug into an LCM's DALI line or the LCM's E-Bus from which both power and communication are achieved. (DALI line connection is only compatible with SPH.27, SPH.27R, SPV.56, SPV.57 type LCMs.) The sensor automatically identifies itself on either bus and continuously reports its status and current readings.

SPECS Manager software can uniquely address each sensor and configure each control element to different lighting groups as required. Photocell readings and presence detection history may be dynamically displayed for all sensors connected to the system.

Presence Detection

360 degree presence detection is achieved using a high quality quad element sensor and fresnel lens combination. The presence detector element may be configured to control any lighting group within the SPECS system; a separate group may also be used to hold background lighting on to a lower dimming level. By working with other detectors in overlapping groups, an excellent control regime may be achieved. An additional feature of the device is that different presence detection modes and sensitivites can be remotely programmed.

Photocell Control

The SPU.6-S utilises a silicon photodiode to provide accurate and linear light level measurement over a wide 2000 lux range with 2 lux resolution. The light level reading may be configured to control any combination of lighting groups within the SPECS system, for example to achieve progressive dimming of window rows from a single photocell.

Infra-Red Reciever

The Infra-red receiver within the SPU.6-S will receive commands from the SPECS IR remote (SPI.6 only). The Infra-red commands may be configured either to control individual or multiple lighting groups with dimming or on/off control. The IR system is directional and unaddressed so that a common transmitter may be used to control multiple sensors.

CONTACT US
T | 01992 450126
E | SALES@SIMMTRONIC.COM
E | AFTERSALES@SIMMTRONIC.COM
W| WWW.SIMMTRONIC.COM

HQ | LONDON & SOUTH
WATERSIDE
CHARLTON MEAD LANE
HODDESDON, HERTFORDSHIRE
EN11 0QR

MIDLANDS & NORTH
BLOC
17 MARBLE STREET
MANCHESTER
M2 3AW

Installation

The sensor is fitted to a circular ceiling hole using retractive spring fixings. This arrangement allows the unit to be fixed when there is no access above the ceiling.

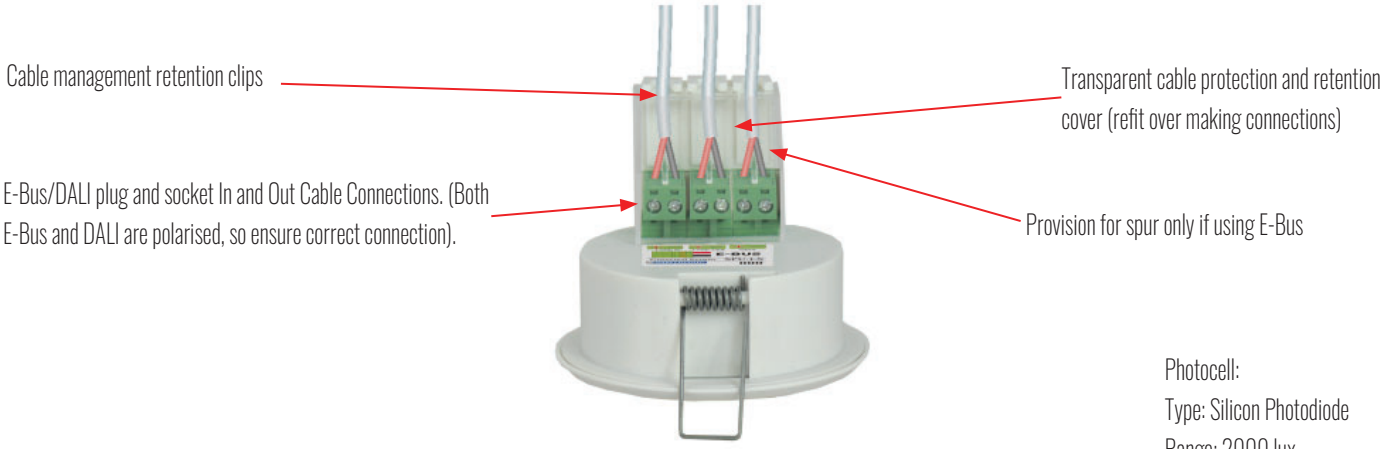



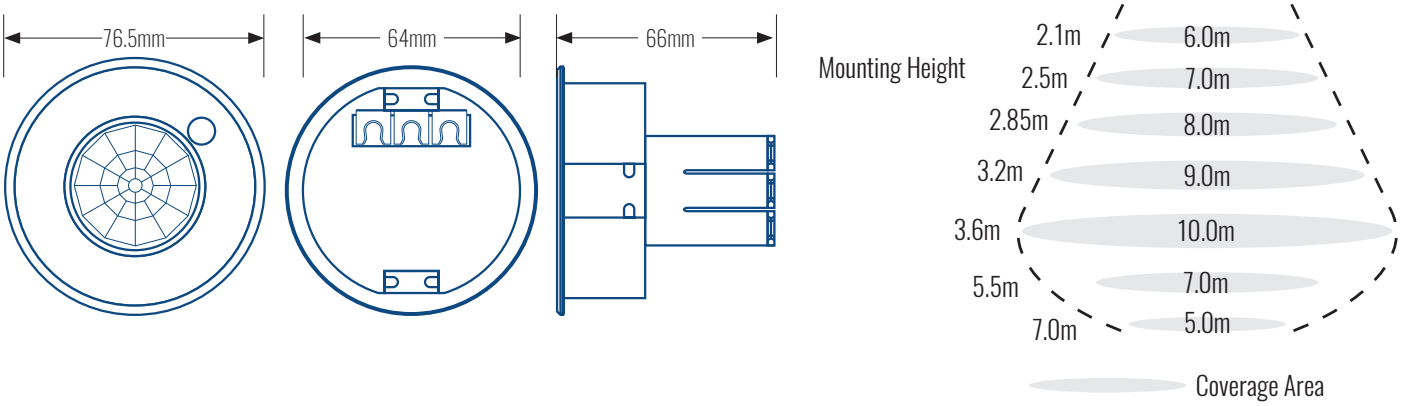

General Specification

Supply:	Two wire combined signal and supply connection via SPECS E-Bus or DALI
Weight:	60g
Tamb:	0 to 40ºC
View Field:	d = 2.8 x h

Standard colour is white (RAL 9003). Available in Black (-B RAL 9005).

Part No.	Description
SPU.6-S	DALI-Bus Universal Sensor

Circular Ceiling Fixing Hole

The hole must be large enough to accept the 64.0mm diameter main body, whilst being well within 76.5mm outer flange, so that the sensor may be easily positioned to cover the hole when in place. The springs fold back within the 64.0 diameter although, depending on ceiling tile thickness, a slightly larger diameter may allow for ease of fixing. Given the above, a factory cut hole of 66.0mm diameter is recommended - this will work well with solid or sandwich tiles in the range 1-20mm thickness. For specialist applications and clarification, space samples are available for trial fixing.

SIMMTRONIC

SIMMTRONIC

LIGHTING CONTROL MODULES

SPV.92 LIGHTING CONTROL MODULES



- Ideal for False Ceiling Applications.
- Full addressability with complete independent control of each port.
- 9 port module allows an efficient 3 by 3 luminaire pattern.
- Single twisted pair cable connection for sensors / switches (E-Bus).
- Flexible configuration via SPECS Manager graphical software.
- Switching or dimming with easy upgrade path.
- Analog, DSI or DALI versions.
- 6 pole sockets, accepts 3 pole plug for standard luminaires.
- External fuse and LED operating indicator.
- Built in emergency test and load shedding support.
- Built in fade processing.

The SPV.92 digitally controlled Lighting Control Module is a key building block in the advanced SPECS3 lighting control system. With 9 output ports, this module allows large areas to be lit in an efficient 3 by 3 luminaire pattern and acts as an efficient marshalling box for rapid and cost effective installation of luminaires with factory fitted flying leads. Each of the 6 pole sockets allows 3 pole plugs to be used for standard luminaires, 6 pole plugs are required for dimming fittings or those requiring a permanent live for emergency inverters. For the purpose of testing emergency inverters an independent relay within the SPV.92 is used to break the permanent live supply to all 9 sockets.

Control Features

All versions of the SPV.92 have complete full addressability of all 9 ports. This ensures that any control device may control any group of lights, this is a system wide feature with no limitation between areas and number of devices involved. The SPV.92-SU is a switching only version, the SPV.92-A provides fully independent 1-10V dimming control on each of the 9 ports and the SPV.92-D and Da provide fully independent digital DSI or DALI control to an accuracy of better than 1%. Any SPV.92-SU can be upgraded to DALI dimming, this can be done in situ via the headend. Any other type of change ie to DSI, or change of address requires the LCM to be replaced or returned to Simmtronic for an upgrade.

The SPV.92 supports power interrupted load shedding by initially only energising ports 1 and 5 which should be used to feed essential lighting. The module will then wait to receive any load shedding commands which may be used to limit energy consumption, after 8 seconds, if none are received, all ports will energise.

Ease of Installation

The SPV.92 is controlled using a message format that includes error detection. Using a twisted pair cable this signal can be integrated into the mains supply system allowing one pluggable connection to the SPV.92 with no delicate bus wiring. All input connections have integral strain relief 'clip overs' that stop the plugs from being inadvertently pulled out. By using the flexible external fixings, which are integrated into the casework, the SPV.92 can be installed and connected in one visit - fix and forget.

CONTACT US
T | 01992 450126
E | SALES@SIMMTRONIC.COM
E | AFTERSALES@SIMMTRONIC.COM
W| WWW.SIMMTRONIC.COM

HQ | LONDON & SOUTH
WATERSIDE
CHARLTON MEAD LANE
HODDESDON, HERTFORDSHIRE
EN11 0QR

MIDLANDS & NORTH
BLOC
17 MARBLE STREET
MANCHESTER
M2 3AW

Installation

This LCM should only be installed in “no operator access” areas where access is only achieved by use of a tool.







If not factory fitted with a flying lead, then the supply end cover may be removed to access supply and bus wiring terminals. The LCM must be installed in accordance with the current IEE wiring Regulations and a readily accessible disconnection device (i.e. Circuit breaker or fused spur, double pole with contact separation of 3mm) shall be incorporated in the building installation wiring. The rating of which should not exceed 16Amps.

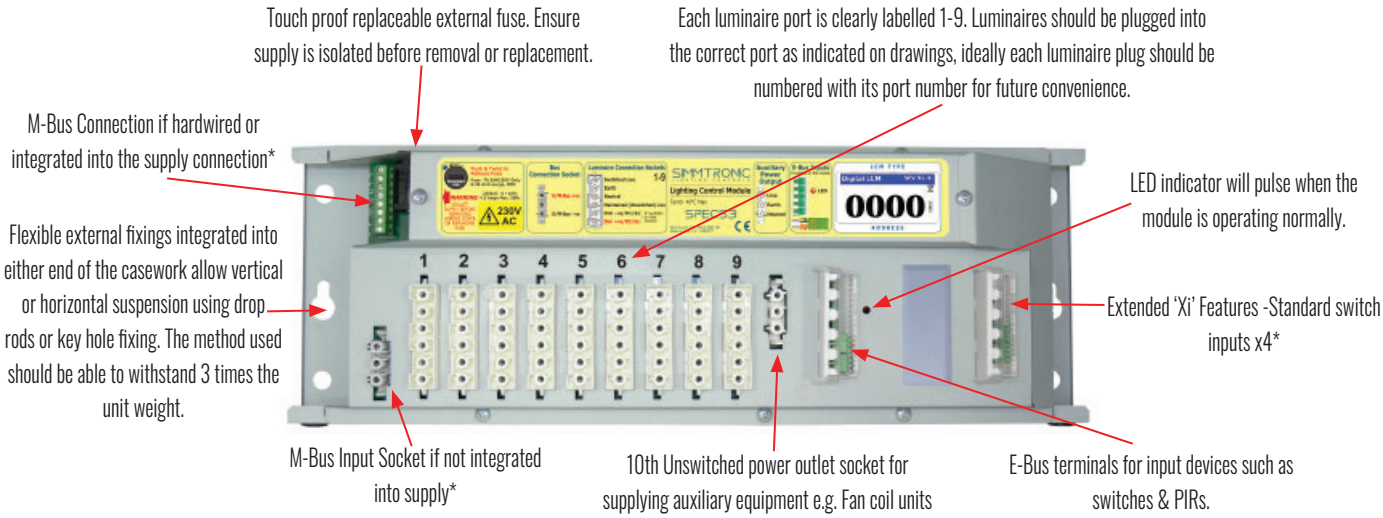

* If any of these bus cables are run with mains wiring then ensure the cable has the correct voltage proof rating. Simmtronic approved cables for E-Bus and M-Bus connections are suitable for incorporating with single phase wiring only. See Simmtronic Cable Data Sheet for more details and suitable cable types.

Notes

Until the SPECS SPX area controller is turned on the SPV.92 will not receive any control signals, this will cause all luminaire ports to default to ON 8 seconds after power up. Luminaire and other connection plugs are not provided with this LCM. They are available separately.

General Specification

Supply:	230VAC, 50Hz
Max Load:	1000W (6 lums max per port)
Fuse:	20mm, 6.3A (T)
Weight:	2.5kg
Tamb:	0 to 40ºC
E-Bus Capacity:	Up to 10 devices

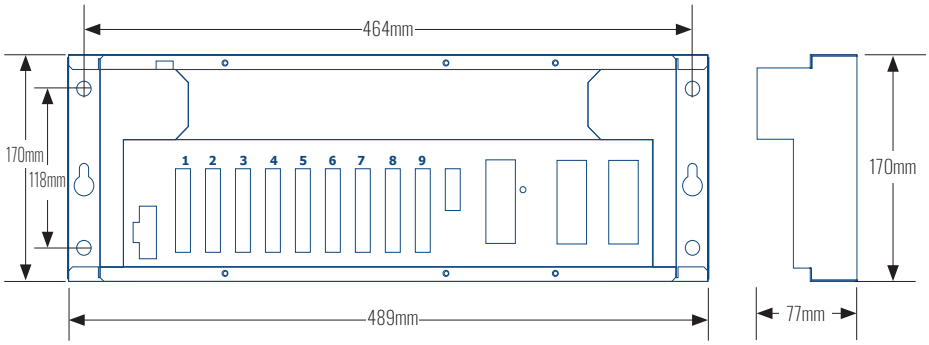

Part No.	Description
SPV.92-A	9 individually addressable sockets with 1-10V dimming control signal.
SPV.92-D	9 individually addressable sockets with DSI dimming control signal (Only ports 8 and 9 have relays).
SPV.92-DR	9 individually addressable sockets with DSI dimming (All 9 ports have relays).
SPV.92-Da	9 individually addressable sockets with DALI dimming control signal (Only ports 8 and 9 have relays).
SPV.92-DaR	9 individually addressable sockets with DALI dimming control signals(All 9 ports have relays).
SPV.92-SU	9 individually addressable sockets with no dimming control signal(All 9 ports have relays).

SIMMTRONIC

SIMMTRONIC

AREA CONTROLLER EQUIPMENT

SPX.320 AREA CONTROLLER



- High performance networked area controller.
- Flexible configuration via SPECS Manager graphical software.
- Mains integrated or Bus wired lighting control signalling.
- Pre-commission and override test mode.
- Maintains configuration and time keeping without power.
- Built in load shedding and alarm outputs.
- Built in Control Panel with:
  - Manual Keyswitch Lock
  - Override and Normal Mode selection
  - Emergency Test and Check Mode selection
  - System status indicators
  - Configurable “SoftPlate”.

The SPX.320 Area Controller is at the heart of the advanced SPECS3 lighting control system. The controllers is sited at a lighting distribution board and will provide autonomous control of all lighting fed from the board.

Sensor and LCM Connection

All sensors and switch plates within the area can either be connected back to the SPX.320, using a simple unscreened twisted pair cable called E-Bus, or plugged into the nearest LCM. E-Bus may be connected in a radial or spurred fashion and provides each E-Bus device with both power and communications. The SPX uses information and commands provided by the E-Bus devices to control the lighting settings within the area.

As standard the SPX will communicate with LCMs using the rugged mains tolerant SPECS M-Bus. M-Bus can be either a separate twisted pair bus or integrated into a modular wiring/track system. With SPECS M-Bus technology E-Bus devices can be plugged directly into the LCM. Compatibility with legacy mainsbourne systems can still be achieved with this Area Controller. Optionally an F-Bus interface can be added to allow SPR.20 Bluetooth Nodes to be added to the SPECS3 system.

SPX Networking

Within all installation, all SPXs are networked together. The network allows information to flow seamlessly between controllers and provides for system programming and monitoring. Once configured, the SPX runs stand-alone, with each SPX maintaining its data and internal time clock during loss of power.

SPECS3 offers a choice of SPX Networks. For standard and smaller systems the single twisted pair C-Bus provides the simplest and most cost effective solution. For larger schemes and where more advanced SPECS3 Integration features may be required, the twin twisted pair T-Bus is recommended. Further guidance on the choice of area controller networks is available on request. Area Controllers are also available with an in-built in radio communications node which supports SPECS3 radio switch plates, remote DALI addressing and system programming.

CONTACT US
T | 01992 450126
E | SALES@SIMMTRONIC.COM
E | AFTERSALES@SIMMTRONIC.COM
W| WWW.SIMMTRONIC.COM

HQ | LONDON & SOUTH
WATERSIDE
CHARLTON MEAD LANE
HODDESDON, HERTFORDSHIRE
EN11 0QR

MIDLANDS & NORTH
BLOC
17 MARBLE STREET
MANCHESTER
M2 3AW

Overrides and Test Modes

The SPX.320 can also be wired directly to volt free "load shedding", and "alarm" signal contacts, any contact can be used to affect all SPXs on the area controller network. Two levels of load shedding are provided, both are software configurable, the alarm input generally forces all lighting to maximum. The SPX control panel provides selection and indication of two independently configured emergency test groups; as required the panel may be locked from the manual key switch. Once the system has been installed, the SPX area controllers should be powered up. As supplied the system will usually be in "Pre-Commissioned Mode", the mode allows the system to be tested to see that all equipment is installed and working properly, see the datasheet 'Overriding the Control System' for more details.

Installation

The SPX Area Controller should only be installed by in "no operation access" areas where access is only achieved by use of a tool and adjacent to the distribution board that supplies its area of lighting. If utilising the mainsbourne signalling system, the SPX should be connected a minimum of 10 metres from the Earth Neutral Bond point. The SPX must be installed in accordance with the current IEE wiring Regulations and a readily accessible disconnection device (i.e circuit breaker or fused spur) shall be incorporated in the building installation wiring. The rating of which should not exceed 6Amps.

The SPX should be mounted at or below shoulder height to allow access to the control panel. Also ensure there is not any conduit, trunking or cable within 100mm of the stub antenna. Keyhole brackets are provided along with fixing holes beneath the lower wiring cover to ensure adequate fixing. There is no need to remove the upper cover to which the control panel is fitted.

M-Bus cables* connect here. Four separate M-Bus runs are supported and should be wired as indicated on the installation drawings. The wiring polarity should be: Black -ve, Red +ve.

F-Bus cable* connector is under the lid (remove with caution)

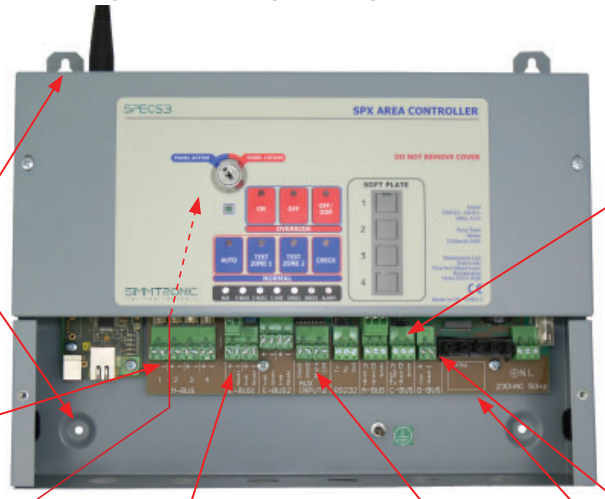

E-Bus cables* which connect to sensors and switch plates etc, will normally be connected to E-Bus 1 unless otherwise advised. For ease of wiring two connectors are provided on each E-Bus, the wiring polarity should be: Black -ve, Red +ve.

Volt Free Inputs are connected here for Load Shedding and Alarm function.

All SPXs should be networked together using either C-Bus, T-Bus or IP. Note that T-Bus is a Twin twisted pair, one pair connecting C-Bus and the other connecting A-Bus. Screen drain wires should be kept short, insulated and wired to the screen (SCRN) terminal only. Never run network cables with mains wiring.

T-Bus



C-Bus Only

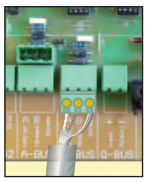

Optional O-Bus output.

Lighting control modules within an area have a 4 digit address e.g. 0124; the first two digits (01 in this case) should be the same as the SPX number shown in this box.

When connected the SPX should be powered up prior to commissioning visits, this will give a good indication that the system is operating correctly. Simple wiring faults shorts on E-Bus, M-Bus, C-Bus or T-Bus will not damage the SPX.

*If any of these bus cables are run with mains wiring then ensure the cable has the correct insulation rating. Simmtronic approved bus cables are suitable for incorporating with single phase wiring only. See Simmtronic Cable Data Sheets for more details and suitable cable types.]

General Specification

Supply:	230VAC, 50Hz
Fuse:	20mm, 250mA (T), 3A fused supply
Weight:	2.75kg
Tamb:	0 to 30ºC
Data retention:	10 Years (un-powered)
E-Bus:	FELV, 2 short circuit proof bus drives. Power Limit: 64 devices total over both buses. Max Cable Length: 200m Max
O-Bus:	128 control modules
C-Bus/T-Bus:	FELV, RS485, short circuit proof, 120 Max SPX.S. Max Cable Length: 1000m
M-Bus:	Felv, 4 short circuit proof bus drives, 32 LCMs per bus. Max Cable Length: 200m
F-Bus:	Felv, 1 short circuit proof bus drive, 20 nodes. Max Cable Length: 200m

Part No.	Description
SPX.320	Area Controller, C-Bus, T-Bus, Communications Node
SPX.321	Area Controller, C-Bus, T-Bus, Communications Node also includes F-Bus

ISSUE H

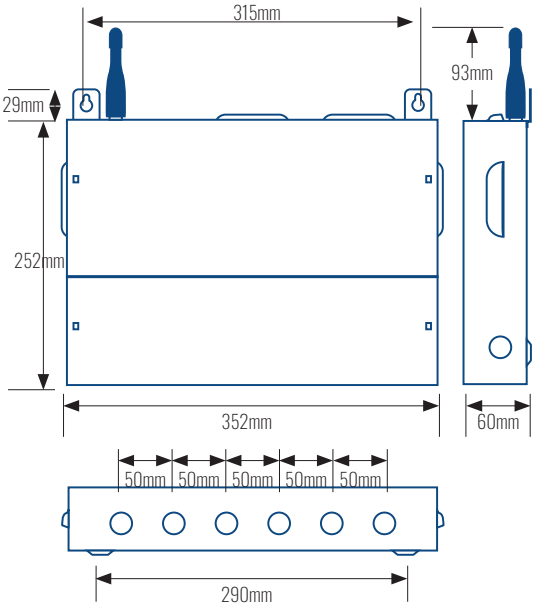

SIMMTRONIC

Appendix 7 - CCTV System Equipment Schedule

CCTV System

The site has areas for CCTV coverage these being: -

- External parking and perimeter
- MCC offices
- Biffa Offices
- Winter Maintenance Area
- Gatehouse / Site Entrance

A combination of Internal and external 2mp fixed focal dome cameras, external 4mp fixed focal bullet cameras, external 4K (8mp) fixed focal bullet cameras, 2mp external ANPR cameras and 2mp PTZ cameras have been provided for the above areas.

The system is for day/night recording to a recommended light level of 0.4 lux monochrome and
2.0 lux for colour cameras. Cameras have IR LED lighting. No additional lighting for the system has been provided.

Recording facilities will incorporate a network recording unit offering 60Tb of storage for 31days at camera resolutions and 12ips for static cameras and 25ips for PTZ cameras

ANPR cameras will be connected to the Access Control system, so to treat vehicle registrations as access credentials (Access cards)

Cabling Installation

The CCTV System will be wired in Cat5e and OM4 Fibre cables clipped to trays/enclosed in designated trunking (provided by others) and routed in natural voids or roof spaces where available.

Camera Design Specification

Type of System:	Day, Day/Night
Main Control Equipment sited:	MCC server Room
Operator Position:	Gatehouse

Camera No 1

Camera Type & Voltage:	8mp PoE
Lens Type:	4mm Fixed Focal
Min Lux Level:	Colour: 0.01 lux@(F1.2, AGC ON), 0 lux with IR
Area of Coverage:	Parking and site perimeter
Mounting Arrangement and Height of Camera:	Column and wall mounted 3.5-4m
Operational Requirements:	Detection@100m Observation@40m Identification@10m

Camera No 2

Camera Type & Voltage:	2mp Varifocal ANPR camera / License Plate Recognition
Lens Type:	2.8mm-12mm Varifocal
Min Lux Level:	Colour: 0.002 Lux @ (F1.2, AGC ON) 0 lux with IR
Area of Coverage:	Site Entry / Exit
Mounting Arrangement and Height of Camera:	Column mounted

Camera No 3

Camera Type & Voltage:	4mp PoE
Lens Type:	2.8mm Fixed Focal
Min Lux Level:	Colour: 0.008 lux@(F1.2, AGC ON), 0 lux with IR
Area of Coverage:	Building front elevation and entrances
Mounting Arrangement and Height of Camera:	Wall mounted 3.5-4m
Operational Requirements:	Detection@42m Observation@18m Identification@4.5m

Camera No 4

Camera Type & Voltage:	2mp PoE
Lens Type:	2.8mm Fixed Focal
Min Lux Level:	Colour: 0.05 lux@(F1.2, AGC ON), 0 lux with IR
Area of Coverage:	Gatehouse elevations
Mounting Arrangement and Height of Camera:	Wall mounted
Operational Requirements:	Detection@37m Observation@15m Identification@3.5m

Camera No 5

Camera Type & Voltage:	2mp PTZ Hi PoE
Lens Type:	4.8 – 153mm 32x Optical Zoom, 16x digital zoom
Min Lux Level:	Colour: 0.005 Lux @ (F1.2, AGC ON), B/W: 0.001 Lux @ (F1.2, AGC ON), 0 Lux with IR
Area of Coverage:	External areas
Mounting Arrangement and Height of Camera:	Column Mounted
Operational Requirements:	Identification@200m Inspect @ 50m (at telefocal)

Equipment Schedule

1	CCTV-DVD EVIDENCE KIT
2	4MM 8MP 4K 50M IR FIXED FOCAL BULLET CAMERA
3	2MP 7″ ACUSENSE POWERED BY DARKFIGHTER 32X ZOOM PTZ
4	60W POE MIDSPAN INJECTOR
5	2.8MM 4MP FIXED FOCAL IR BULLET CAMERA EXTERNAL
6	2.8MM 2MP FIXED FOCAL IR AUDIO DOME INTERNAL
7	2.8MM 2MP FIXED FOCAL IR AUDIO DOME EXTERNAL
8	WALL MOUNTING BRACKET FOR DOME CAMERA
9	2.8-12MM 2MP VARIFOCAL ANPR BULLET CAMERA
10	IP NET2+ ACU FOR ANPR CONNECTION TO ACCESS CONTROL SYSTEM
11	28″ ULTRA HD 4K LCD MONITOR
12	7″ TOUCHSCREEN NETWORK KEYBOARD
13	SERVER WITH 64 CHANNEL BASE LICENCE
14	INDUSTRIAL GIGABIT SMART MANAGED POE SWITCH
15	60W 24VDC ULTRA SLIM DIN RAIL PSU
16	24 PORT 100MBPS SMART MANAGED POE SWITCH
17	RACK 9U
18	24 PORT 1U PATCH PANEL
19	KVM CONSOL ULTRA SHORT DEPTH SINGLE RAIL WIDE SCREEN HD LCD CONSOLE
20	FIBRE SWITCH 4 PORT
21	RACK WALL 21U
22	6MTR TILT OVER CABINET BASE COLUMN
23	4MTR CABINET BASE COLUMN
24	12MP 32 CHANNEL 8 SATA DVD NVR

DS-2CD2T83G0-I5/I8
8 MP IR Fixed Bullet Network Camera





Key Features

- 1/2.5" Progressive Scan CMOS
- 3840 × 2160 @15 fps
- 2.8/4/6/8 mm fixed lens
- Color: 0.01 lux @(F1.2, AGC ON), 0.028 lux @(F2.0, AGC ON), 0 lux with IR
- H.265+, H.265, H.264+, H.264
- 2 Behavior analyses
- 120dB WDR
- BLC/3D DNR/ROI/HLC
- IP67
- Built-in micro SD/SDHC/SDXC card slot, up to 128 GB

Specifications

Camera	
Image Sensor	1/2.5" Progressive Scan CMOS
Min. Illumination	Color: 0.01 lux @(F1.2, AGC ON), 0.028 lux @(F2.0, AGC ON), 0 lux with IR
Shutter Speed	1/3 s to 1/100,000 s
Slow Shutter	Yes
Day & Night	IR Cut Filter
Digital Noise Reduction	3D DNR
WDR	120dB
3-Axis Adjustment	Pan: 0° to 360°, tilt: 0° to 100°, rotate: 0° to 360°
Lens	
Focal Length	2.8/4/6/8 mm
Aperture	F2.0
Focus	Fixed
FOV	2.8 mm, horizontal FOV: 102°, vertical FOV: 53°, diagonal FOV: 124° 4 mm, horizontal FOV: 79°, vertical FOV: 42°, diagonal FOV: 95° 6 mm, horizontal FOV: 50°, vertical FOV: 28°, diagonal FOV: 59° 8 mm, horizontal FOV: 40°, vertical FOV: 25°, diagonal FOV: 53°
Lens Mount	M12
IR	
IR Range	I5: up to 50 m I8: up to 80 m
Wavelength	850nm
Compression Standard	
Video Compression	Main stream: H.265/H.264 Sub-stream: H.265/H.264/MJPEG Third stream: H.265/H.264
H.264 Type	Main Profile/High Profile
H.264+	Main stream supports
H.265 Type	Main Profile
H.265+	Main stream supports
Video Bit Rate	32 Kbps to 16 Mbps
Smart Feature-set	
Smart Event	Line crossing detection, intrusion detection, face detection
Basic Event	Motion detection, video tampering alarm, exception (network disconnected, IP address conflict, illegal login, HDD full, HDD error)
Linkage Method	Trigger recording: memory card, network storage, pre-record and post-record Trigger captured pictures uploading: FTP, HTTP, NAS, Email Trigger notification: HTTP, ISAPI, Email
Region of Interest	Support 1 fixed region for main stream and sub-stream
Image	
Max. Resolution	3840 × 2160
Main Stream	50Hz: 12.5 fps (3840 × 2160), 20fps (3072 × 1728), 25 fps (2560 × 1440, 1920 × 1080, 1280 × 720) 60Hz: 15 fps (3840 × 2160), 20fps (3072 × 1728), 30 fps (2560 × 1440, 1920 × 1080, 1280 × 720)
Sub-Stream	50Hz: 25fps (640 × 480, 640 × 360, 320 × 240) 60Hz: 30fps (640 × 480, 640 × 360, 320 × 240)

Third Stream	50Hz: 25fps (1280 × 720, 640 × 360, 352 × 288) 60Hz: 30fps (1280 × 720, 640 × 360, 352 × 240)
Image Enhancement	BLC/3D DNR/HLC
Image Settings	Saturation, brightness, contrast, sharpness, AGC, and white balance adjustable by client software or web browser
Target Cropping	No
Day/Night Switch	Day/Night/Auto/Schedule
*Note: When the main stream resolution is 3840 × 2160, max frame rate is 12.5 fps (50Hz)/15 fps (60Hz) for all streams. When the main stream resolution is 3072 × 1728, max frame rate is 20 fps for all streams.	
Network	
Network Storage	Support Micro SD/SDHC/SDXC card (128G), local storage and NAS (NFS,SMB/CIFS), ANR
Protocols	TCP/IP, UDP, ICMP, HTTP, HTTPS, FTP, DHCP, DNS, DDNS, RTP, RTSP, RTCP, PPPoE, NTP, UPnP, SMTP, SNMP, IGMP, 802.1X, QoS, IPv6, UDP, Bonjour, SSL/TLS
General Function	Anti-flicker, three streams, heartbeat, mirror, privacy masks, password reset via e-mail, pixel counter, HTTP listening
Security	Password protection, complicated password, HTTPS encryption, 802.1X authentication (EAP-TLS 1.2, EAP-LEAP, EAP-MD5), watermark, IP address filter, basic and digest authentication for HTTP/HTTPS, WSSE and digest authentication for ONVIF, TLS1.2
API	ONVIF (PROFILE S, PROFILE G, PROFILE T), ISAPI, SDK
Simultaneous Live View	Up to 6 channels
User/Host	Up to 32 users 3 levels: Administrator, Operator and User
Client	iVMS-4200, Hik-Connect, Hik-Central
Web Browser	Plug-in required live view: IE8+ Plug-in free live view: Chrome 57.0+, Firefox 52.0+, Safari 11+ Local Service: Chrome 41.0+, Firefox 30.0+
Interface	
Video Output	No
Communication Interface	1 RJ45 10M/100M self-adaptive Ethernet port
On-board Storage	Built-in microSD/SDHC/SDXC slot, up to 128 GB
SVC	H.264 and H.265 encoding support
Reset Button	Yes
General	
Operating Conditions	-30 °C to +60 °C (-22 °F to +140 °F), Humidity 95% or less (non-condensing)
Web Client Language	32 languages English, Russian, Estonian, Bulgarian, Hungarian, Greek, German, Italian, Czech, Slovak, French, Polish, Dutch, Portuguese, Spanish, Romanian, Danish, Swedish, Norwegian, Finnish, Croatian, Slovenian, Serbian, Turkish, Korean, Traditional Chinese, Thai, Vietnamese, Japanese, Latvian, Lithuanian, Portuguese (Brazil)
Power Supply	12 VDC ± 25%, Φ 5.5mm coaxial power plug PoE(802.3af, class 3)
Power Consumption and Current	I5: 12 VDC, 0.7 A, max. 7.5 W PoE: (802.3af, 36 V to 57 V), 0.3 A to 0.2 A, max. 9 W I8: 12 VDC, 0.9 A, max. 11 W PoE: (802.3af, 36 V to 57 V), 0.4 A to 0.2 A, max. 12.9 W
Protection Level	IP67
Material	Metal
Dimensions	Camera: Φ 104.8 × 299.7 mm (Φ 4.1" × 11.8") Package: 386 × 156 × 155 mm (15.2" × 6.1" × 6.1")

Weight	Camera: 1200 g (2.7 lb.)

Available Model

DS-2CD2T83G0-I5(2.8/4/6/8 mm), DS-2CD2T83G0-I8(2.8/4/6/8 mm)

Dimension

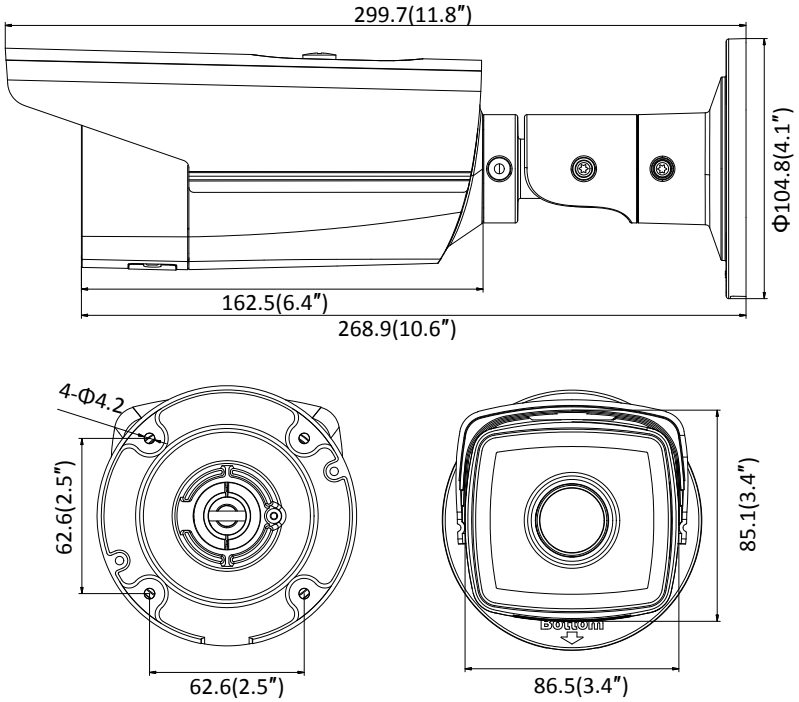

Unit: mm

Accessory



DS-1260ZJ
Junction Box

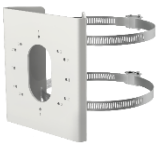

DS-1275ZJ-S-SUS
Vertical Pole Mount



DS-1276ZJ-SUS
Corner Mount

Distributed by

Headquarters
No.555 Qianmo Road, Binjiang District,
Hangzhou 310051, China
T +86-571-8807-5998
overseasbusiness@hikvision.com

Hikvision USA
T +1-909-895-0400
sales.usa@hikvision.com

Hikvision Europe
T +31-23-55-42-770
info.eu@hikvision.com

Hikvision Middle East
T +971-4-8816086
salesme@hikvision.com

Hikvision Russia
T +7-495-669-67-99
saleru@hikvision.com

Hikvision India
T +91-22-28469900
sales@pramahikvision.com

Hikvision Italy
T +39-0438-6902
info.it@hikvision.com

Hikvision France
T +33(0)1-85-330-450
info.fr@hikvision.com

Hikvision Spain
T +34-91-737-16-55
info.es@hikvision.com

Hikvision Poland
T +48-22-460-01-50
poland@hikvision.com

Hikvision UK
T +01628-902140
support.uk@hikvision.com

Hikvision Singapore
T +65-6684-4718
sg@hikvision.com

Hikvision Oceania
T +61-2-8599-4233
salesau@hikvision.com

Hikvision Canada
T +1-909-895-0400
sales.usa@hikvision.com

Hikvision Korea
T +82-31-731-8841
sales.korea@hikvision.com

Hikvision Brazil
T +55 11 3318-0050
Latam.support@hikvision.com

Hikvision Africa
T +27 (10) 0351172
sale.africa@hikvision.com

Hikvision Hong Kong
T +852-2151-1761

© Hikvision Digital Technology Co., Ltd. 2019 | Data subject to change without notice |

05060020200416

DS-2CD7A26G0/P-IZHSWG
2 MP VF Bullet Network Camera



- 1/1.8” Progressive Scan CMOS
- 1920 × 1080 @ 60fps
- Color: 0.002 Lux @ (F1.2, AGC ON)
- H.265, H.265+, H.264, H.264+
- 140dB WDR
- 3D DNR
- Alarm I/O
- IP67, IK10
- 1 RS-485 interface
- IR range up to 50 m (2.8 to 12 mm)
- IR range up to 100 m (8 to 32 mm)
- Five defined streams and up to five custom streams
- 6 behavior analyses, 2 exception detection
- License Plate Recognition
- Supports alarms for listed license plate in the blacklist and whitelist
- Built-in microSD/SDHC/SDXC card slot, up to 256 GB
- Support wiegand interface of w26 and w34, is seamlessly compatible with third party access controller.

Specifications

Camera	
Image Sensor	1/1.8" Progressive Scan CMOS
Min. Illumination	Color: 0.002 Lux @ (F1.2, AGC ON), 0 Lux with IR
Shutter Speed	1 s to 1/100,000 s
Slow Shutter	Yes
Day & Night	IR Cut Filter
Digital Noise Reduction	3D DNR
WDR	140 dB
Angle Adjustment	Bracket, pan: 0° to 355°, tilt: 0° to 90°, rotate: 0° to 360°
Lens	
Focal length	2.8 to 12 mm 8 to 32 mm
Aperture	2.8 to 12 mm: F1.2 8 to 32 mm: F1.6
Focus	Auto, semi-auto, manual
FOV	2.8 to 12 mm: horizontal FOV 103.3° to 38.6°, vertical FOV 54.2° to 21.9°, diagonal FOV 124.2° to 44.3° 8 to 32 mm: horizontal FOV 42.5° to 13.4°, vertical FOV 23.4° to 7.7°, diagonal FOV 49° to 15.3°
Lens Mount	Integrated
IR	
IR Range	2.8 to 12 mm: up to 50 m 8 to 32 mm: up to 100 m
Wavelength	850 nm
Compression Standard	
Video Compression	Main stream: H.265/H.264/H.265+/H.264+ Sub stream/third stream/fourth stream/fifth stream/custom stream: H.265/H.264/MJPEG
H.264 Type	Baseline Profile/Main Profile/High Profile
H.264+	Main stream supports
H.265 Type	Main Profile
H.265+	Main stream supports
Video Bit Rate	32 Kbps to 16 Mbps
Audio Compression	No
Audio Bit Rate	No
Smart Feature-set	
Perimeter Protection	Line crossing detection, intrusion detection, region entrance detection, region exiting detection, unattended baggage detection, object removal detection
Exception Detection	Scene change detection, defocus detection
Statistics	No
Face Detection	Yes
Recognition	License Plate Recognition
Region of Interest	4 fixed regions for main stream, sub stream, third stream, fourth stream, and fifth stream, and dynamic tracking
Road Traffic and Vehicle Detection	

Accuracy (Under recommended installation and lighting conditions)	Capture rate > 98% Vehicle moving direction recognition accuracy > 96% Mistaken capture rate < 2% (entrance/exit), < 5% (checkpoint)
Blacklist and whitelist	Max. 10,000 records
No License Plate Detection	Yes
Motorcycle LPR	Yes (only applicable to checkpoint)
Image	
Max. Resolution	1920 × 1080
Main Stream	50Hz: 50fps (1920 × 1080, 1280 × 960, 1280 × 720) 60Hz: 60fps (1920 × 1080, 1280 × 960, 1280 × 720)
Sub Stream	50Hz: 25fps (704 × 576, 640 × 480) 60Hz: 30fps (704 × 480, 640 × 480)
Third Stream	50Hz: 25fps (1920 × 1080, 1280 × 960, 1280 × 720, 704 × 576, 640 × 480) 60Hz: 30fps (1920 × 1080, 1280 × 960, 1280 × 720, 704 × 480, 640 × 480)
Fourth Stream	50Hz: 25fps (1920 × 1080, 1280 × 720, 704 × 576, 640 × 480) 60Hz: 30fps (1920 × 1080, 1280 × 720, 704 × 480, 640 × 480)
Fifth Stream	50Hz: 25fps (704 × 576, 640 × 480) 60Hz: 30fps (704 × 480, 640 × 480)
Custom Stream	50Hz: 25fps (1920 × 1080, 1280 × 720, 704 × 576, 640 × 480) 60Hz: 30fps (1920 × 1080, 1280 × 720, 704 × 480, 640 × 480)
Image Enhancement	BLC, HLC, 3D DNR, Defog, EIS, lens distortion correction
Image Setting	Rotate mode, saturation, brightness, contrast, sharpness, AGC, and white balance are adjustable by client software or web browser
Target Cropping	Yes
SVC	H.264 and H.265 encoding
Day/Night Switch	Day/Night/Auto/Schedule/Triggered by Alarm In/ Triggered by video
Picture Overlay	LOGO picture can be overlaid on video with 128 × 128 24bit bmp format
Network	
Network Storage	microSD/SDHC/SDXC card (256 GB), local storage and NAS (NFS, SMB/CIFS), ANR
Alarm Trigger	Motion detection, video tampering alarm, network disconnected, IP address conflict, illegal login, HDD full, HDD error, alarm for listed license plate in the blacklist and whitelist
Protocols	TCP/IP, ICMP, HTTP, HTTPS, FTP, DHCP, DNS, DDNS, RTP, RTSP, RTCP, PPPoE, NTP, UPnP, SMTP, SNMP, IGMP, 802.1X, QoS, IPv6, UDP, Bonjour
Security Measures	Password protection, HTTPS encryption, IEEE 802.1x port-based network access control, IP address filter, basic and digest authentication for HTTP/HTTPS, WSSE and digest authentication for ONVIF
General Function	One-key reset, anti-flicker, five streams and custom stream, heartbeat, password protection, privacy mask, watermark, IP address filter
API	ONVIF (PROFILE S, PROFILE G), ISAPI, SDK
Simultaneous Live View	Up to 20 channels
User/Host	Up to 32 users. 3 user levels: administrator, operator and user
Client	iVMS-4200, Hik-Connect, iVMS-5200, Hik-Central
Web Browser	Plug-in required live view: IE8+, Chrome31.0-44, Mozilla Firefox30.0-51, Safari8.0+ Plug-in free live view: Chrome45+, Mozilla Firefox52+
Interface	
Audio	No
Communication Interface	1 RJ45 10M/100M/1000M Ethernet port, 1 RS-485 interface (half duplex, HIKVISION, Pelco-P, Pelco-D, self-adaptive)

	1 Wiegand (w26, w34)
Alarm	2 inputs, 2 outputs (up to 24 VDC 1A or 110 VAC 500 mA)
Video Output	1Vp-p composite output (75 Ω/CVBS)
On-board storage	Built-in micro SD/SDHC/SDXC slot, up to 256 GB
BNC	CVBS analog output (4CIF resolution), internal
Reset Button	Yes
Audio	
Environment Noise Filtering	No
Audio Sampling Rate	No
General	
Firmware Version	5.6.10
Operating Conditions	-40 °C to 60 °C (-40 °F to 140 °F) Humidity 95% or less (non-condensing)
Power Supply	12 VDC ± 20%, two-core terminal block PoE (802.3at, class 4)
Power Consumption and Current	12 VDC, 1.4 A, max. 16.5 W; PoE (802.3at, 42.5 V to 57 V), 0.4 A to 0.3 A
Protection Level	IP67, IK10
Heater	yes
Material	Aluminum alloy
Dimensions	Camera: Φ140 × 351 mm (Φ5.5" × 13.8") With package: 405 × 190 × 180 mm (15.9" × 7.5" × 7.1")
Weight	Camera: approx. 2.5 kg (5.51 lb.) With package: approx. 2.75 kg (6.06 lb.)

** Listed resolutions are only selectable options. It does not mean that all streams can work at their maximum resolution at the same time.*

Available Model

DS-2CD7A26G0/P-IZHSWG (2.8-12 mm), DS-2CD7A26G0/P-IZHSWG (8-32 mm)

**-H: Heater supported*

Dimension

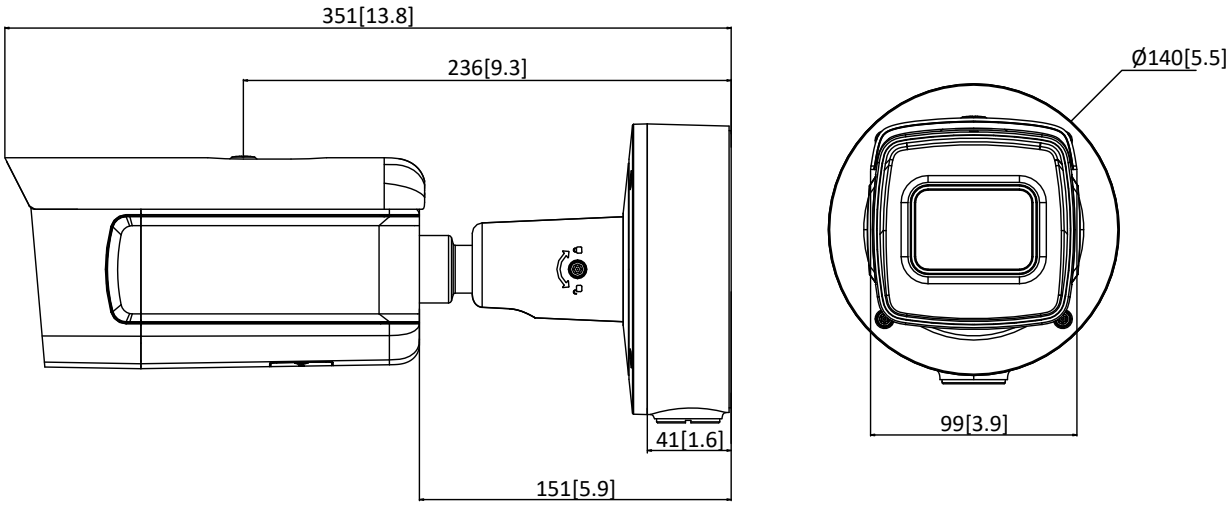

Unit: mm[inch]

Accessory



DS-1475ZJ-SUS

Vertical Pole Mount



DS-1476ZJ-SUS

Corner Mount



DS-2251ZJ

Column Mount

Distributed by

Headquarters
No.555 Qianmo Road, Binjiang District,
Hangzhou 310051, China
T +86-571-8807-5998
overseasbusiness@hikvision.com

Hikvision USA
T +1-909-895-0400
sales.usa@hikvision.com

Hikvision Europe
T +31-23-55-42-770
info.eu@hikvision.com

Hikvision Middle East
T +971-4-8816086
salesme@hikvision.com

Hikvision Russia
T +7-495-669-67-99
saleru@hikvision.com

Hikvision India
T +91-22-28469900
sales@pramahikvision.com

Hikvision Italy
T +39-0438-6902
info.it@hikvision.com

Hikvision France
T +33(0)1-85-330-450
info.fr@hikvision.com

Hikvision Spain
T +34-91-737-16-55
info.es@hikvision.com

Hikvision Poland
T +48-22-460-01-50
poland@hikvision.com

Hikvision UK
T +01628-902140
support.uk@hikvision.com

Hikvision Singapore
T +65-6684-4718
sg@hikvision.com

Hikvision Oceania
T +61-2-8599-4233
salesau@hikvision.com

Hikvision Canada
T +1-909-895-0400
sales.usa@hikvision.com

Hikvision Korea
T +82-31-731-8841
sales.korea@hikvision.com

Hikvision Brazil
T +55 11 3318-0050
Latam.support@hikvision.com

Hikvision Africa
T +27 (10) 0351172
sale.africa@hikvision.com

Hikvision Hong Kong
T +852-2151-1761

© Hikvision Digital Technology Co., Ltd. 2016 | Data subject to change without notice | 05056020190509

DS-2CD2045FWD-I
4 MP IR Fixed Bullet Network Camera



HD HD SD 3D DNR WDR H.265 IP67

Key Features

- 1/2.5" Progressive Scan CMOS
- 2688 × 1520 @30 fps
- 2.8, 4, 6, 8, 12 mm fixed lens
- H.265+, H.265, H.264+, H.264
- 4 Behavior analyses
- 120dB WDR
- Powered by Darkfighter
- IR range: up to 30 m
- BLC/3D DNR/ROI/HLC
- IP67
- Built-in microSD/SDHC/SDXC card slot, up to 128 GB
- Color: 0.008 lux @(F1.2, AGC ON), 0.014 lux @(F1.6, AGC ON), 0 lux with IR

Specification

Camera	
Image Sensor	1/2.5" Progressive Scan CMOS
Min. Illumination	Color: 0.008 lux @(F1.2, AGC ON), 0.014 lux @(F1.6, AGC ON), 0 lux with IR
Shutter Speed	1/3 s to 1/100,000 s
Slow Shutter	Yes
Day & Night	IR Cut Filter
Digital Noise Reduction	3D DNR
WDR	120dB
3-Axis Adjustment	Pan: 0° to 360°, tilt: 0° to 90°, rotate: 0° to 360°
Lens	
Focal Length	2.8, 4, 6, 8, 12 mm
Aperture	F1.6
Focus	Fixed
FOV	2.8 mm, horizontal FOV: 109°, vertical FOV: 60°, diagonal FOV: 131° 4 mm, horizontal FOV: 88°, vertical FOV: 46°, diagonal FOV: 105° 6 mm, horizontal FOV: 53°, vertical FOV: 30°, diagonal FOV: 61° 8 mm, horizontal FOV: 41°, vertical FOV: 23°, diagonal FOV: 48° 12 mm, horizontal FOV: 25°, vertical FOV: 14°, diagonal FOV: 29°
Lens Mount	M12
IR	
IR Range	Up to 30 m
Wavelength	850nm
Compression Standard	
Video Compression	Main stream: H.265/H.264 Sub-stream: H.265/H.264/MJPEG Third stream: H.265/H.264
H.264 Type	Main Profile/High Profile
H.264+	Main stream supports
H.265 Type	Main Profile
H.265+	Main stream supports
Video Bit Rate	32 Kbps to 16 Mbps
Smart Feature-set	
Smart Event	Line crossing detection, intrusion detection, unattended baggage detection, object removal detection, face detection, scene change detection
Basic Event	Motion detection, video tampering alarm, exception (network disconnected, IP address conflict, illegal login, HDD full, HDD error)
Linkage Method	Trigger recording: memory card, network storage, pre-record and post-record Trigger captured pictures uploading: FTP, HTTP, NAS, Email Trigger notification: HTTP, ISAPI, Email
Region of Interest	Support 1 fixed region for main stream and sub-stream
Image	
Max. Resolution	2688 × 1520
Main Stream	50Hz: 25 fps (2688 × 1520, 2304 × 1296, 1920 × 1080, 1280 × 720) 60Hz: 30 fps (2688 × 1520, 2304 × 1296, 1920 × 1080, 1280 × 720)
Sub-Stream	50Hz: 25 fps (640 × 480, 640 × 360, 320 × 240)

	60Hz: 30 fps (640 × 480, 640 × 360, 320 × 240)
Third Stream	50Hz: 25 fps (1280 × 720, 640 × 360, 352 × 288) 60Hz: 30 fps (1280 × 720, 640 × 360, 352 × 240)
Image Enhancement	BLC/3D DNR/HLC
Image Setting	Rotate mode, saturation, brightness, contrast, sharpness, AGC, and white balance adjustable by client software or web browser
Target Cropping	No
SVC	H.264 and H.265 encoding support
Day/Night Switch	Day/Night/Auto/Schedule
Network	
Network Storage	Support microSD/SDHC/SDXC card (128G), local storage and NAS (NFS, SMB/CIFS), ANR
Protocols	TCP/IP, UDP, ICMP, HTTP, HTTPS, FTP, DHCP, DNS, DDNS, RTP, RTSP, RTCP, PPPoE, NTP, UPnP, SMTP, SNMP, IGMP, 802.1X, QoS, IPv6, UDP, Bonjour, SSL/TLS
General Function	Anti-flicker, three streams, heartbeat, mirror, privacy masks, password reset via e-mail, pixel counter, HTTP listening
API	ONVIF (PROFILE S, PROFILE G, PROFILE T), ISAPI, SDK
Security	Password protection, complicated password, HTTPS encryption, 802.1X authentication (EAP-TLS 1.2, EAP-LEAP, EAP-MD5), watermark, IP address filter, basic and digest authentication for HTTP/HTTPS, WSSE and digest authentication for ONVIF, TLS1.2
Simultaneous Live View	Up to 6 channels
User/Host	Up to 32 users 3 levels: Administrator, Operator and User
Client	iVMS-4200, Hik-Connect, Hik-Central
Web Browser	Plug-in required live view: IE8+ Plug-in free live view: Chrome 57.0+, Firefox 52.0+, Safari 11+ Local Service: Chrome 41.0+, Firefox 30.0+
Interface	
Video Output	No
Communication Interface	1 RJ45 10M/100M self-adaptive Ethernet port
On-board storage	Built-in microSD/SDHC/SDXC slot, up to 128 GB
Reset Button	Yes
General	
Operating Conditions	-30 °C to +60 °C (-22 °F to +140 °F), humidity 95% or less (non-condensing)
Web Client Language	32 languages English, Russian, Estonian, Bulgarian, Hungarian, Greek, German, Italian, Czech, Slovak, French, Polish, Dutch, Portuguese, Spanish, Romanian, Danish, Swedish, Norwegian, Finnish, Croatian, Slovenian, Serbian, Turkish, Korean, Traditional Chinese, Thai, Vietnamese, Japanese, Latvian, Lithuanian, Portuguese (Brazil)
Power Supply	12 VDC ± 25%, Φ 5.5 mm coaxial plug power PoE(802.3af, class 3)
Power Consumption and Current	12 VDC, 0.5 A, max. 5.5 W PoE (802.3af, 36V to 57V), 0.2 A to 0.1 A, max. 7 W
Protection Level	IP67
Material	Metal
Dimensions	Camera: Φ70 × 155 mm (Φ2.8" × 6.1") Package: 216 × 121 × 118 mm (8.5" × 4.8" × 4.7")
Weight	Camera: 410 g (0.9 lb.)

Available Model

DS-2CD2045FWD-I (2.8/4/6/8/12 mm)

Dimension

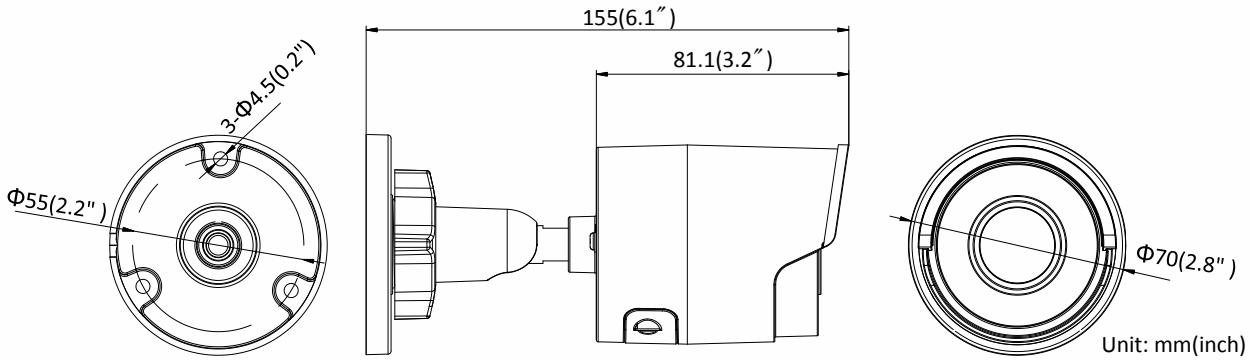

Accessory



DS-1280ZJ-XS

Junction Box



DS-1280ZJ-XS(Black)

Junction Box

Distributed by

Headquarters
No.555 Qianmo Road, Binjiang District,
Hangzhou 310051, China
T +86-571-8807-5998
overseasbusiness@hikvision.com

Hikvision USA
T +1-909-895-0400
sales.usa@hikvision.com

Hikvision Europe
T +31-23-55-42-770
info.eu@hikvision.com

Hikvision Middle East
T +971-4-8816086
salesme@hikvision.com

Hikvision Russia
T +7-495-669-67-99
saleru@hikvision.com

Hikvision India
T +91-22-28469900
sales@pramahikvision.com

Hikvision Italy
T +39-0438-6902
info.it@hikvision.com

Hikvision France
T +33(0)1-85-330-450
info.fr@hikvision.com

Hikvision Spain
T +34-91-737-16-55
info.es@hikvision.com

Hikvision Poland
T +48-22-460-01-50
poland@hikvision.com

Hikvision UK
T +01628-902140
support.uk@hikvision.com

Hikvision Singapore
T +65-6684-4718
sg@hikvision.com

Hikvision Oceania
T +61-2-8599-4233
salesau@hikvision.com

Hikvision Canada
T +1-909-895-0400
sales.usa@hikvision.com

Hikvision Korea
T +82-31-731-8841
sales.korea@hikvision.com

Hikvision Brazil
T +55 11 3318-0050
Latam.support@hikvision.com

Hikvision Africa
T +27 (10) 0351172
sale.africa@hikvision.com

Hikvision Hong Kong
T +852-2151-1761

© Hikvision Digital Technology Co., Ltd. 2019 | Data subject to change without notice |

05060020200413

DS-2CD2125FWD-I(S)
2 MP IR Fixed Dome Network Camera





Key Features

- Up to 2.0 megapixel high resolution
- Max. 1920 × 1080 @30fps
- 2.8 mm/4 mm/6 mm/8 mm/12 mm fixed lens, optional
- Powered by Darkfighter
- H.265, H.265+, H.264+, H.264
- 120dB Wide Dynamic Range
- 3D Digital Noise Reduction
- 12 VDC & PoE (802.3af)
- IR range: up to 30 m
- Support on-board storage, up to 128 GB
- Audio I/O, Alarm I/O, optional
- IP67, IK10
- 3-axis adjustment
- Color: 0.005 Lux @ (F1.2, AGC ON), 0 Lux with IR

  Color: 0.009 Lux @ (F1.6, AGC ON), 0 Lux with IR

Specification

Camera	
Image Sensor	1/2.8" Progressive Scan CMOS
Min. Illumination	Color: 0.005 Lux @ (F1.2, AGC ON), 0 Lux with IR Color: 0.009 Lux @ (F1.6, AGC ON), 0 Lux with IR
Shutter Speed	1/3 s to 1/100,000 s
Slow Shutter	Yes
Focal length	2.8/4/6/8/12 mm
Focus	Fixed
Lens	2.8 mm, horizontal field of view: 108° 4 mm, horizontal field of view: 86.4° 6 mm, horizontal field of view: 52° 8 mm, horizontal field of view: 41° 12 mm, horizontal field of view: 25°
Lens Mount	M12
Iris	F1.6
Day &Night	IR cut filter
DNR	3D DNR
Wide Dynamic Range	120dB
3-Axis Adjustment	Pan: 0° to 355° , tilt: 0° to 75°, rotate: 0° to 355°
Compression Standard	
Video Compression	Main stream: H.265/H.264 Sub-stream: H.265/H.264/MJPEG Third stream: H.265/H.264
H.264 Type	Main Profile/High Profile
H.264+	Main stream supports
H.265 Type	Main Profile
H.265+	Main stream supports
Video Bit Rate	32 Kbps to 16 Mbps
Audio Compression (-S)	G.711/G.722.1/G.726/MP2L2/PCM/MP3
Audio Bit Rate (-S)	64Kbps(G.711)/16Kbps(G.722.1)/16Kbps(G.726)/32-192Kbps(MP2L2)/8Kbps-320Kbps(MP3)
Image	
Max. Resolution	1920 × 1080
Main Stream	50Hz: 25fps (1920 × 1080, 1280 × 960, 1280×720) 60Hz: 30fps (1920 × 1080, 1280 × 960, 1280×720)
Sub-Stream	50Hz: 25fps (640 × 480, 640 × 360, 320 × 240) 60Hz: 30fps (640 × 480, 640 × 360, 320 × 240)
Third Stream	50Hz: 25fps (1920 × 1080, 1280×720, 640 × 360, 352 × 288) 60Hz: 30fps (1920 × 1080, 1280×720, 640 × 360, 352 × 240)
Image Enhancement	BLC/3D DNR/HLC
Image Setting	Rotate mode, saturation, brightness, contrast, sharpness, AGC, and white balance adjustable by client software or web browser
ROI (Region of Interest)	Support 1 fixed region for main stream and sub-stream separately
Day/Night Switch	Day/Night/Auto/Schedule/Triggered by Alarm In(-S)
Audio (-S)	

Environment Noise Filtering	Yes
Audio I/O	Yes, mono soundtrack
Sampling Rate	8kHz/16kHz/32kHz/44.1kHZ/48kHz
Network	
Network Storage	Support microSD/SDHC/SDXC card (128G) local storage, NAS (NFS,SMB/CIFS), ANR
Protocols	TCP/IP, UDP, ICMP, HTTP, HTTPS, FTP, DHCP, DNS, DDNS, RTP, RTSP, RTCP, PPPoE, NTP, UPnP, SMTP, SNMP, IGMP, 802.1X, QoS, IPv6, UDP, Bonjour, SSL/TLS
General Function	Anti-flicker, three streams, heartbeat, mirror, privacy masks, password reset via e-mail, pixel counter, HTTP listening
API	ONVIF (PROFILE S, PROFILE G, PROFILE T), ISAPI, SDK
Security	Password protection, complicated password, HTTPS encryption, 802.1X authentication (EAP-TLS 1.2, EAP-LEAP, EAP-MD5), watermark, IP address filter, basic and digest authentication for HTTP/HTTPS, WSSE and digest authentication for ONVIF, TLS1.2
Simultaneous Live View	Up to 6 channels
User/Host	Up to 32 users 3 levels: Administrator, Operator and User
Client	iVMS-4200, Hik-Connect, Hik-Central
Web Browser	Plug-in required live view: IE8+ Plug-in free live view: Chrome 57.0+, Firefox 52.0+, Safari 11+ Local Service: Chrome 41.0+, Firefox 30.0+
Interface	
Communication Interface	1 RJ45 10M/100M self-adaptive Ethernet port
Audio (-S)	1 audio input (line in), 1 audio output interface, terminal block
Alarm (-S)	1 alarm input, 1 alarm output (max. 12 VDC, 30 mA), terminal block
On-board Storage	Built-in microSD/SDHC/SDXC slot, up to 128 GB
Reset Button	Yes
Smart Feature-set	
Smart Event	Line crossing detection, intrusion detection, unattended baggage detection, object removal detection, face detection, scene change detection
Basic Event	Motion detection, video tampering alarm, exception (network disconnected, IP address conflict, illegal login, HDD full, HDD error)
Linkage Method	Trigger recording: memory card, network storage, pre-record and post-record Trigger captured pictures uploading: FTP, HTTP, NAS, Email Trigger notification: HTTP, ISAPI, alarm output (-S), Email
General	
Operating Conditions	-30 °C to +60 °C (-22 °F to +140 °F), Humidity 95% or less (non-condensing)
Web Client Language	32 languages English, Russian, Estonian, Bulgarian, Hungarian, Greek, German, Italian, Czech, Slovak, French, Polish, Dutch, Portuguese, Spanish, Romanian, Danish, Swedish, Norwegian, Finnish, Croatian, Slovenian, Serbian, Turkish, Korean, Traditional Chinese, Thai, Vietnamese, Japanese, Latvian, Lithuanian, Portuguese (Brazil)
Power Supply	12 VDC ± 25%, 5 W PoE (802.3af, 36 V to 57 V, class 3), 6.5 W
IR Range	Up to 30 m
Protection Level	IP67, IK10
Material	Camera body: metal, bubble: plastic
Dimensions	Camera: Φ 111 × 82.4 mm (Φ 4.4" × 3.2") Package: 134 × 134 × 108 mm (5.27" × 5.27" × 4.25")

Weight	Camera: 500 g (1.1 lb.)

Available Model

DS-2CD2125FWD-I (2.8/4/6/8/12 mm), DS-2CD2125FWD-IS (2.8/4/6/8/12 mm)

Dimension

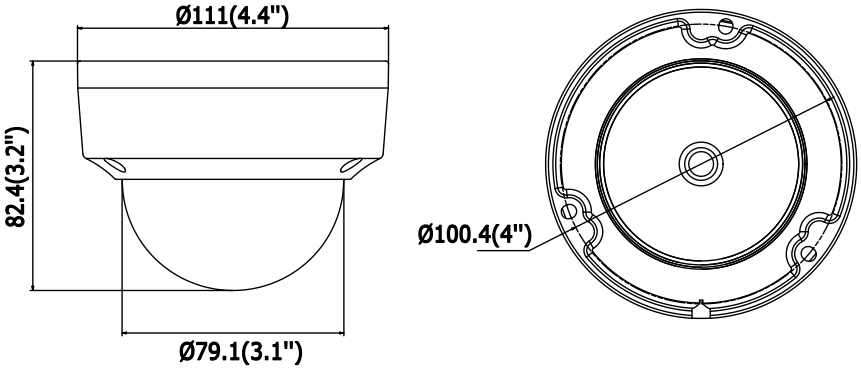

Unit: mm

Accessory



Inclined Ceiling Mount
DS-1259ZJ



Wall Mount
DS-1272ZJ-110



Wall Mount + Junction Box
DS-1272ZJ-110B



Pendant Mount
DS-1271ZJ-110



Junction Box
DS-1280ZJ-DM18



Corner Mount
DS-1276ZJ-SUS



Vertical Pole Mount
DS-1275ZJ-SUS



Rain-proof Cap
DS-1250ZJ



Wall Mount

DS-1258ZJ



Inclined Ceiling Mount

DS-1259ZJ(Black)



Pendant Mount

DS-1271ZJ-110(Black)



Wall Mount

DS-1272ZJ-110(Black)



Corner Mount

DS-1276ZJ-SUS(Black)



Junction Box

DS-1280ZJ-DM18(Black)



Wall Mount

DS-1258ZJ(Black)



Vertical Pole Mount

DS-1275ZJ-SUS(Black)

Distributed by

Headquarters
No.555 Qianmo Road, Binjiang District,
Hangzhou 310051, China
T +86-571-8807-5998
overseasbusiness@hikvision.com

Hikvision USA
T +1-909-895-0400
sales.usa@hikvision.com

Hikvision Europe
T +31-23-55-42-770
info.eu@hikvision.com

Hikvision Middle East
T +971-4-8816086
salesme@hikvision.com

Hikvision Russia
T +7-495-669-67-99
saleru@hikvision.com

Hikvision India
T +91-22-28469900
sales@pramahikvision.com

Hikvision Italy
T +39-0438-6902
info.it@hikvision.com

Hikvision France
T +33(0)1-85-330-450
info.fr@hikvision.com

Hikvision Spain
T +34-91-737-16-55
info.es@hikvision.com

Hikvision Poland
T +48-22-460-01-50
poland@hikvision.com

Hikvision UK
T +01628-902140
support.uk@hikvision.com

Hikvision Singapore
T +65-6684-4718
sg@hikvision.com

Hikvision Oceania
T +61-2-8599-4233
salesau@hikvision.com

Hikvision Canada
T +1-909-895-0400
sales.usa@hikvision.com

Hikvision Korea
T +82-31-731-8841
sales.korea@hikvision.com

Hikvision Brazil
T +55 11 3318-0050
Latam.support@hikvision.com

Hikvision Africa
T +27 (10) 0351172
sale.africa@hikvision.com

Hikvision Hong Kong
T +852-2151-1761

© Hikvision Digital Technology Co., Ltd. 2019 | Data subject to change without notice |

05060020200413

DS-2DE7232IW-AE (S5)
2 MP 32 × IR Network Speed Dome



MASK H.264 TRUE WDR H.265 ROI Ultra Low Light Scheduled Task PoE

Hikvision DS-2DE7232IW-AE (S5) 2 MP 32 × IR Network Speed Dome adopts 1/2.8" progressive scan CMOS chip. With the 32 × optical zoom lens, the camera offers more details over expansive areas.
This series of cameras can be widely used for wide ranges of high-definition, such as the rivers, roads, railways, airports, squares, parks, scenic spots, and venues, etc.

- Accurate human and vehicle target classification, alarm, and linked tracking based on deep learning algorithm
- Support face capture. Up to 5 faces captured at the same time
- 1/2.8" Progressive Scan CMOS
- Up to 1920 × 1080 @30fps resolution
- Excellent low-light performance with powered-by-DarkFighter technology
- 32 × optical zoom, 16 × digital zoom
- WDR, HLC, BLC, 3D DNR, Defog, Regional Exposure, Regional Focus, Rapid Focus
- Up to 200 m IR distance
- 24 VAC & Hi-PoE
- Support H.265+/H.265 video compression

▪ Specification

Camera Module	
Image Sensor	1/2.8" progressive scan CMOS
Min. Illumination	Color: 0.005 Lux @ (F1.2, AGC ON), B/W: 0.001 Lux @ (F1.2, AGC ON), 0 Lux with IR
Shutter Speed	1/1 s to 1/30000 s
Slow Shutter	yes
Focus	semi-auto, manual, auto
Day & Night	ICR
Day/Night Switch	day, night, auto, scheduled-switch
BLC	yes
WDR	120 dB WDR
HLC	yes
3D DNR	yes
Defog	yes
EIS	yes
Regional Exposure	yes
Regional Focus	yes
Image Settings	saturation, brightness, contrast, sharpness
White Balance	auto, ATW, sodium lamp, fluorescent lamp, indoor, outdoor, MWB, Locked WB
Digital Zoom	16 ×
Optical Zoom	32 ×
Privacy Mask	up to 24 masks, polygon region, mosaic mask, mask color configurable
SNR	> 52 dB
Lens	
Focal Length	4.8 mm to 153 mm, 32 × Optical
Zoom Speed	approx. 4.2 s
FOV	Horizontal field of view: 58.4° to 2.14° (wide-tele), Vertical field of view: 33.8° to 1.2° (wide-tele), Diagonal field of view: 65.6° to 2.46° (wide-tele)
Aperture	F1.2
PTZ	
Movement Range (Pan)	360°
Movement Range (Tilt)	-15° to 90° (auto flip)
Pan Speed	pan speed: configurable from 0.1° to 160°/s; preset speed: 240°/s
Tilt Speed	tilt speed: configurable from 0.1° to 120°/s, preset speed 200°/s
Proportional Zoom	yes
Presets	300
Patrol Scan	8 patrols, up to 32 presets for each patrol
Pattern Scan	4 pattern scans
Power-off Memory	yes
Park Action	preset, pattern scan, patrol scan, auto scan, tilt scan, random scan, frame scan, panorama scan
3D Positioning	yes
PTZ Status Display	yes
Preset Freezing	yes
Scheduled Task	preset, pattern scan, patrol scan, auto scan, tilt scan, random scan, frame scan, panorama scan, dome reboot, dome adjust, aux output
Video	
Max. Resolution	1920 × 1080
Stream Type	main stream, sub-stream, third stream
Main Stream	50Hz: 25fps (1920 × 1080, 1280 × 960, 1280 × 720); 60Hz: 30fps (1920 × 1080, 1280 × 960, 1280 × 720)
Sub-Stream	50Hz: 25fps (704 × 576, 640 × 480, 352 × 288); 60Hz: 30fps (704 × 480, 640 × 480, 352 × 240)
Third Stream	50Hz: 25fps (1920 × 1080, 1280 × 960, 1280 × 720, 704 × 576, 640 × 480, 352 × 288); 60Hz: 30fps (1920 × 1080, 1280 × 960, 1280 × 720, 704 × 480, 640 × 480, 352 × 240)
Video Compression	H.265, H.264, MJPEG
Video Bit Rate	32 kbps to 16384 kbps
H.264 Type	baseline profile, main profile, high profile

H.265 Type	main profile
H.264+	yes
H.265+	yes
SVC	yes
ROI	dynamic face tracking, fixed region, main stream, sub-stream and third stream respectively support eight fixed areas
Audio	
Audio Compression	G.711alaw, G.711ulaw, G.722.1, G.726, MP2L2, PCM
Audio Bit rate	MP2L2: 32 kbps, 40 kbps, 48 kbps, 56 kbps, 64 kbps, 80 kbps, 96 kbps, 112 kbps, 128 kbps, 144 kbps, 160 kbps, 192 kbps
Audio Sampling Rate	MP2L2: 16 kHz, 32 kHz, 48 kHz, PCM: 8 kHz, 16 kHz, 32 kHz, 48 kHz
Environment Noise Filtering	yes
Smart Features	
Face Capture	yes
Basic Event	audio exception, motion detection, alarm input, alarm output, video tampering alarm, exception
Smart Event	intrusion detection, line crossing detection, region entrance detection, region exiting detection, unattended baggage detection, object removal detection
Smart Tracking	manual tracking, event tracking, auto-tracking
Smart Record	ANR, Dual-VCA
Alarm Linkage	preset, patrol scan, pattern scan, memory card video recording, alarm output, sending email, notify surveillance center, upload to FTP,smart tracking
Network	
Network Storage	NAS (NFS, SMB/ CIFS), ANR
Protocols	IPv4/IPv6, HTTP, HTTPS, 802.1x, Qos, FTP, SMTP, UPnP, SNMP, DNS, DDNS, NTP, RTSP, RTCP, RTP, TCP/IP, UDP, IGMP, ICMP, DHCP, PPPoE, Bonjour
API	ISAPI, Hikvision SDK, Hik-Connect, ONVIF (Profile S, Profile G, Profile T), ISUP
Simultaneous Live View	20
User/Host	32
Smooth Streaming	yes
Security Measures	Authenticated username and password, MAC address binding, HTTPS encryption, 802.1X authenticated access, IP address filter
Client	iVMS-4200, Hik-Connect
Web Browser	IE 8 to 11, Chrome 57+, Firefox 52+, Safari 12+
Interface	
Communication Interface	RJ45, self-adaptive 10M/100M Ethernet port
On-board Storage	support microSD/microSDHC/microSDXC cards, up to 256 GB
Alarm Input	2 alarm inputs
Alarm Output	1 alarm output
Audio Input	1 audio input
Audio Output	1 audio output, line level, impedance: 600 Ω
Supplement Light	
IR Distance	200 m
General	
Power	24 VAC, Hi-PoE
Power Consumption and Current	Max. 42 W, including max. 10 W for heater and max. 18 W for supplement light
Operating Conditions	-30°C to 65°C (-22°F to 149°F); humidity lower than 90%RH
Reset	yes
Demist	Demist by heating the glass
Material	ADC 12, PC, PC+10%GF
Dimensions	Φ 220 mm × 353.4 mm (Φ 8.66" × 13.91")
Weight	Approx. 5 kg (11.02 lb.)
Approval	
Protection	IP66 Standard, IK10 (excluding glass window), 6000V Lightning Protection, Surge Protection and Voltage Transient Protection

▪ DORI

The DORI (detect, observe, recognize, identify) distance gives the general idea of the camera ability to distinguish persons or objects within its field of view. It is calculated based on the camera sensor specification and the criteria given by EN 62676-4: 2015.

DORI	Detect	Observe	Recognize	Identify
Definition	25 px/m	63 px/m	125 px/m	250 px/m
Distance (Tele)	2046.9 m (6715.6 ft)	812.3 m (2665.0 ft)	409.4 m (1343.2 ft)	204.7 m (671.2 ft)

▪ Dimension

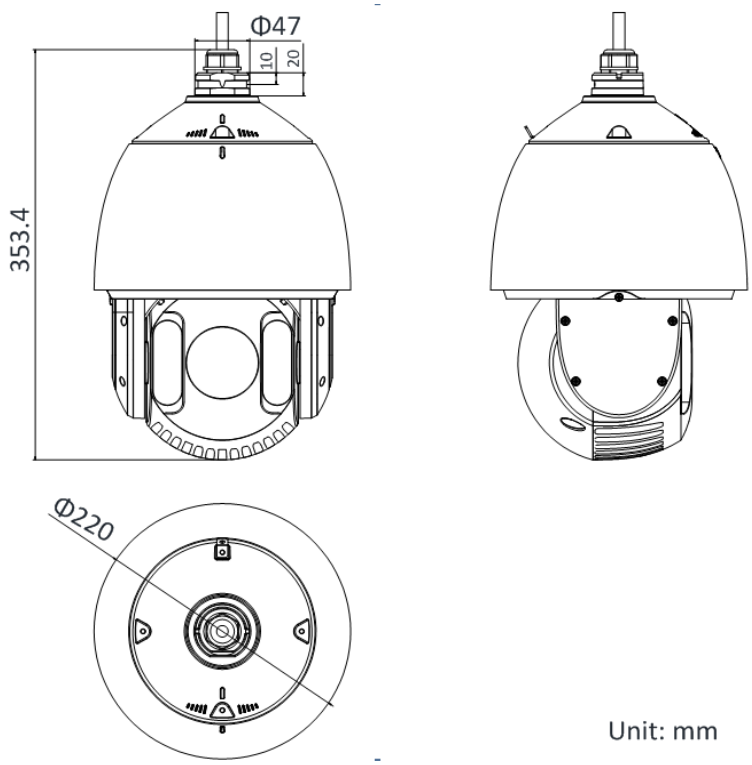

▪ Accessory

▪ Optional



DS-1604ZJ-Box-Corner
Wall Mount with Junction Box



DS-1602ZJ
Wall Mount



DS-1604ZJ-Box
Wall Mount with Junction Box



DS-1604ZJ
Wall Mount



DS-1682ZJ
Extendable Pole for Pendant Mount



DS-1604ZJ-pole
Vertical Pole Mount



DS-1604ZJ-Box-Pole
Vertical Pole Mount with Junction Box



DS-1604ZJ-Corner
Corner Mount



DS-1661ZJ
Pendant Mount



DS-1663ZJ
Ceiling Mount



DS-1681ZJ
Installation Adapter



DS-1673ZJ
Horizontal Pole Mount



DS-1660ZJ
Parapet Wall Mount



DS-1662ZJ
Pendant Mount



DS-1667ZJ
Extendable Pole for Pendant Mount



DS-1619ZJ
Gooseneck Mount



DS-1005KI
USB Joy-stick



HKA-A24250-230(EU)
HKKD-12077(USA)
HKA-A24250-230-BS(UK)
PSE-A1525/5060(JP)
Power Adapter



LAS60-57CN-RJ45
Hi-PoE midspan



DS-1100KI
Network Keyboard

**DS-1673ZJ should be used with DS-1661ZJ or DS-1602ZJ.*

▪ Available Model

DS-2DE7232IW-AE (S5)

Distributed by

Headquarters
No.555 Qianmo Road, Binjiang District,
Hangzhou 310051, China
T +86-571-8807-5998
overseasbusiness@hikvision.com

Hikvision USA
T +1-909-895-0400
sales.usa@hikvision.com

Hikvision Australia
T +61-2-8599-4233
salesau@hikvision.com

Hikvision India
T +91-22-28469900
sales@pramahikvision.com

Hikvision Canada
T +1-866-200-6690
sales.canada@hikvision.com

Hikvision Thailand
T +662-275-9949
sales.thailand@hikvision.com

Hikvision Europe
T +31-23-5542770
sales.eu@hikvision.com

Hikvision Italy
T +39-0438-6902
info.it@hikvision.com

Hikvision Brazil
T +55 11 3318-0050
Latam.support@hikvision.com

Hikvision Turkey
T +90 (216)521 7070- 7074
sales.tr@hikvision.com

Hikvision Malaysia
T +601-7652-2413
sales.my@hikvision.com

Hikvision UK & Ireland
T +01628-902140
sales.uk@hikvision.com

Hikvision South Africa
Tel: +27 (10) 0351172
sale.africa@hikvision.com

Hikvision France
T +33(0)1-85-330-450
info.fr@hikvision.com

Hikvision Kazakhstan
T +7-727-9730667
nikia.panfilov@hikvision.ru

Hikvision Vietnam
T +84-974270888
sales.vt@hikvision.com

Hikvision UAE
T +971-4-4432090
salesme@hikvision.com

Hikvision Singapore
T +65-6684-4718
sg@hikvision.com

Hikvision Spain
T +34-91-737-16-55
info.es@hikvision.com

Hikvision Tashkent
T +99-87-1238-9438
uzb@hikvision.ru

Hikvision Hong Kong
T +852-2151-1761
info.hk@hikvision.com

Hikvision Russia
T +7-495-669-67-99
saleru@hikvision.com

Hikvision Korea
T +82-(0)31-731-8817
sales.korea@hikvision.com

Hikvision Poland
T +48-22-460-01-50
info.pl@hikvision.com

Hikvision Indonesia
T +62-21-2933759
Sales.Indonesia@hikvision.com

Hikvision Colombia
sales.colombia@hikvision.com

© Hikvision Digital Technology Co., Ltd. 2020 | Data subject to change without notice |

05052320201110

QNO-8010R/8020R/8030R

5MP Network IR Bullet Camera



Key Features

- Max. 5Megapixel (2592 x 1944) resolution
- 2.8mm/4mm/6mm fixed lens
- 0.15Lux (Color), 0Lux (B/W, IR LED on)
- Max. 30fps@5MP (H.265 / H.264)
- H.265, H.264, MJPEG codec support, Multiple streaming
- Day & Night, WDR (120dB)
- Tampering, Motion detection, Defocus detection
- Micro SD / SDHC / SDXC memory slot (Max. 128GB)
- Hallway view, WiseStream II support
- IR Viewable length 20m/25m/30m
- IP66, IK10, PoE

Dimensions

Unit : mm (inch)

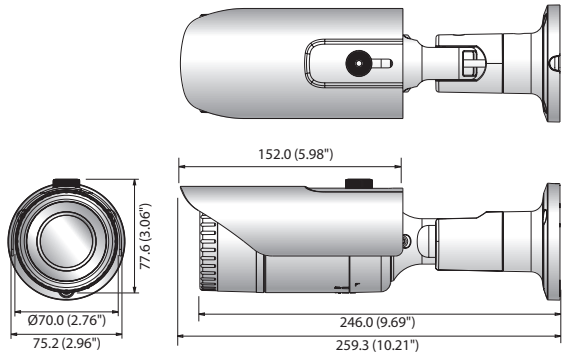

Accessories (Optional)



SBO-100B1



SBP-302PM

FC | c UL us LISTED | CE | EAC | FIRST EDITION 05-2019 © 2019 Hanwha Techwin Co., Ltd. All rights reserved.

Hanwha Techwin

	QNO-8010R	QNO-8020R	QNO-8030R
VIDEO			
Imaging Device	1/2.8" 5MP CMOS		
Effective Pixels	2592(H) x 1944(V)		
Min. Illumination	Color : 0.15Lux (F2.0, 1/30sec) BW : 0Lux (IR LED on)	Color : 0.15Lux (F1.6, 1/30sec) BW : 0Lux (IR LED on)	Color : 0.15Lux (F2.0, 1/30sec) BW : 0Lux (IR LED on)
Video Out	CVBS : 1.0 Vp-p / 75Ω composite, 720 x 480(N), 720 x 576(P) for installation		
LENS			
Focal Length (Zoom Ratio)	2.8mm fixed focal	4.0mm fixed focal	6.0mm fixed focal
Max. Aperture Ratio	F2.0	F1.6	F2.0
Angular Field of View	H : 104.7° / V : 76.5° / D : 136.0°	H : 79.8° / V : 58.1° / D : 105.9°	H : 49.4° / V : 37.4° / D : 61.0°
Focus Control	Fixed		
PAN / TILT / ROTATE			
Pan / Tilt / Rotate Range	0°~350° / 0°~67° / 0°~355°		
OPERATIONAL			
IR Viewable Length	20m(65.62ft)	25m(82.02ft)	30m(98.42ft)
Camera Title	Displayed up to 85 characters		
Day & Night	Auto (ICR)		
Backlight Compensation	BLC, WDR, SSDR		
Wide Dynamic Range	120dB		
Digital Noise Reduction	SSNR		
Motion Detection	4ea, polygonal zones		
Privacy Masking	6ea, rectangular zones		
Gain Control	Low / Middle / High		
White Balance	ATW / AWC / Manual / Indoor / Outdoor		
LDC	Support		
Electronic Shutter Speed	Minimum / Maximum / Anti flicker (1/5~1/12,000sec)		
Video Rotation	Flip, Mirror, Hallway view(90°/270°)		
Analytics	Defocus detection, Directional detection, Motion detection, Enter/Exit, Tampering, Virtual line		
Alarm I/O	Input 1ea / Output 1ea		
Alarm Triggers	Analytics, Network disconnect, Alarm input		
Alarm events	File upload via FTP and e-mail, Notification via e-mail, SD/SDHC/SDXC or NAS recording at event triggers, Alarm output		
NETWORK			
Ethernet	RJ-45(10/100BASE-T)		
Video Compression	H.265/H.264 : Main/High, MJPEG		
Resolution	2592 x 1944, 1920 x 1080, 1280 x 960, 1280 x 720, 800 x 600, 800 x 448, 720 x 576, 720 x 480, 640 x 480, 640 x 360		
Max. Framerate	H.265/H.264 : Max. 30fps/25fps (60Hz/50Hz) / MJPEG : Max. 15fps/12fps (60Hz/50Hz)		
Smart Codec	WiseStream II		
Video Quality Adjustment	H.264/H.265 : Target bitrate level control / MJPEG : Quality level control		
Bitrate Control	H.264/H.265 : CBR or VBR / MJPEG : VBR		
Streaming	Unicast (6 users) / Multicast / Multiple streaming (Up to 3 profiles)		
Protocol	IPv4, IPv6, TCP/IP, UDP/IP, RTP(UDP), RTP(TCP), RTCP, RTSP, NTP, HTTP, HTTPS, SSL/TLS, DHCP, FTP, SMTP, ICMP, IGMP, SNMPv1/v2c/v3(MIB-2), ARP, DNS, DDNS, QoS, PIM-SM, UPnP, Bonjour, LLDP		
Security	HTTPS (SSL) login authentication, Digest login authentication, IP address filtering, User access log, 802.1X authentication (EAP-TLS, EAP-LEAP)		
Edge Storage	Micro SD/SDHC/SDXC 1slot 128GB		
Application Programming Interface	ONVIF Profile S/G/T SUNAPI (HTTP API) Wisenet open platform		
Webpage Language	English, Korean, Chinese, French, Italian, Spanish, German, Japanese, Russian, Swedish,, Portuguese, Czech, Polish, Turkish, Dutch, Hungarian, Greek		

FC | c UL us LISTED | CE | EAC | FIRST EDITION 05-2019 © 2019 Hanwha Techwin Co., Ltd. All rights reserved.

Hanwha Techwin

	QNO-8010R	QNO-8020R	QNO-8030R
Web Viewer	Supported OS : Windows 7, 8.1, 10, Mac OS X 10.10, 10.11, 10.12, 10.13, 10.14 Recommended Browser : Google Chrome Supported Browser : MS Explorer11, MS Edge, Mozilla Firefox (Windows 64bit only), Apple Safari (Mac OS X only)		
Memory	512MB RAM, 256MB Flash		
ENVIRONMENTAL			
Operating Temperature / Humidity	-30°C ~ +55°C (-22°F ~ +131°F) / Less than 90% RH * Start up should be done at above -20°C		
Storage Temperature / Humidity	-30°C ~ +60°C (-22°F ~ +140°F) / Less than 90% RH		
Certification	IP66, IK10		
ELECTRICAL			
Input Voltage	PoE (IEEE802.3af, Class3)		
Power Consumption	PoE : Max 7.5W, typical 6.1W		
MECHANICAL			
Color / Material	Dark grey / Aluminum		
Product dimensions / weight	Ø70.0 x 246.0mm (Ø2.76 x 9.69"), 680g (1.499 lb)		

* The lastest product information / specification can be found at hanwha-security.com
* Design and specifications are subject to change without notice.
* Wisenet is the proprietary brand of Hanwha Techwin.

FC | cULus LISTED | CE | EAC | FIRST EDITION 05-2019 © 2019 Hanwha Techwin Co., Ltd. All rights reserved.

WISENET

ANPR CAMERAS

GROUP

Wisenet ANPR cameras come complete with our ANPR software already embedded for an effortless installation.

hanwha-security.eu

Hanwha Techwin

Automatic Number Plate Recognition - with outstanding accuracy

Our Wisenet ANPR cameras are ideal for traffic monitoring and crime prevention. Working as an independent device, the Wisenet ANPR camera provides a simple solution for entry/exit control applications.

Outstanding recognition accuracy

More than 95% recognition accuracy in any environment or conditions.

High speed vehicle detection

Guaranteed for vehicles at a maximum speed of up to 80kmph on two lanes at night-time and up to 150 kmph on a single lane during daytime.



All European countries

Reliably recognises number plates from all European countries.

Easy setup

Simple, clear and user-friendly installation.

Black and White list support

Users can define up to 2000 number plates in black and white list.

XNO-6080R/FNP

2M Network IR Bullet Camera



Specifications

- Max. 2megapixel (1920 x 1080) resolution
- 2.8 ~ 12mm (4.3x) motorized varifocal lens
- Max. 60fps@all resolutions (H.265/H.264)
- H.265, H.264, MJPEG codec supported, Multiple streaming
- Day & Night (ICR), WDR (150dB), Defog
- Loitering, Directional detection, Fog detection, Audio detection, Digital auto tracking, Sound classification, Tampering
- Motion detection, Handover
- SD/SDHC/SDXC memory slot (Max. 512GB)
- Hallway view, WiseStream II support
- IR viewable length 50m, IP67/IP66, NEMA 4X, IK10
- IR LED Viewable length: up to 12m at night for license plate capture, max speed of 80km/h
- LDC support (Lens Distortion Correction)
- PoE / 24V AC, 12V DC, Bi-directional audio support

Dimensions

Unit : mm (inch)

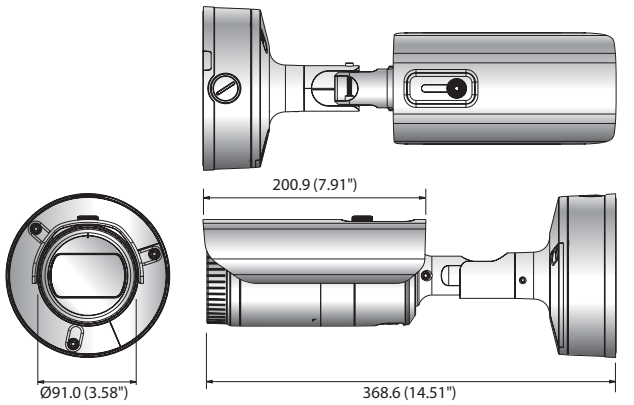

© 2020 Hanwha Techwin Co., Ltd. All rights reserved.

DESIGN AND SPECIFICATIONS ARE SUBJECT TO CHANGE WITHOUT NOTICE
Under no circumstances, this document shall be reproduced, distributed or changed, partially or wholly, without formal authorization of Hanwha Techwin Co.,Ltd.

Hanwha Techwin

QNV-6012R/6022R/6032R

2MP Network IR Dome Camera



Key Features

- Max. 2megapixel (1920 x 1080) resolution
- 0.1Lux (Color), 0Lux (B/W, IR LED on)
- 2.8mm/4mm/6mm fixed lens
- Max. 30fps@2M all resolutions (H.265/H.264)
- H.265, H.264, MJPEG codec supported, Multiple streaming
- Motion detection, Tampering, Defocus detection
- Hallway view (90˚/270˚), LDC support
- Micro SD/SDHC/SDXC memory slot (Max. 128GB)
- IR viewable length 20m/25m/30m
- IP66, IK10, PoE, 12VDC

Dimensions

Unit : mm (inch)

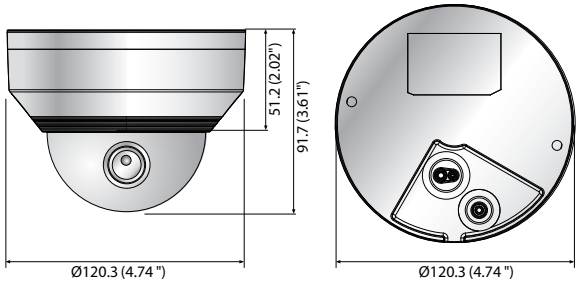

Accessories (Optional)



SBP-137WMW1 SBP-122HMW SBP-300LMW SBP-300CMW



SBP-300WMW1 SBP-300WMW

FC | c UL us LISTED | CE | EAC | FIRST EDITION 05-2019 © 2019 Hanwha Techwin Co., Ltd. All rights reserved.

Hanwha Techwin

	QNV-6012R	QNV-6022R	QNV-6032R
VIDEO			
Imaging Device	1/2.8" 2MP CMOS		
Effective Pixels	1920(H) x 1080(V)		
Min. Illumination	Color : 0.1Lux (F2.0, 1/30sec) BW : 0Lux (IR LED on)	Color : 0.1Lux (F1.6, 1/30sec) BW : 0Lux (IR LED on)	Color : 0.1Lux (F2.0, 1/30sec) BW : 0Lux (IR LED on)
Video Out	CVBS : 1.0 Vp-p / 75Ω composite, 720 x 480(N), 720 x 576(P) for installation		
LENS			
Focal Length (Zoom Ratio)	2.8mm fixed focal	4mm fixed focal	6mm fixed focal
Max. Aperture Ratio	F2.0	F1.6	F2.0
Angular Field of View	H : 113.74 V : 61.5° D : 134.45°	H : 87.6 V : 46.4° D : 104.5°	H : 52.8 V : 30.3° D : 60.4°
Focus Control	Fixed		
PAN / TILT / ROTATE			
Pan / Tilt / Rotate Range	0˚~350˚ / 0˚~67˚ / 0˚~355˚		
OPERATIONAL			
IR Viewable Length	20m (65.62ft)	25m (82.02ft)	30m (98.42ft)
Camera Title	Displayed up to 85 characters		
Day & Night	Auto (ICR)		
Backlight Compensation	BLC, WDR, SSDR		
Wide Dynamic Range	120dB		
Digital Noise Reduction	SSNR		
Motion Detection	4ea, polygonal zones		
Privacy Masking	6ea, rectangular zones		
Gain Control	Support		
White Balance	ATW / AWC / Manual / Indoor / Outdoor		
LDC	Support		
Electronic Shutter Speed	Minimum / Maximum / Anti flicker (1/5~1/12,000sec)		
Video Rotation	Flip, Mirror, Hallway view (90˚/270˚)		
Analytics	Defocus detection, Directional detection, Motion detection, Enter/Exit, Tampering, Virtual line		
Alarm I/O	Input 1ea / Output 1ea		
Alarm Triggers	Analytics, Network disconnect, Alarm input		
Alarm events	File upload via FTP and e-mail Notification via e-mail SD/SDHC/SDXC or NAS recording at event triggers Alarm output		
Audio In	Selectable (mic in/line in) Supply voltage : 2.5VDC (4mA), Input impedance : 2K Ohm		
NETWORK			
Ethernet	RJ-45 (10/100BASE-T)		
Video Compression	H.265/H.264: Main/High, MJPEG		
Resolution	1920 x 1080, 1280 x 960, 1280 x 720, 800 x 600, 800 x 448, 720 x 576, 720 x 480, 640 x 480, 640 x 360		
Max. Framerate	H.265/H.264 : Max. 30fps/25fps (60Hz/50Hz) MJPEG : Max. 15fps/12fps (60Hz/50Hz)		
Smart Codec	WiseStream II		
Video Quality Adjustment	H.264/H.265 : Target bitrate level control MJPEG : Quality Level control		
Bitrate Control	H.264/H.265 : CBR or VBR MJPEG : VBR		
Streaming	Unicast (6 users) / Multicast Multiple streaming (Up to 3 profiles)		

 © 2019 Hanwha Techwin Co., Ltd. All rights reserved.

	QNV-6012R	QNV-6022R	QNV-6032R
Audio Compression	G.711 u-law /G.726 Selectable G.726(ADPCM) 8KHz, G.711 8KHz G.726 : 16Kbps, 24Kbps, 32Kbps, 40Kbps		
Protocol	IPv4, IPv6, TCP/IP, UDP/IP, RTP(UDP), RTP(TCP), RTCP, RTSP, NTP, HTTP, HTTPS, SSL/TLS, DHCP, FTP, SMTP, ICMP, IGMP, SNMPv1/v2c/v3(MIB-2), ARP, DNS, DDNS, QoS, UPnP, Bonjour, LLDP		
Security	HTTPS (SSL) login authentication, Digest login authentication, IP address filtering, User access log, 802.1X authentication(EAP-TLS, EAP-LEAP)		
Edge Storage	Micro SD/SDHC/SDXC 1slot 128GB		
Application Programming Interface	ONVIF Profile S/G/T SUNAPI (HTTP API) Wisenet open platform		
Webpage Language	English, Korean, Chinese, French, Italian, Spanish, German, Japanese, Russian, Swedish, Portuguese, Czech, Polish, Turkish, Dutch, Hungarian, Greek		
Web Viewer	Supported OS : Windows 7, 8.1, 10, Mac OS X 10.12, 10.13, 10.14 Recommended Browser : Google Chrome Supported Browser : MS Explorer11, MS Edge, Mozilla Firefox (Windows 64bit only), Apple Safari (Mac OS X only)		
Memory	512MB RAM, 256MB Flash		
ENVIRONMENTAL			
Operating Temperature / Humidity	-30°C ~ +55°C (-22°F ~ +131°F) / Less than 90% RH * Start up should be done at above -20°C		
Storage Temperature / Humidity	-30°C ~ +60°C (-22°F ~ +140°F) / Less than 90% RH		
Certification	IP66, IK10		
ELECTRICAL			
Input Voltage	PoE (IEEE802.3af, Class3), 12VDC		
Power Consumption	PoE : Max 7.4W, typical 6W 12VDC : Max 6.4W, typical 5.1W		
MECHANICAL			
Color / Material	White / Aluminum		
RAL Code	RAL9003		
Product dimensions / weight	Ø120.3 x 91.7mm (Ø4.74 x 3.61"), 510g (1.124 lb)		

* The lastest product information / specification can be found at hanwha-security.com
* Design and specifications are subject to change without notice.
* Wisenet is the proprietary brand of Hanwha Techwin.

 © 2019 Hanwha Techwin Co., Ltd. All rights reserved.



XNP-6400R

2MP Network 40x PTZ Camera

Benefits

- 65% lighter than conventional PTZ's for easier installation and increased speed of the Pan/Tilt functionality
- **PTZ PLUS** supports a RJ45 connector only, so all you have to do is connect a single RJ45 cable for quick and easy installation
- Heat activated lens dries water
- AI based object tracking, select the object you want e.g. a car or person
- Exceptional image quality for clearer and more detailed video
- Enhanced Cybersecurity for extra peace of mind
- Allows for monitoring in complete darkness up to 200 metres with adaptive IR

XNP-6400R	
VIDEO	
Imaging Device	1/2.8" CMOS
Resolution	1920x1080, 1280x1024, 1280x960, 1280x720, 1024x768, 800x600, 800x448, 720x576, 720x480, 640x480, 640x360, 320x240
Max. Framerate	H.265/H.264: Max. 60fps/50fps(60Hz/50Hz) MJPEG: Max. 30fps/25fps(60Hz/50Hz)
Min. Illumination	Colour: 0.05Lux(F1.6, 1/30sec) BW: 0Lux(IR LED On)
LENS	
Focal Length (Zoom Ratio)	4.25~170mm(40x) zoom (digital 32x zoom)
Max. Aperture Ratio	F1.6(Wide)~F4.95(Tele)
Angular Field of View	H: 65.66˚(Wide)~1.88˚(Tele) / V: 39.40˚(Wide)~1.09˚(Tele)
Min. Object Distance	3m(9.84ft)
Focus Control	Oneshot AF, Focus save
Lens Type	DC auto iris
PAN / TILT / ROTATE	
Pan Range	360˚ Endless
Pan Speed	Max. 700˚/sec, Manual: 0.024˚/sec~250˚/sec
Tilt Range	110˚(-20˚~90˚)
Tilt Speed	Max. 500˚/sec, Manual: 0.024˚/sec~250˚/sec
Sequence	Preset(300ea), Swing, Group(6ea), Trace, Tour, Auto Run, Schedule
Preset Accuracy	Up to '±0.1˚, Pan/Tilt correction
OPERATIONAL	
Camera Title	Displayed up to 85 characters
Direction Indicator	Support
Day & Night	Auto(ICR)/Colour/BW/Schedule
Backlight Compensation	BLC, HLC, WDR, SSDR
Wide Dynamic Range	Extreme WDR(150dB)
Digital Noise Reduction	SSNRV
Digital Image Stabilization	Support(built-in gyro sensor)
Defog	Support
Motion Detection	8ea, 8point polygonal zones
Privacy Masking	32ea, rectangular Support - Colour: Grey/Green/Red/Blue/Black/White - Mosaic
Gain Control	Low / Middle / High
White Balance	ATW / AWC / Manual / Indoor / Outdoor
Electronic Shutter Speed	Minimum / Maximum / Anti flicker (2~1/12,000sec)
Video Rotation	Flip, Mirror
Analytics	Directional detection, Fog detection, Face detection, Motion detection, Appear/Disappear, Enter/Exit, Loitering, Tampering, Virtual line, Shock detection * Audio detection, Sound classification(with NW I/O Box)
Alarm Triggers	Analytics, Network disconnect * Alarm input(with NW I/O Box)
Alarm Events	File upload via FTP and e-mail Notification via e-mail SD/SDHC/SDXC or NAS recording at event triggers PTZ Preset Handover * Alarm output(with NW I/O Box)
IR Viewable Length	200m(656.17ft), Wise IR
Water Removal	Support(Spinning dry)
Auto Tracking	Object auto tracking(Person/Vehicle), Target lock tracking

© 2021 Hanwha Techwin Co., Ltd.

Hanwha Techwin

Key Features

- Max. 2MP resolution
- 4.25~170mm (40x) zoom (digital 32x zoom)
- Max. IR viewable length 200m (656.17ft), Wise IR
- Day&night (ICR), extreme WDR, DIS (Built-in gyro sensor)
- Intelligent analytics, Object auto tracking (Person/Vehicle), Target lock tracking
- H.264, H.265, MJPEG codec, WiseStreamII
- IP66, IK10, NEMA4X, NEMA-TS 2 (2.2.8, 2.2.9)
- **PTZ PLUS** Design applied (Compact, Lighter, Simple cabling)

Dimensions

Unit:mm(inch)

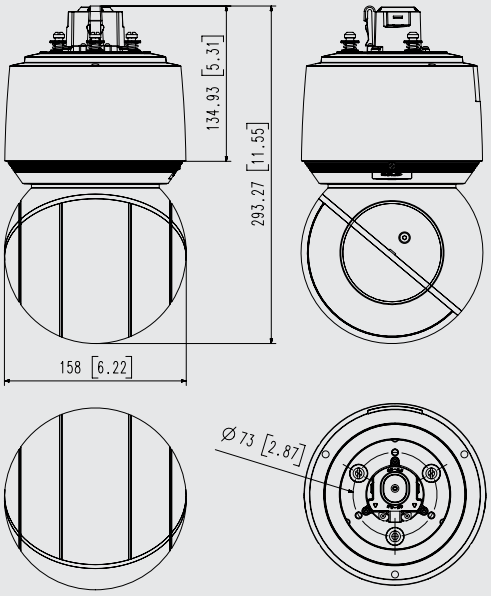

XNP-6400R	
NETWORK	
Ethernet	Metal shielded RJ-45(10/100BASE-T)
Video Compression	H.265/H.264: Main/Baseline/High, MJPEG
Smart Codec	Manual(5ea area), WiseStreamII
Bitrate Control	H.264/H.265: CBR or VBR MJPEG: VBR
Streaming	Unicast(20 users) / Multicast (128 user) Multiple streaming(Up to 10 profiles)
Protocol	IPv4, IPv6, TCP/IP, UDP/IP, RTP(UDP), RTP(TCP), RTCP,RTSP, NTP, HTTP, HTTPS, SSL/TLS, DHCP, FTP, SMTP, ICMP, IGMP, SNMPv1/v2c/v3(MIB-2), ARP, DNS, DDNS, QoS, PIM-SM, UPnP, Bonjour,LLDP, SRTP
Security	HTTPS(SSL) Login Authentication Digest Login Authentication IP Address Filtering User access log 802.1X Authentication(EAP-TLS, EAP-LEAP) Device certificate(Hanwha Techwin Root CA)
Application Programming Interface	ONVIF Profile S/G/T SUNAPI(HTTP API) Wisenet open platform
GENERAL	
Webpage Language	English, Korean, Chinese, French, Italian, Spanish, German, Japanese, Russian, Swedish, Portuguese, Czech, Polish, Turkish, Dutch, Hungarian, Greek
Edge Storage	Micro SD/SDHC/SDXC 2slot 1TB
Memory	4GB RAM, 512MB Flash
ENVIRONMENTAL & ELECTRICAL	
Operating Temperature / Humidity	-40°C~+55°C(-40°F ~ +131°F) / Less than 95% RH (Non-condensing) Maximum Temperature based on NEMA-TS 2(2.2.7) : +74°C(+165°F)
Storage Temperature / Humidity	-50°C~+60°C (-58°F~+140°F) / Less than 95% RH(Non-condensing)
Certification	IP66, IK10, NEMA4X, NEMA-TS 2(2.2.8, 2.2.9)
Input Voltage	HPoE(IEEE802.3bt, Class6, Type3, Injector included)
Power Consumption	Typical 20W, Max 40W
MECHANICAL	
Colour / Material	Body : White / Aluminum Head : Black / Polycarbontate Hard-coated dome
RAL Code	White: RAL9003 / Black: RAL9005
Product Dimensions / Weight	Ø158x293.3mm(6.22x11.55") / 3.2Kg(7.05lb)
DORI (EN62676-4 STANDARD)	
Detect (25PPM/ 8PPF)	Wide: 59.5m(195.3ft) / Tele: 2340.4m(7678.4ft)
Observe (63PPM/ 19PPF)	Wide: 23.8m(78.1ft) / Tele: 936.2m(3071.4ft)
Recognize (125PPM/ 38PPF)	Wide: 11.9m(39.1ft) / Tele: 468.1m(1535.7ft)
Identify (250PPM/ 76PPF)	Wide: 6.0m(19.5ft) / Tele: 234.0m(767.8ft)

* The latest product information / specification can be found at hanwha-security.eu
* Wisenet is the proprietary brand of Hanwha Techwin.

© 2021 Hanwha Techwin Co., Ltd.

Hanwha Techwin

XNO-9082R

4K Network IR Bullet Camera



Key Features

- 4K resolution
- 2.8~8.4mm(3x) motorized varifocal
- 0.05Lux@F1.2 (Color), 0Lux (B/W, IR LED on)
- Max.30fps@4K (H.265/H.264)
- IR viewable length 40m
- Day & Night (ICR), extreme WDR (120dB)
- DIS with built-in Gyro sensor
- Video Analytics(Defocus, Directional detection, Audio detection, Shock detection, Face/Upper body detection)
- Dual SD slots (Max. 1TB)
- PoE support
- IP66/IP67, IK10, NEMA4X
- Certified by UL CAP

Compatible Accessories (Optional)



SBP-302PM

© 2021 Hanwha Techwin Co., Ltd. All rights reserved.

Video	
Imaging Device	1/2.8"CMOS
Resolution	3840x2160, 3328x1872,3072x1728, 2592x1944, 2688x1520, 1920x1080, 1600x1200, 1280x1024, 1280x960, 1280x720, 1024x768, 800x600, 800x448, 720x576, 720x480, 640x480, 640x360, 320x240
Max. Framerate	H.265/H.264: Max. 30fps/25fps(60Hz/50Hz) MJPEG: Max. 15fps/12fps(60Hz/50Hz)
Min. Illumination	Color: 0.05Lux(F1.2, 1/30sec) B/W: 0Lux(IR LED On)
Video Out	CVBS: 1.0 Vp-p / 75Ω composite, 720x480(N), 720x576(P) for installation USB: Micro USB Type B, 1280x720 for installation
Lens	
Focal Length (Zoom Ratio)	2.8~8.4mm(3x) motorized varifocal
Max. Aperture Ratio	F1.2(Wide)~F2.8(Tele)
Angular Field of View	H: 114°(Wide)~40.2°(Tele) / V: 62.0°(Wide)~22.5°(Tele) / D: 133.0°(Wide)~46.3°(Tele)
Min. Object Distance	0.7m (2.23ft)
Focus Control	Simple focus
Lens Type	DC Auto Iris, P iris
Operational	
Camera Title	Displayed up to 85 characters
Day & Night	Auto(ICR)
Backlight Compensation	BLC, HLC, WDR, SSDR
Wide Dynamic Range	extremeWDR(120dB)
Digital Noise Reduction	SSNR V
Digital Image Stabilization	Support(built-in gyro sensor)
Defog	Support
Motion Detection	8ea, 8point Polygonal zones
Privacy Masking	32ea, polygonal zones - Color : Gray, Green, Red, Blue, Black, White - Mosaic
Gain Control	Support
White Balance	ATW / Narrow ATW / AWC / Manual / Indoor / Outdoor
LDC	Support
Electronic Shutter Speed	Minimum / Maximum / Anti flicker (1/5~1/12,000sec)
Video Rotation	Flip, Mirror, Hallway view(90°/270°)
Analytics	Defocus detection, Directional detection, Motion detection, Digital auto tracking, Appear/Disappear, Enter/Exit, Loitering, Tampering, Fog detection, Virtual line, Audio detection, Sound classification, Shock detection, Face/upper body detection
Business Intelligence	People counting, Queue management, Heatmap
Alarm I/O	2 configurable I/O ports

©2021 Hanwha Techwin Co., Ltd. All rights reserved.

Alarm Triggers	Analytics, Network disconnect, Alarm input
Alarm Events	File upload via FTP and e-mail Notification via e-mail SD/SDHC/SDXC or NAS recording at event triggers Alarm output PTZ Preset Handover Audio playback
Audio In	Selectable(mic in/line in) Supply voltage: 2.5VDC(4mA), Input impedance: 2K Ohm
Audio Out	Line out, Max.output level: 1Vrms
IR Viewable Length	40m(131.23ft)
Network	
Ethernet	Metal shielded RJ-45(10/100/1000BASE-T)
Video Compression	H.265/H.264: Main/High, MJPEG
Audio Compression	G.711 u-law /G.726 Selectable G.726(ADPCM) 8KHz, G.711 8KHz G.726: 16Kbps, 24Kbps, 32Kbps, 40Kbps AAC-LC: 48Kbps at 16KHz
Smart Codec	Manual(5ea area), WiseStream II
Bitrate Control	H.264/H.265: CBR or VBR MJPEG: VBR
Streaming	Unicast(20 users) / Multicast Multiple streaming(Up to 10 profiles)
Protocol	IPv4, IPv6, TCP/IP, UDP/IP, RTP(UDP), RTP(TCP), RTCP,RTSP, NTP, HTTP, HTTPS, SSL/TLS, DHCP, FTP, SMTP, ICMP, IGMP, SNMPv1/v2c/v3(MIB-2), ARP, DNS, DDNS, QoS, UPnP, Bonjour, LLDP, SRTP (TCP, UDP Unicast)
Security	HTTPS(SSL) Login Authentication Digest Login Authentication IP Address Filtering User access log 802.1X Authentication(EAP-TLS, EAP-LEAP) Device Certificate(Hanwha Techwin Root CA) CyberSecurity assuarance program UL CAP (UL 2900-1)
Application Programming Interface	ONVIF Profile S/G/T SUNAPI(HTTP API) Wisenet open platform
General	
Webpage Language	English, Korean, Chinese, French, Italian, Spanish, German, Japanese, Russian, Swedish,, Portuguese, Czech, Polish, Turkish, Dutch, Hungarian, Greek
Edge Storage	Micro SD/SDHC/SDXC 2slot 1TB(512GBx2)
Memory	4GB RAM, 512MB Flash
Environmental & Electrical	
Operating Temperature / Humidity	-50°C~+60°C(-58°F ~ +140°F) / Less than 95% RH(non condensing) * Start up should be done at above -30°C
Storage Temperature / Humidity	-50°C ~ +60°C(-58°F ~ +140°F) / Less than 90% RH

© 2021 Hanwha Techwin Co., Ltd. All rights reserved.

Certification	IP66/IP67, IK10, NEMA4X
Input Voltage	PoE(IEEE802.3af), 12VDC, 24VAC
Power Consumption	PoE : Max 12.,95W, typical 10.5W 12VDC : Max 12.5W, typical 9.4W 24VAC : Max 14.5W, typical 11.2W Power redundancy failover
Mechanical	
Color / Material	Dark grey / Aluminum
Product Dimensions / Weight	Ø91x368.6mm(Ø3.85"x14.51"), 2.2kg(4.85 lb)
DORI (EN62676-4 standard)	
Detect (25PPM/ 8PPF)	Wide: 49.9m(163.71ft) / Tele: 209.9m(688.65ft)
Observe (63PPM/ 19PPF)	Wide: 19.9m(65.29ft) / Tele: 83.9m(275.26ft)
Recognize (125PPM/ 38PPF)	Wide: 10.0m(32.80ft) / Tele: 42.0m(137.80ft)
Identify (250PPM/ 76PPF)	Wide: 5.0m(16.40ft) / Tele: 21.0m(68.90ft)

- The lastest product information / specification can be found at hanwha-security.com
- Design and specifications are subject to change without notice.
- Wisenet is the proprietary brand of Hanwha Techwin, formerly known as Samsung Techwin.

©2021 Hanwha Techwin Co., Ltd. All rights reserved. 03-2021

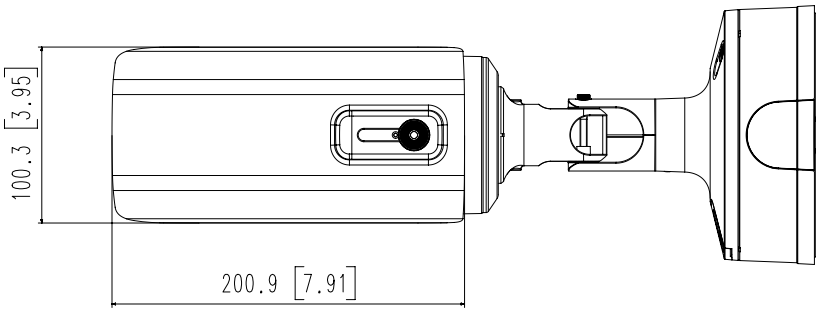

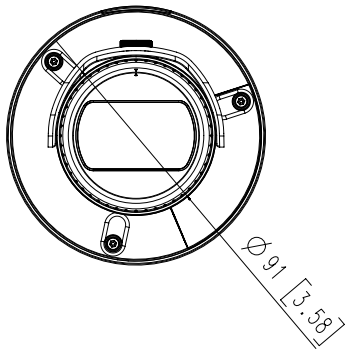

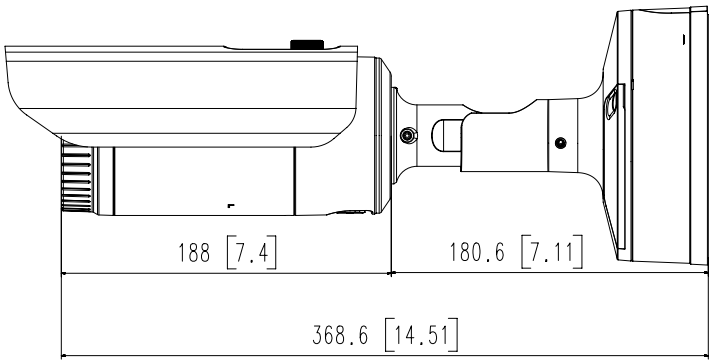

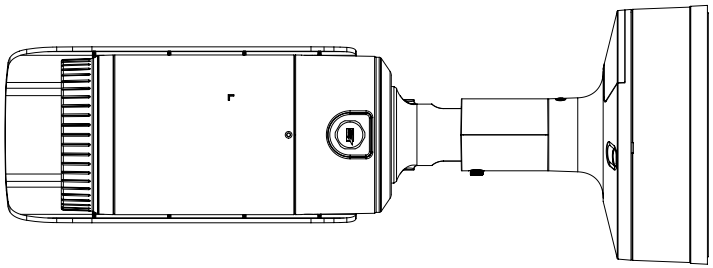

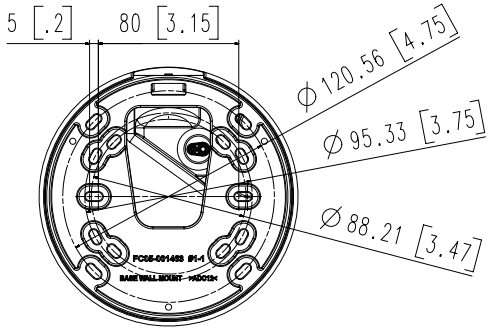

3	.	
2	XNO-9082R/8082R	'20.05.21
1	PNO-A9081R/A8081R	'19.10.14
No.	MODEL NAME	DATE
Unit:mm[inch]	SCALE:1/1	Hanwha Techwin

-Y/C:071130-

A0

© Hanwha Techwin Co.,Ltd. All rights reserved.

© 2021 Hanwha Techwin Co., Ltd. All rights reserved. 03-2021

WISENET

Appendix 8 – Fire Alarm & Aspirating System Equipment Schedule

Fire Alarm System

Open protocol Protec Algo-Tec 6500 Interactive Digital Addressable Fire Sensor ControlSystem.

The Fire Detection and Alarm System has been designed following British Standard BS 5839-1:2017, to the Category "L2

Control & Indicating Equipment

Loop Configuration

System consists of 12 detection and alarm loop circuits to distribute all field devices, include for loop circuits as per the below-indicated schedule.

Panel Location	Loop No	Proposed Coverage Area	Require 230V Supply	Charger Type
6501/NET64/P/C Gatehouse	1 (1)	Gatehouse	Yes	Integral
6501/NET64/P/C Welfare Compound	1 (2)	Grit-house & Welfare Areas	Yes	Integral
6504/NET64/P/O MCC Offices & Admin	1 (3)	MCC Offices 1 of 2	Yes	External 9800EN-18AH
	2 (4)	MCC Offices 2 of 2		
	3 (5)	MCC Bin Store		
	4 (6)	Loop Spare		
6501/NET64/O/C MCC Storage & Warehouse	1 (7)	MCC Storage & Warehouse	Yes	Integral
6501/NET64/O/C Sublet	1 (8)	Sublet & Additional Sublet	Yes	Integral
6504/NET64/P/O Biffa Offices	1 (9)	Biffa Office 1 of 2	Yes	External 9800EN-18AH
	2 (10)	Biffa Office 2 of 2		
	3 (11)	Biffa Workshop		
	4 (12)	Loop Spare		

Power Supplies

Standby battery chargers, housed in a wall-mounted purpose-built steel enclosure will be provided. Batteries will be of the low Maintenance sealed lead acid type, trickle charged via an automatic constant voltage charger unit.

These being as follows: 9800EN-18AH Dual-Path Battery Charger - 8A Charger, 18 Amp Hour Batteries

Cable / Installation

As per the specification/request, we propose to use the following cable types: -
We intend to use the following cable types: -

CIRCUITS	CABLE TYPE	COLOUR	CORES	SIZE mm^2
Secured Network	Enhanced Grade - PH120	Red	2	1.5
Detection Loop & Sounder	Enhanced Grade - PH120	Red	2	1.5
External Buildings	Steel Wired Armoured	Black	2	1.5

Interfaces

Suitable interface relays and over-ride controls are employed to ensure an appropriate response to associated building services systems following initiation of the fire alarm system.

Interfaces included as per the following schedule: -

Area/Requirement:	Interface Type:	Description:
Access Control Doors	6000/MICCO	Release Access Doors upon Fire Activation
Security Barriers	6000/MICCO	Release Upon Fire Activation
Plant	6000/MICCO	The shutdown of Various Plant
Air Sampling Signal from Intruder	6000/MICCO	Interface for Air Sampling Panel
Roller Shutter	6000/MICCO	Release Upon Fire Activation

Equipment Schedule

MCC Offices

Item	PRODUCT CODE	DESCRIPTION
1	6504/NET64/P/O	4 Loop Control Panel, Complete with Printer, no Charger
2	6500/BEZEL	6500 Standard Enclosure Semi-Recessed Mounting Bezel Grey
3	SPM0002	Plant Isolate Key Switch Fixed into Panel Inner Plate & Wired to Terminals Labelled "PLANT ISOLATE" for 6500, 6400 & 6300 Panels
4	6000/MICCO	Monitored Input Clean Contact Output Interface Unit, Flush 2 Gang Plate
5	MICCO/BOX	Mounting Back Box For MICCO & ZAI
6	6000PLUS/HT/S	Heat Sensor Complete with Sounder
7	6000P/HT/SVAD	Heat Sensor Complete with Sounder and LED VAD
8	6000PLUS/OPHT	Optical Heat Sensor
9	6000PLUS/OPHT/S	Optical Heat Sensor Complete with Sounder
10	6000P/OPHT/SVAD	Optical Heat Sensor Complete with Sounder and LED VAD
11	6000PLUS/FFBASE	Fast Fix Semi-Recessed Base
12	6000/MCP	Manual Call Point Complete with Isolator
13	MCP/BOX	Standard Red Mounting Box
14	6000/VAD/C/RED	Ceiling Mount VAD, White LED, Red Body, Loop Powered
15	6000/VAD/W/RED	Wall Mount VAD, White LED, Red Body, Loop Powered
16	6000/SSR/VAD	Combined Sounder & VAD, White LED, Red Body, Loop Powered
17	6000PLUS/SVAD	6000PLUS Discrete Ceiling Sounder VAD (Base Required)
18	6000PLUS/BASE	6000PLUS Common Base
19	9800EN-18AH	Dual-Path Battery Charger - 8A Charger, 18 Amp Hour Batteries
20	ZONE CHART 400 X 400	Zone Layout Plan Standard Sized 400mm x 400mm Paper Framed
21	LOGBOOK	Fire Alarm Log Book
22	MCP/PC	Transparent Hinged Cover for MCP Call Point

MCC Storage & Warehouse

Item	PRODUCT CODE	DESCRIPTION
1	6501/NET64/O/C	1 Loop Control Panel, no Printer, Complete with Charger
2	6000/MICCO	Monitored Input Clean Contact Output Interface Unit, Flush 2 Gang Plate
3	MICCO/BOX	Mounting Back Box For MICCO & ZAI
4	6000PLUS/HT	Heat Sensor
5	6000P/OPHT/SVAD	Optical Heat Sensor Complete with Sounder and LED VAD
6	6000PLUS/FFBASE	Fast Fix Semi-Recessed Base
7	6000/MCP	Manual Call Point Complete with Isolator
8	MCP/BOX	Standard Red Mounting Box
9	6000/VAD/W/RED	Wall Mount VAD, White LED, Red Body, Loop Powered
10	6000/SSR/VAD	Combined Sounder & VAD, White LED, Red Body, Loop Powered
11	MCP/PC	Transparent Hinged Cover for MCP Call Point

MCC Bin Store

Item	PRODUCT CODE	DESCRIPTION
1	6000/MICCO	Monitored Input Clean Contact Output Interface Unit, Flush 2 Gang Plate
2	MICCO/BOX	Mounting Back Box For MICCO & ZAI
3	6000/MCP	Manual Call Point Complete with Isolator
4	MCP/BOX	Standard Red Mounting Box
5	6000/SSR/VAD	Combined Sounder & VAD, White LED, Red Body, Loop Powered
6	MCP/PC	Transparent Hinged Cover for MCP Call Point

Sublet

Item	PRODUCT CODE	DESCRIPTION
1	6501/NET64/O/C	1 Loop Control Panel, no Printer, Complete with Charger
2	SPM0002	Plant Isolate Key Switch Fixed into Panel Inner Plate & Wired to Terminals Labelled "PLANT ISOLATE" for 6500, 6400 & 6300 Panels
3	6000/MICCO	Monitored Input Clean Contact Output Interface Unit, Flush 2 Gang Plate
4	MICCO/BOX	Mounting Back Box For MICCO & ZAI
5	6000P/OPHT/SVAD	Optical Heat Sensor Complete with Sounder and LED VAD
6	6000PLUS/FFBASE	Fast Fix Semi-Recessed Base
7	6000/MCP	Manual Call Point Complete with Isolator
8	MCP/BOX	Standard Red Mounting Box
9	6000/VAD/W/RED	Wall Mount VAD, White LED, Red Body, Loop Powered
10	6000/SSR/VAD	Combined Sounder & VAD, White LED, Red Body, Loop Powered
11	ZONE CHART 400 X 400	Zone Layout Plan Standard Sized 400mm x 400mm Paper Framed
12	LOGBOOK	Fire Alarm Log Book
13	MCP/PC	Transparent Hinged Cover for MCP Call Point

Additional Sublet

Item	PRODUCT CODE	DESCRIPTION
1	6000/MICCO	Monitored Input Clean Contact Output Interface Unit, Flush 2 Gang Plate
2	MICCO/BOX	Mounting Back Box For MICCO & ZAI
3	6000P/OPHT/SVAD	Optical Heat Sensor Complete with Sounder and LED VAD
4	6000PLUS/FFBASE	Fast Fix Semi-Recessed Base
5	6000/MCP	Manual Call Point Complete with Isolator
6	MCP/BOX	Standard Red Mounting Box
7	6000/SSR/VAD	Combined Sounder & VAD, White LED, Red Body, Loop Powered
8	MCP/PC	Transparent Hinged Cover for MCP Call Point

Biffa Offices

Item	PRODUCT CODE	DESCRIPTION
1	6504/NET64/P/O	4 Loop Control Panel, Complete with Printer, no Charger
2	6000/LOOP/REPEATER	6000 Loop Powered Repeat Panel
3	6500/BEZEL	6500 Standard Enclosure Semi-Recessed Mounting Bezel Grey
4	SPM0002	Plant Isolate Key Switch Fixed into Panel Inner Plate & Wired to Terminals Labelled "PLANT ISOLATE" for 6500, 6400 & 6300 Panels
5	6000/MICCO	Monitored Input Clean Contact Output Interface Unit, Flush 2 Gang Plate
6	MICCO/BOX	Mounting Back Box For MICCO & ZAI
7	6000PLUS/HT/S	Heat Sensor Complete with Sounder
8	6000P/HT/SVAD	Heat Sensor Complete with Sounder and LED VAD
9	6000PLUS/OPHT	Optical Heat Sensor
10	6000PLUS/OPHT/S	Optical Heat Sensor Complete with Sounder
11	6000P/OPHT/SVAD	Optical Heat Sensor Complete with Sounder and LED VAD
12	6000PLUS/FFBASE	Fast Fix Semi-Recessed Base
13	6000/MCP	Manual Call Point Complete with Isolator
14	MCP/BOX	Standard Red Mounting Box
15	6000/VAD/C/RED	Ceiling Mount VAD, White LED, Red Body, Loop Powered
16	6000/VAD/W/RED	Wall Mount VAD, White LED, Red Body, Loop Powered
17	6000PLUS/SVAD	6000PLUS Discrete Ceiling Sounder VAD (Base Required)
18	6000PLUS/BASE	6000PLUS Common Base
19	9800EN-18AH	Dual-Path Battery Charger - 8A Charger, 18 Amp Hour Batteries
20	ZONE CHART 400 X 400	Zone Layout Plan Standard Sized 400mm x 400mm Paper Framed
21	LOGBOOK	Fire Alarm Log Book
22	MCP/PC	Transparent Hinged Cover for MCP Call Point

Biffa Workshop

Item	PRODUCT CODE	DESCRIPTION
1	6000/MICCO	Monitored Input Clean Contact Output Interface Unit, Flush 2 Gang Plate
2	MICCO/BOX	Mounting Back Box For MICCO & ZAI
3	6000P/OPHT/SVAD	Optical Heat Sensor Complete with Sounder and LED VAD
4	6000PLUS/FFBASE	Fast Fix Semi-Recessed Base
5	6000/MCP	Manual Call Point Complete with Isolator
6	MCP/BOX	Standard Red Mounting Box
7	6000/SSR/VAD	Combined Sounder & VAD, White LED, Red Body, Loop Powered
8	MCP/PC	Transparent Hinged Cover for MCP Call Point

Gatehouse

Item	PRODUCT CODE	DESCRIPTION
1	6501/NET64/P/C	1 Loop Control Panel, Complete with Printer and Charger
2	6500/BEZEL	6500 Standard Enclosure Semi-Recessed Mounting Bezel Grey
3	SPM0002	Plant Isolate Key Switch Fixed into Panel Inner Plate & Wired to Terminals Labelled "PLANT ISOLATE" for 6500, 6400 & 6300 Panels
4	6000/MICCO	Monitored Input Clean Contact Output Interface Unit, Flush 2 Gang Plate
5	MICCO/BOX	Mounting Back Box For MICCO & ZAI
6	6000P/HT/SVAD	Heat Sensor Complete with Sounder and LED VAD
7	6000P/OPHT/SVAD	Optical Heat Sensor Complete with Sounder and LED VAD
8	6000PLUS/FFBASE	Fast Fix Semi-Recessed Base
9	6000/MCP	Manual Call Point Complete with Isolator
10	MCP/BOX	Standard Red Mounting Box
11	6000PLUS/SVAD	6000PLUS Discrete Ceiling Sounder VAD (Base Required)
12	6000PLUS/BASE	6000PLUS Common Base
13	ZONE CHART 400 X 400	Zone Layout Plan Standard Sized 400mm x 400mm Paper Framed
14	LOGBOOK	Fire Alarm Log Book
15	MCP/PC	Transparent Hinged Cover for MCP Call Point

Winter Maintenance Compound & Welfare

Item	PRODUCT CODE	DESCRIPTION
1	6501/NET64/P/C	1 Loop Control Panel, Complete with Printer and Charger
2	6500/BEZEL	6500 Standard Enclosure Semi-Recessed Mounting Bezel Grey
3	SPM0002	Plant Isolate Key Switch Fixed into Panel Inner Plate & Wired to Terminals Labelled "PLANT ISOLATE" for 6500, 6400 & 6300 Panels
4	6000PLUS/OPHT/S	Optical Heat Sensor Complete with Sounder
5	6000P/OPHT/SVAD	Optical Heat Sensor Complete with Sounder and LED VAD
6	6000PLUS/FFBASE	Fast Fix Semi-Recessed Base
7	6000/MCP	Manual Call Point Complete with Isolator
8	MCP/BOX	Standard Red Mounting Box
9	6000/MCP/WP	Weatherproof Manual Call Point
10	6000/SSR/VAD	Combined Sounder & VAD, White LED, Red Body, Loop Powered
11	6000PLUS/SVAD	6000PLUS Discrete Ceiling Sounder VAD (Base Required)
12	6000PLUS/BASE	6000PLUS Common Base
13	ZONE CHART 400 X 400	Zone Layout Plan Standard Sized 400mm x 400mm Paper Framed
14	LOGBOOK	Fire Alarm Log Book
15	MCP/PC	Transparent Hinged Cover for MCP Call Point

ASPIRATING DETECTION SYSTEMS

Protec Pro Point Plus Range of aspirating smoke detectors, together with complete standby power supplies, interfaces and all associated sampling pipework and accessories.

The Aspirating Fire Detection System has been designed in accordance with British Standard BS 5839-1:2017,& BS6266:2011 -Section 8.2.1

Equipment Schedule

MCC Office & Admin

Item	PRODUCT CODE	DESCRIPTION
1	PRO POINT PLUS 2 OPCO	PRO POINT PLUS 2 Two Pipe Unit Including SCD
2	PRO POINT PLUS 3 OPCO	PRO POINT PLUS 3 Three Pipe Unit Including SCD
3	9300EN-18	EN Battery Charger - 3A, 18A/hour
4	PROTEC 25mm 3 STAGE PIPE DUST FILTER	Protec 3 Stage Inline Pipe Dust Filter
5	3.0mm Yellow HIT	3.0mm YELLOW HOLE IDENTIFICATION TAG
6	3.5mm Blue HIT	3.5mm BLUE HOLE IDENTIFICATION TAG
7	5.0mm White HIT	5.0mm WHITE HOLE IDENTIFICATION TAG

MCC Storage & Warehouse

Item	PRODUCT CODE	DESCRIPTION
1	PRO POINT PLUS 1 OPCO	PRO POINT PLUS 1 One Pipe Unit Including SCD
2	PRO POINT PLUS 3 OPCO	PRO POINT PLUS 3 Three Pipe Unit Including SCD
3	9300EN-12	EN Battery Charger - 3A, 12A/hour
4	9300EN-18	EN Battery Charger - 3A, 18A/hour
5	PROTEC 25mm 3 STAGE PIPE DUST FILTER	Protec 3 Stage Inline Pipe Dust Filter
6	2.5mm Grey HIT	2.5mm GREY HOLE IDENTIFICATION TAG
7	3.0mm Yellow HIT	3.0mm YELLOW HOLE IDENTIFICATION TAG
8	3.5mm Blue HIT	3.5mm BLUE HOLE IDENTIFICATION TAG
9	4.0mm Green HIT	4.0mm GREEN HOLE IDENTIFICATION TAG
10	5.0mm White HIT	5.0mm WHITE HOLE IDENTIFICATION TAG

MCC Bin Store

Item	PRODUCT CODE	DESCRIPTION
1	PRO POINT PLUS 3 OPCO	PRO POINT PLUS 3 Three Pipe Unit Including SCD
2	9300EN-18	EN Battery Charger - 3A, 18A/hour
3	PROTEC 25mm 3 STAGE PIPE DUST FILTER	Protec 3 Stage Inline Pipe Dust Filter
4	3.0mm Yellow HIT	3.0mm YELLOW HOLE IDENTIFICATION TAG
5	5.0mm White HIT	5.0mm WHITE HOLE IDENTIFICATION TAG

Sublet

Item	PRODUCT CODE	DESCRIPTION
1	PRO POINT PLUS 4 OPCO	PRO POINT PLUS 4 Four Pipe Unit Including SCD
2	9300EN-18	EN Battery Charger - 3A, 18A/hour
3	PROTEC 25mm 3 STAGE PIPE DUST FILTER	Protec 3 Stage Inline Pipe Dust Filter
4	3.0mm Yellow HIT	3.0mm YELLOW HOLE IDENTIFICATION TAG
5	3.5mm Blue HIT	3.5mm BLUE HOLE IDENTIFICATION TAG
6	4.0mm Green HIT	4.0mm GREEN HOLE IDENTIFICATION TAG

Additional Sublet

Item	PRODUCT CODE	DESCRIPTION
1	PRO POINT PLUS 3 OPCO	PRO POINT PLUS 3 Three Pipe Unit Including SCD
2	9300EN-18	EN Battery Charger - 3A, 18A/hour
3	PROTEC 25mm 3 STAGE PIPE DUST FILTER	Protec 3 Stage Inline Pipe Dust Filter
4	5.0mm White HIT	5.0mm WHITE HOLE IDENTIFICATION TAG

Biffa Office

Item	PRODUCT CODE	DESCRIPTION
1	PRO POINT PLUS 3 OPCO	PRO POINT PLUS 3 Three Pipe Unit Including SCD
2	9300EN-18	EN Battery Charger - 3A, 18A/hour
3	PROTEC 25mm 3 STAGE PIPE DUST FILTER	Protec 3 Stage Inline Pipe Dust Filter
4	3.0mm Yellow HIT	3.0mm YELLOW HOLE IDENTIFICATION TAG
5	5.0mm White HIT	5.0mm WHITE HOLE IDENTIFICATION TAG

Biffa Workshop

Item	PRODUCT CODE	DESCRIPTION
1	PRO POINT PLUS 4 OPCO	PRO POINT PLUS 4 Four Pipe Unit Including SCD
2	9300EN-18	EN Battery Charger - 3A, 18A/hour
3	PROTEC 25mm 3 STAGE PIPE DUST FILTER	Protec 3 Stage Inline Pipe Dust Filter
4	3.0mm Yellow HIT	3.0mm YELLOW HOLE IDENTIFICATION TAG
5	3.5mm Blue HIT	3.5mm BLUE HOLE IDENTIFICATION TAG
6	5.0mm White HIT	5.0mm WHITE HOLE IDENTIFICATION TAG

Hammerstone Road Depot Refurbishment
Fire Alarm System

Interfacing and Third Party Equipment

Each Protec Pro Point Plus aspirating detector includes built in Loop Interface units to the Protec 6000 Series FireAlarm Panels. This will provide Fault, Pre Alarm and Fire 1 direct to the Protec Fire Alarm Panel.

Each Protec Pro Point Plus aspirating detector includes 5no. Programmable volt free change-over contacts which can be configured to provide alarm and fault contacts from the aspirating detector to the main building fire alarm system.

Appendix 9 – EVC Equipment - Staff Provision

Earthing systems guidance

Earthing systems guidance

EVSE (electric vehicle supply equipment) earthing.

There are numerous earthing systems provided in the UK, all have characteristics that have an impact on the installation of Electric Vehicle Supply Equipment (EVSE). little guidance is provided by manufacturers on earthing systems to be used for EVSE, for Installers new to this industry this presents difficulties in deciding the safest method chosen for earthing.

A recent industry study of newly installed EVSE revealed 40% of EVSE installations where TT earthing arrangements provided were either outside of specifications or electrodes were badly located.

This guidance is provided after many years of experience of installing EVSE and from many sources of information, electrical contractors, internal electricians, British and IEC standards, it remains the responsibility of the system designer or engineer to decide the best method for installing an EVSE on a case-by-case basis. Where references are made to Pod Point specific products these should not be used with any other makes of EVSE. This document is provided to inform system designers and engineers alike on earthing arrangements of EVSE.

Vehicle charging risks associated with PME and TT earths

If an EVSE is installed inside a garage and charging a vehicle can only be performed inside the garage the existing earthing system of the property is recommended.

Where a vehicle may be charged outside of a garage the risk of a failed PME neutral may be hazardous, as the vehicle is outside of the equipotential zone of the garage/dwelling. The voltage difference between true earth (where vehicle is parked) and vehicle chassis can become dangerous to touch, this is true for all PME earthing systems where the vehicle is located outside with the exception of multi storey car parks (upper exposed levels) and similar locations.

Where a TT earthing system is provided for the dwelling a failed electrode may result in no earth being provided to the vehicle or worst still a badly located electrode near a failed PME connected service. The vehicle could become live as step voltage increases away from the earthing electrode. A failure of this type can result in the same risk as a failed PME connected system.

To eliminate the above risk It is recommended earth electrodes are not installed close to a building or any underground PME connected service, DNO's recommend a 10M distance from any earthed HV underground service. BS7671 recommends at least 2 meters from any other services to minimise electrode touch voltage to no more than 40V If the nearby PME service were to become live. Applying these measures in practice maybe difficult, a document search of buried services may not reveal accurate drawings therefore a scanner should be used to locate any potential underground risks before installing an electrode.

BS7671: Creating a TT earthing system for charging equipment or the whole installation as an alternative to using a PME earthing facility with one of methods (i) to (v) above may not be an appropriate solution due to the inability to provide sufficient separation from buried metalwork connected to the supply PEN conductor.

Where it is decided the safe fitment of a TT electrode in not possible a standard mode 3 EVSE should not be installed. This can create greater risks as EV owners may then rely on PME connected Mode 2 EVSE for charging (bizarrely this is allowed). Using mode 2 equipment adds the risks of fire where old domestic sockets are used, a common occurrence when using mode 2 equipment.

Earthing systems guidance

Pod Point Design

Being fully aware of the risks of TT earthing systems, in 2016 Pod Point designed into its hardware a system that monitors the incoming earth for abnormal readings, if detected an earth isolation relay used in conjunction with the power switching contacts isolates the vehicle from supply and the earth. A later software update also included the detection of failed PME systems, at this time PME connection was still permitted by BS7671 under the exception of “not practicable”.

BS7671 does not permit the switching of the protective earth conductor to an appliance, Pod Points internal electronics monitor the status of the internal earth switching relay to ensure it remains safe. IEC61861:2017 (BS EN61851:2019) allows switching of protective earth conductor for isolation purposes inside the EVSE (section 8.4 indent b).

Where rapid chargers or standard EVSE that cannot not provide their own galvanic isolation are desired, BS7671 regulations may be breached if installed with an additional “earth isolating” device, in these cases the device manufacturers liability should be gained.

A failed PME neutral (single or 3 phase systems) on EVSE’s that perform voltage checks between Line and Neutral conductors will result in a greater than 90% detection rate where the neutral and line phase shifts beyond approximately 15° and a 100% detection rate where it does not, risk is further reduced as the danger is not present when the vehicle is not charging but connected. These minority cases do require unique phase loads not consistent with constant current EV charging. the risks associated with TT faults is higher. It is also misreported in these minority cases the fault condition results in a touch voltage of up to 400v being present, this maximum would be approximately 125v due to the voltage detection systems operation, EVSE that also monitor the earth cable current may not allow sufficient current to flow through the human body before isolation is provided.

Pod Point compliance

To meet the requirements of BS7671: 722.411.4.1 the Pod Point is designed with at least 6mm creepage distances for pseudo class 2 operation and provides redundant power contacts to ensure clearances are not compromised, when in “charging mode” the Pod Point becomes a class 1 device (Minimum requirement for any mode 1, 2 or 3 EVSE).

The Pod Point may be safely connected to a TT earthing system, if this introduces any risk or locations where a low earth impedance is not possible it should be connected to a TN-C-S, TN-S or PME earthing system. It does not require any special arrangements. It complies with BS7671: 722.411.4.1 exception (v) - in which it does not result in a lesser degree of safety than using (iii) or (iv).

Single phase Pod Points should not be installed where a 3 phase supply feed has been provided to the unit. See BS7671 annex A722.4, only 3 phase Pod Points should be installed where it is fed with 3 phases.

Recently other EVSE manufacturers have adopted similar systems for PME fault protection, not all are able to detect failed TT earthing systems.

Pod Point Array Charging

For array connected Pod Points the PME fault protection system may not work. These units must be connected to a TT system if located outside, this is due to a hardware limitation. When installed the main earth input and output must be linked on the Pod Point.

Earthing systems guidance

Twin Pod Points and DC rapid chargers (also see special locations)

For Twin Pod Points where it is typical to connect “street furniture” to a TT earthing arrangement it is advisable to do so, generally the TT arrangement is provided when groundworks are conducted and does not adversely affect the installation cost or time.

Where the Twin unit is fitted close to a PME metal clad building or structure and the introduction of a TT system may compromise an equipotential zone safety, it is advisable the twin unit be connected to the same PME earthing service used locally. (not for array enabled Twin Pod Points).

DC chargers that do not provide PME fault protection or galvanic isolation should include fitment of an additional PME protection device, these chargers should not be directly fixed to PME connected metal clad buildings or structures.

Types of earthing arrangements and associated risks.

TN-S (Terra Neutral - Separate)

TN-S system uses a separate earth connection originating at the substation, this is generally regarded as the safest method of earthing, it provides a low impedance path for fault currents and has proven to be very reliable.

TN-C-S Terra Neutral Combined then Separated

TN-C-S similarly to TN-S provides a low impedance earth return path but is shared using a combined neutral connection, again it has been a very reliable system.

PME (TN-C-S) with Protective Multiple Electrodes/Earths

PME system work on a similar basis to TN-C-S but external Electrodes are also provided along the external supply cables, this system has proven to be reliable but as the system ages problems do occur at the electrode junctions (corrosion etc.), if the Neutral fails the earth will also fail, potentially placing a dangerous voltage on the earthing system to a property.

TT Terra Terra (earthed at each end of supply)

TT systems are not provided with an earth conductor, the Neutral at the origin (substation or transformer) is connected to a local earth electrode but an additional electrode should be provided at the property, this system is generally safe but can suffer from electrode failure. If a “new” TT electrode fitted is providing a much lower than expected reading for the local area it may be due to close proximity to a buried PME service.

IT Independant Terra - No earth or neutral provided at supply source.

IT systems are quite rare, they do not have any earth connection at the substation or transformer, IT systems can suffer a direct short circuit to GND (1st fault condition) but remain operative. This may be of high importance where the loss of supply can be catastrophic (life support equipment fails etc..) all IT systems require a local earthing arrangement (typically a GND electrode), MCB protection is required on all supply poles as all cables are live (there is no neutral).

IMPORTANT NOTE:

Potential network “upgrades” in future may result in TN-S or TN-C-S system becoming PME systems, It is therefore advisable to treat all other than TT and IT systems as PME.

Special Locations

For properties that are of metal construction or have metal clad exteriors that are PME connected, a risk already exists, the fitment of EVSE with PME fault protection would provide a far lesser risk to that of an EVSE that does not. Installing a TT electrode close to a PME connected structure would greatly increase the risk if the PME system were to fail, “standard” EVSE should not be fitted in these locations. Step voltage increases with distance from a building or structure must be considered. EVSE that do not include PME protection may energise the chassis of vehicles that are standing on true ground away from the structure. In these cases, the inclusion of an isolation transformer or additional unit providing PME fault protection should be considered.

For car ferries or other earth free locations a galvanically isolated supply transformer should be used that comply with BS EN 61558-2-4 (BS7671: 722.413.1.2). Ships and ferries fall outside the requirements of BS7671 and operators adopt their own standards, these should be adhered to where appropriate.

Equipotential zone risks

Some metallic lighting columns are provided with a PME supply, unless assurances can be provided these cannot fail, the location of these if within the equipotential zone should be taken into consideration if the EVSE is to be connected to a TT earthing system.

BS7671 section 722.410.3.5 should be used with a common sense approach – the location of a bollard or other means of restriction ensuring such an object is outside the equipotential zone would be sufficient, an example maybe a bollard, fence or wall that prevents vehicle parking close to the lighting column (within 2 meter touch distance).

BS7671 issues

3 phase supply load characteristics

Section 722.411.4.1 (i) should not be considered in a domestic property, annex 722.2 calculations do not consider differing single, bi and 3 phase vehicle loads (dependant on connected vehicle) calculations require a constant balanced load current in excess of 50 amps per phase that are unrealistic for a domestic property.

Supplementary earth electrodes

Section 722.411.4.1 (ii) should NOT be considered when installing EVSE, the calculations of BS7671 annex A722.3 cannot be achieved as there is no way of knowing the total external fault current the electrode may be exposed too, the supplementary electrode could be the only neutral return for many properties and exposed to many hundreds of amps introducing a further risk of fire. In addition a shallow fitment of an electrode may result is a high local step voltage.

It should be noted some DNO’s do fit supplementary PME electrodes in this way.

If supplementary electrodes are fitted the electrode should be buried well below ground level and the connection point to the PME system be made outside of the dwelling to minimise fire hazards.

Where livestock maybe present it is recommended the location of supplementary electrode(s) be fenced off to a minimum radius of 2 meters to reduce the potential step voltage becoming dangerous to an animal.

Earthing systems guidance

The following table provides guidance on allowed earthing methods for EVSE

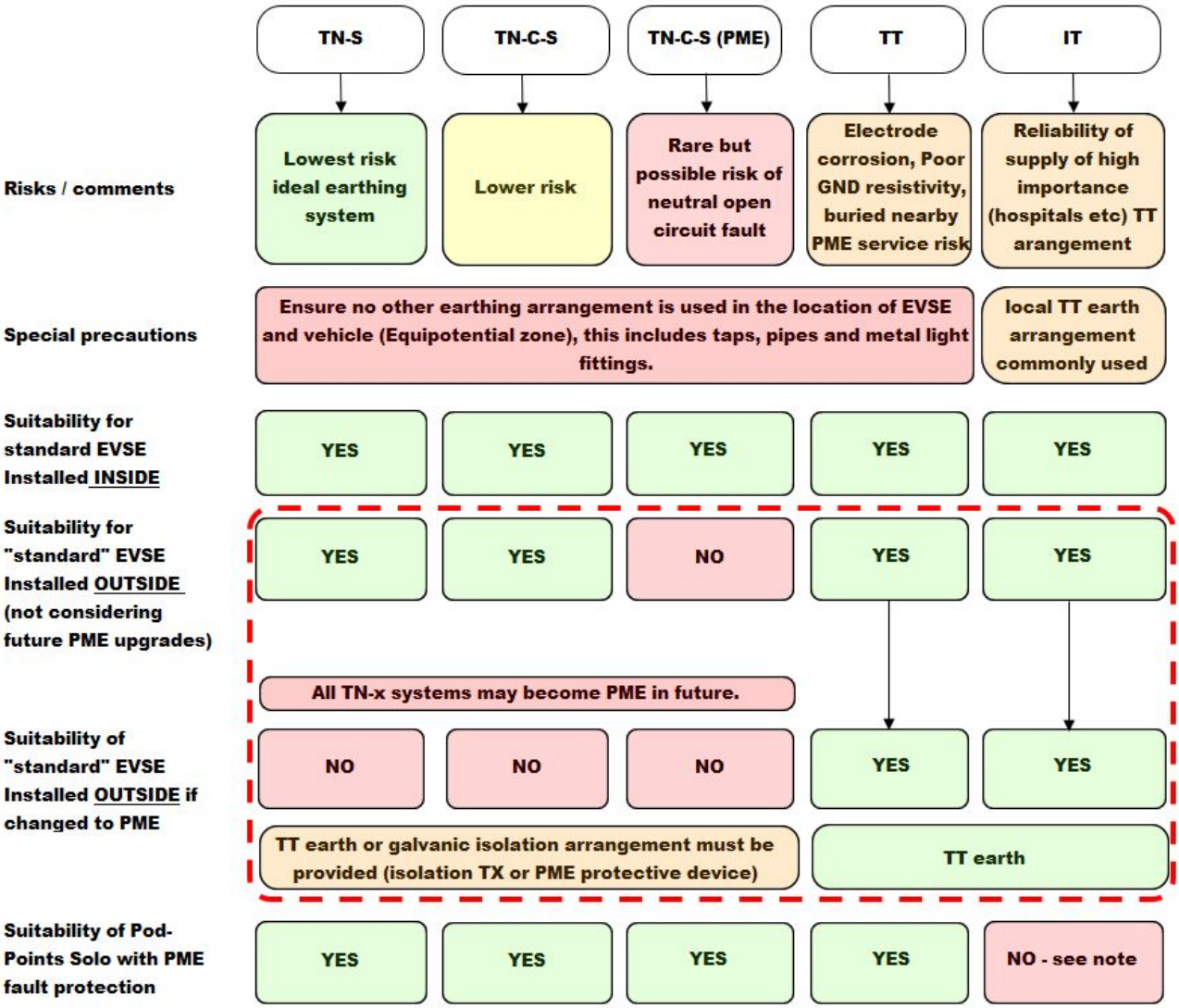

Notes:

- It is assumed pre-existing earthing is used and no other earthing system exists in the equipotential zone.
- If an IT supply is provided a “non UK” Pod Point should be installed, fault protection will always detect and report a supply fault for UK versions (Reversed polarity or open circuit earth).
- The use of a tethered EVSE inside a garage limiting the charging location of the vehicle can be installed with PME earthing.

Earthing systems guidance

Additional notes on earthing and the uses of accessories.

It remains the responsibility of the installer to conduct a risk assessment of the immediate area to a minimum range of 10m (equipotential zone) to ensure no other conductive metal fixings pose risks (mixture of TT/TN-S and TN-C-S), this is important where charging cable length may enable charging inside or outside of a building/garage where the vehicle is within touch distance of the object(s).

The customer should be made aware of any existing sources of danger, light fittings, water taps and metallic pipes bonded to a PME earth, It is advised any issues identified should be addressed irrespective of EV charging or not.

BS7671: 722.410.3.5 states “The protective measures of obstacles and placing out of reach shall not be used”, this implies such fittings must be removed or replaced with plastic parts. In the case of an outside water tap the pipe could be changed to plastic but should be long enough to factor in water conductivity (e.g. 1 metre).

TT earthing if existing should be checked for an impedance of less than 100 ohms, this is to ensure seasonal changes do not adversely affect its performance (*BS7671: 542.2.4 The type and embedded depth of an earth electrode shall be such that soil drying and freezing will not increase its resistance above the required value*), in addition any electrodes or earth cables should be visually checked for a good state of repair, any potential defects found should be rectified.

Varying locations throughout the UK have a large bearing on the impedance of TT systems, areas that are built on bedrock are notorious for poor TT readings, if a TT earth is found to have an unusually lower than typically expected for the local area it is advisable to check the electrode is not installed close to a buried PME connected service, re-location of the electrode(s) may be required.

Where certain conditions dictate an earth electrode must be used it shall be independent from the distributors earth system with no direct interconnection (the incoming supply SWA protective earth should be isolated from the housing and/or earth electrode). The electrical installer shall install a suitable electrode complete with termination housing and covers where appropriate. Warning labels should be attached and be clearly visible, e.g. close to any unconnected SWA protective earth.

The earth connection shall be made from the electrode to the EVSE via copper conductor earth wire of an appropriate CSA for the installation. The earth wire shall be installed in conduit where there is a risk of mechanical damage or prolonged UV exposure.

If a cable passes through any metallic parts (signage etc..) these will also require bonding to earth unless SWA is used.

Smart cables and “adaptors” used with Pod Points (and other EVSE manufacturers) are not allowed, BS EN61851 forbids their use, these non compliant “smart” cables can and do over ride safety features of mode 3 EVSE and should not be used. Only “adaptors”, (those that do not change charging modes) approved by EVSE and/or vehicle manufacturers may be used.

Smart cables will keep the EV connected to an earth system longer than is necessary without a significant supply load.

pod POINT

Pod Point
Array Charging System

System Description

The Pod Point Array charging system allows multiple chargers to manage their individual and total charging load within the limits of a fixed supply. An Array system allows many more chargers to be fitted than would normally be the case as each charger will de-rate as necessary to never overload the incoming mains feed. The system consists of suitable cabinets containing the Pod Point Array controller electronics and MCBs. A chosen number of Pod Point double socketed chargers are wired to these cabinets (up to 4 for a single phase system or up to 12 for a three phase system).

System Requirements

- A Wi-Fi network must be available where the Pod Point double socketed EVCPs are installed
- The total amount of Pod Point double socketed EVCPs allowed must be calculated with a safety contingency based on the supply
- The Array Charging system can be installed on single phase supply or three phase supply

System Diagram

Array Charging is available in different options to cover most system requirements. Pod Point are able to advise on suitable configurations.

Single Phase supply – up to 4 double socketed Pod Points (Fig. 1)

For a supply of 100A up to 4 double socketed Pod Point EVCPs (8 outlets) can be installed (depending on maximum available supply - See Table 1)

Fig 1. Single-Phase Array System Configuration

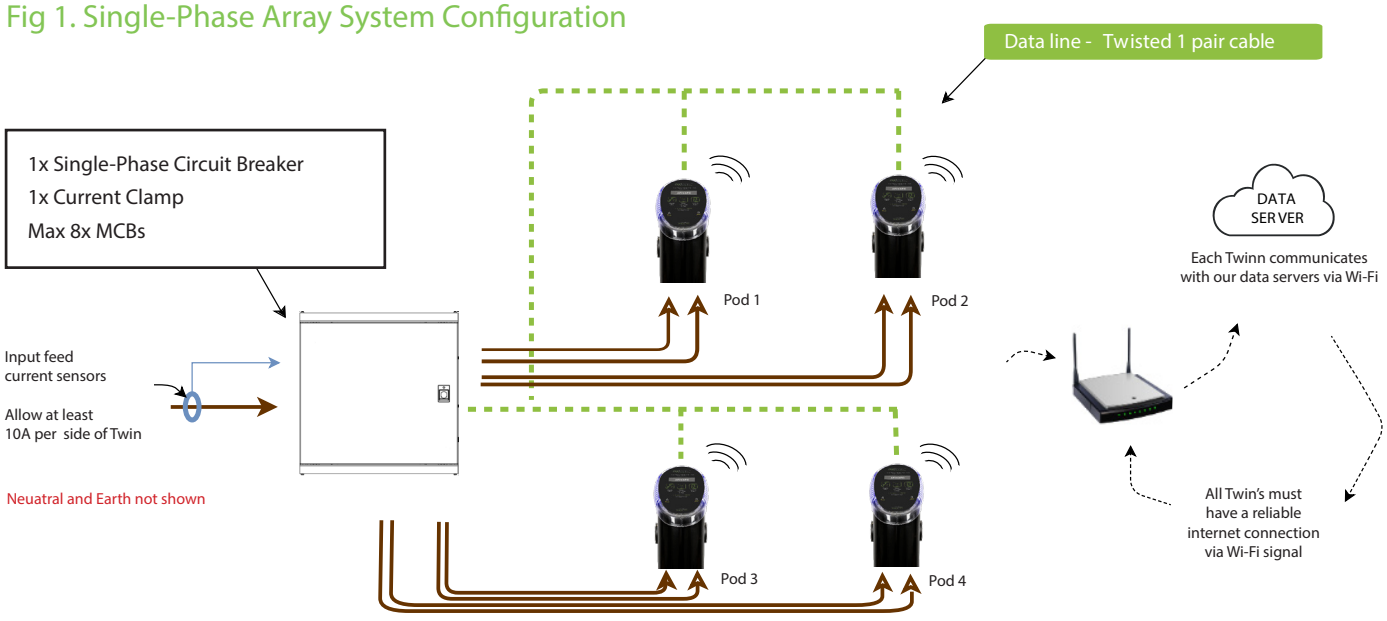

Pod Point
Array Charging System

Three Phase supply – up to 12 double socketed Pod Points (Fig. 2)

Option 2 is Pod Point's preferred option. It allows load management of up to 12 double socketed Pod Point EVCPs on a 100A TPN (Three Phase) supply. On a 100A TPN system (Fig 2), the Pod Point EVCPs must be installed in clusters of a maximum of 4 units per phase. Each cluster connects to one phase of the supply.

Fig 2. Three-Phase Array System Configuration

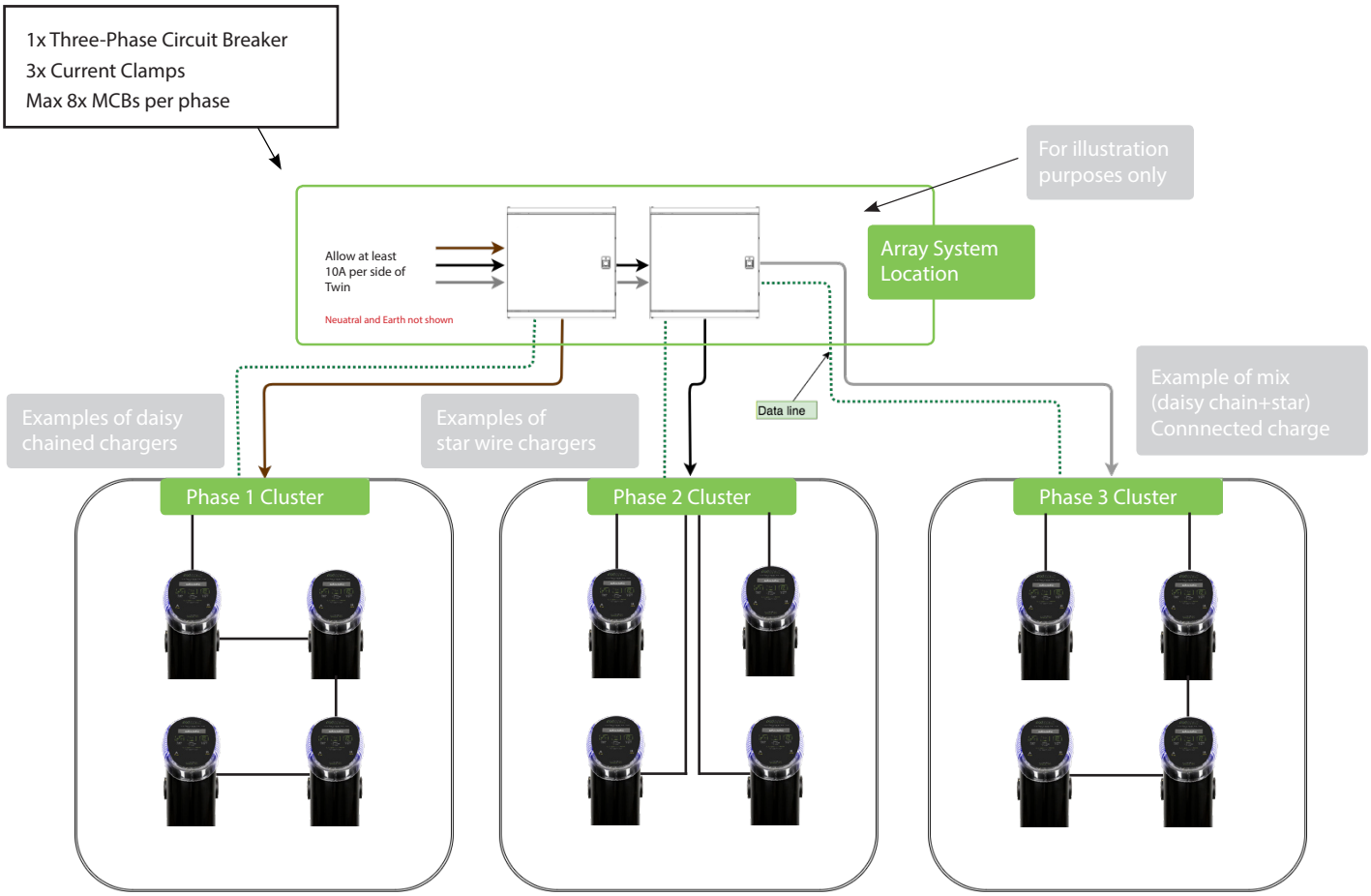

Pod Point
Array Charging System

Array Charging Distribution Board

- Fully assembled three phase system includes: 40A 2-pole MCBs, 3x current clamps, 1x three phase circuit breaker and Array controllers
- Up to 4x double socketed Pod Point EVCPs per phase (for 100A supply). See Table 1 for different supplies and amount of Pod Point EVCPs allowed

Table 1. Maximum supplies available for Array Charging System

Max supply	1-ph system	3-ph system
	Amount of double socketed POD Point EVCPs per system	
40A	1	3 (1 per phase)
60A	2	6 (2 per phase)
80A	3	9 (3 per phase)
100A (default)	4	12 (4 per phase)

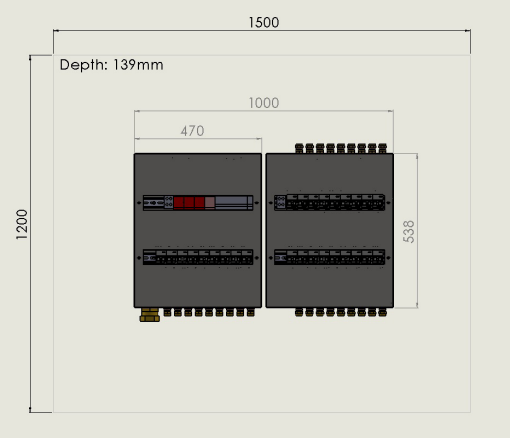

Fig 3 Horizontal installation of Three-Phase system

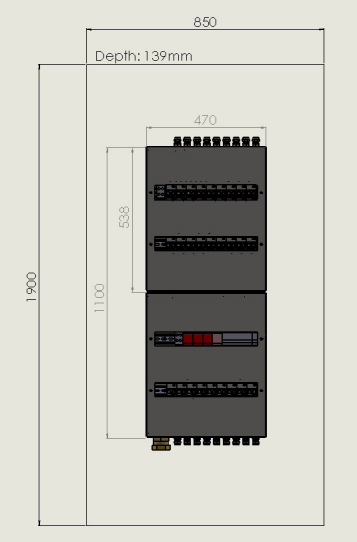

Fig 4. Vertical installation of Three-Phase system

Table 2. Dimensions of Array System Installation

System*	Dimension H (mm)	Dimension W (mm)	Dimension D (mm)
Three-Phase Horizontal (Fig 3)	1200	1500	139
Three-Phase Vertical (Fig 4)	1900	800	139

*Single phase system comprises of one DB box

Pod Point Twin
Datasheet

Physical Properties

Height	1330mm
Socket Height	1000mm
Width	241mm
Depth	295mm
Standard colour	RAL9005 (Black)
Paint finish	Anti Graffiti
Shipping weight	24kg
Operating temp	-30°C to +50°C
Operating humidity	95% Non Cond
Enclosure rating	Mennekes socket: IP44 Post: IP54



Introduction

The Pod Point Twin product is designed for locations where a publicly accessible charge point with multi- user capability is required.

Twin sockets

Each post can charge two vehicles simultaneously. We can supply either a Twin 3.7kW or 7kW single phase Pod Point, or a Twin 22kW three phase Pod Point.

Access

Each charging socket is protected by a hinged flap. Users begin charging by plugging in and using a mobile phone with our Pay-As-You-Go feature to authenticate the charge. For safety, power is only supplied to compatible connectors.

Pay As You Go Compatible

Twin units are compatible with our Pay-As-You-Go system, generating revenue to the host.

Status

The status of each charging socket is shown by lights (visible from the road).

User instructions

The Pod Point is designed to be intuitive. For extra help, instructions are displayed on the unit and on the Pod Point Open Charge app help guide drivers through the process.

Data Fees

To enable communication with the Pod Point Network, the data contract (if applicable) for the in-built SIM card must be maintained. Data costs vary with contract duration and Management System feature requirements.

Connected

Pod Point Twin units are designed to communicate with our Pod Point Network.

Mode 3

All our TwinPod Points use the industry standard Mode 3 charging protocols.

Installation

The Pod Point Twin range of charge points are designed for installation in either open air or protected environments. Each is supplied with a ground anchor, and is simple to install and connect. Feeder pillars, protective guards, signage, and other ancillaries required at the installation site are also available. Pod Point can, in some territories, provide a turn-key service for the installation and commissioning of charge points. Posts are not put into service, nor is the product warranty valid, until installation in accordance with Pod Point's protocols and local regulations has been verified.

After sales service

We will not undertake any repairs for any out-of-warranty failures without first receiving acceptance of our quotation for the related costs.

CE

Pod Point Twin
Datasheet

Security
Secure data encryption HTTPS
Wi-Fi 802.11b/g/n @ 2.4 GHz
Powerful Crypto Engine for fast, secured WLAN Connections with 256-Bit Encryption
TCP on Port 443
Mode
Access Point (only for setup)
Station
Channel Mask
1 to 13
Scan RSSI Threshold
-95dB
Station Addressing Scheme
Dynamic

Model	T7-S	T22-S
Part number	T7-S-2	T22-S-2
Charge Protocol	Mode 3	
Rated voltage	230V AC	400V AC
Rated frequency	50Hz	
Rated output current	2x32A	2x32A Three Phase
Rated output	2x7kW	2x 22kW
Phase	Single Phase	Three Phase
Over current protection	RCBO 40A per socket & software monitored	RCBO 40A 3 Phase per socket & software monitored
Ground fault protection	To be determined at point of installation	
Socket electrical compliance	IEC 62196-2	
Standards compliance	LVD 2014/35/EU, EMCD 2014/30/EU, EN61851-1 and -22, CE Certified	
Standby power consumption	8W	
Wifi Comms	(IEEE 802.11bgn)	
Network Compatible	Yes	

Limitation of liability

In no event will we accept any liability for any loss, costs or damage consequential on the use and/or misuse of our hardware products except and only to the extent that this is caused by our negligence.

Warranty

All correctly installed POD Point hardware is covered by our thirty six month limited warranty.

Any hardware failure should be promptly reported to us, ideally by e-mail to enquiries@pod-point.com, or by calling our support team on 0207 247 4114 quoting the serial number, location of the product, and giving a brief description of the failure.

Our support team will then investigate, and attempt to remotely resolve the issue. They may ask you to provide additional information to assist in this.

If the issue cannot be resolved remotely, and the product is in warranty, we will make arrangements for one of our team to visit the location and, if the issue is a result of any shortcoming in design or manufacture it will be made good free of charge or, at our option, exchanged for a replacement product.

If we attend site, and the fault is not a result of a shortcoming in design or manufacture of our product, we will make reasonable attempts to suggest what the issue is, and propose a resolution which may have a fee associated with it. A call out fee will be applicable where our product is not at fault.

Point smart charging hardware is designed to operate in co-ordination with grid demands. In periods of peak local, regional and national electrical demand charging may be interrupted or rate limited for brief periods to facilitate the need to manage the power grid. This is typically done to maintain stability of the grid, and ensure quality of supply. Where the end user has signed up to pod point data services information about each specific event is provided. The interruptions and limits are managed such that there should be no significant effect on vehicle charging overall.

CE



Fig. 1 POD Point Twin Unit

Installation Guide

This guide is intended for use by competent electrical installers with the necessary experience to carry out the installation in accordance with the local applicable regulations and legislation.

Introduction

POD Points are designed to give a long and reliable service life. However, the operational reliability depends on a number of installation factors.

Before starting installation, please confirm the following:

- There is a good GSM signal available at the installation site; suitable power source is within reasonable distance of the proposed location (consult a qualified electrician if required)
- The proposed site has been selected in order to minimise the risk of damage to the POD Point

Note on GSM signal

POD Points communicate with a control network via a GSM/GPRS connection. To allow this, a 2G mobile phone signal is required and must be checked at the site survey. Signal measurement is not an exact science as every mobile device/antenna receives with a different gain, but as a general guide; if the signal is:

- Better than -80dBm: Reception should be good
- -90dBm to -81dBm: Communication may be slow sometimes
- -91dBm or less: Communication is unlikely to be established

Note: the POD Point can still operate in standalone mode, but usage data, user data and remote support will not be available.

If any of the above requirements are not satisfied, please consult POD Point on 0207 247 4114. Alternative GSM network configurations are available if required.

Tools

Security torx bits are:
- Pin Torx T30 (upper door)
- Pin Torx T45 (lower door and ground level fixing)

Other items not supplied, but that may be required:

- M10 x 120 mm (minimum) countersunk security anchor bolts x 4 (surface mount only, suitable or local substrate)
- •5 mm steel rod (for stabilising subterranean foundation during installation only)
- Feeder Pillar

Fig. 2 Surface Mount

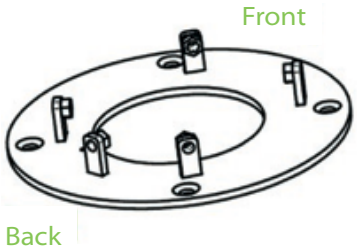

Fig. 3 Subterrenean Mount



Fig. 4 Twin single phase unit isolater box wiring

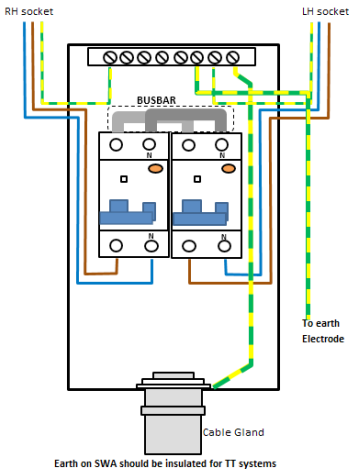

Civil Work

The surface mounting foundation adapter can be used to secure the POD Point to existing concrete (or similar) surfaces, or to a purpose laid 600 x 600 x 150 mm concrete pad. Cable entry subterranean or surface mounted.

The surface mounting plate is secured to the ground using four M10 x 120mm minimum expanding countersunk concrete anchor bolts (or preferred equivalent fixing).

You can see on figure 2 where the front of the post will be located.

The Subterranean Foundation adaptor (fig. 3) is typically set in 0.6 x 0.6 x 0.45m of PAV1 S2 Slump concrete and is designed to accept subterranean cables which are buried 450 mm below the surface. The cable enters the foundation through a standard 32~75mm Rigiduct.

It is very important that the foundation is level in all axes, as this controls the angle of the POD Point. It is also very important to orientate the foundation correctly, as this controls the orientation of the POD Point. If required, it is possible to stabilise the subterranean foundation by inserting suitable lengths of 5/6mm rods through pairs of holes at the top of the unit. Ensure that the underside of the mounting plate sits on the terrain's surface, failure to do this may result in difficulty in fitting and removing the access door.

Obstructing the pavement location of the POD Point and signage - in no circumstances should the width of a public footway be restored to less than 1m, preferably not less than 1.5m.

Electrical Work

Single Phase:

Each POD Point ideally needs 240V AC at 32A (two phases) or 64A (single phase).

Each side of the POD can supply 32A per door, either fed from an 80A single phase supply, 2 independent 40A single phase supplies or 2 phases of a 3 phase supply plus Neutral (40A).

NOTE: cables used must be able to handle 40A/80A fault condition for T7-S or 20A/40A for T3-S. An RCD/MCB/RCBO should be fitted at source and must factor in Discrimination, typically a 150~300mA timed delay version used.

In Fig. 4, the wiring of the POD Point's isolation box, fitted inside the unit, is shown.

In Fig. 5 different ways to supply the POD Point are illustrated.

Fig. 5 Different options for wiring of POD Point 1-phase unit.

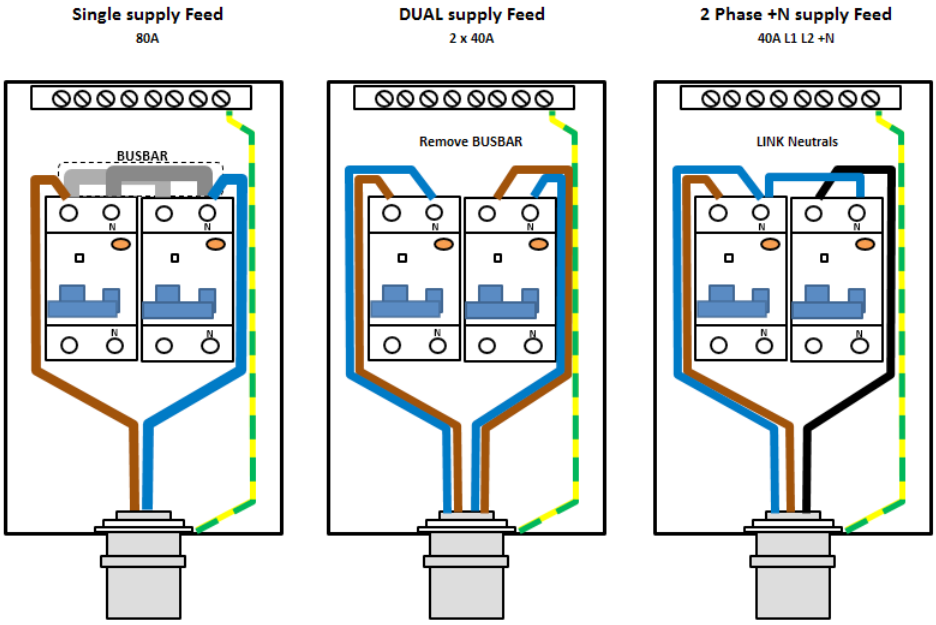

Fig. 6 Wiring of POD Point 3-phase unit.

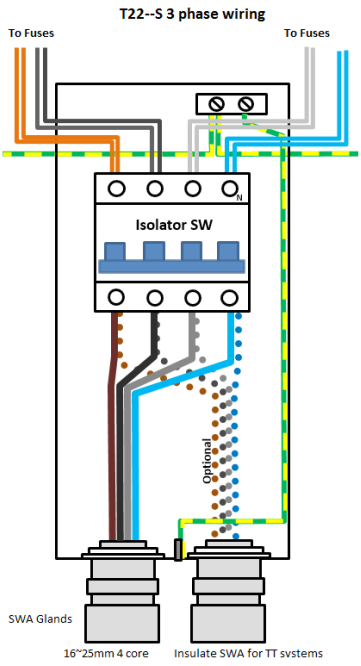

Three Phase

Each POD Point 3 phase unit needs 3-phase (3P+N*) 400 VAC at 100 A (32A per Phase). The unit should be provided with an 80A 400V 3 phase +N supply (Fig.6). Over current fuse protection is provided for inside the unit but an RCD/MCB/RCBO must be fitted at source. It is possible to de-rate the Point to 11kW/door (16A x 2 per phase) where the supply capability is not adequate. RCD should be of minimum Type A but Type B may be required for some specific customers. Type AC RCD's must NOT be used.

* (3P+N) : 3 Phases + neutral star network.

Note

Alternatively, the POD Point 3 phase unit can be supplied from 2x 32A supplies.

Contact Us

If you have any questions, comments or issues regarding POD Point Products which are not covered by this installation guide, please contact our customer support team (details below). As part of our quality and training programme calls may be recorded or monitored.

Customer Support
POD Point Limited
Discovery House, 28 – 42
London, EC1Y 8QE
Telephone: 020 7247 4114
E-mail: support@pod-point.com
Web: www.pod-point.com

Note for commisioning

If you do not have access to the App, please text the details listed below to this phone number: 07805888545

- Site operator's name
- Site operator's email address
- Site operator's phone number
- Location of the unit
- Name of the unit (e.g.: John-Mary)
- PG-number of the unit (e.g.: PG - 90001)

Earth arrangements

Electric vehicle supply equipment must be installed to BS7671 regulations, Where the charger is to be installed outside as "street furniture" the same regulations apply as if it were a lighting column, a separate earth electrode is required. A separate earth electrode is required where the charge point is located inside or on a building, i.e. a multi storey car park; where this is the case the POD Point units earth should be connected to the structure of the building and therefore in the same equipotential zone.

It is the responsibility of the installer to conduct a risk assessment of electrical or metallic items in the immediate area to a range of 10 Meters of the proposed location of the POD Point unit, If an adjacent installation (within 10 meters) has a different earthing arrangement, measures must be taken to eliminate risk of electric shock to the end user if a fault were to develop (PME neutral failure for instance). The POD Point earth shall be independent from the distributors earth system with no direct connection to the incoming supply. The SWA protective cover should be connected to the buildings structure or main earth, in almost all other installations the SWA should be insulated from the POD Point unit.

The electrical installer shall install a suitable copper rod electrode complete with appropriate CSA cable, termination housing and covers where appropriate. Earth/neutral impedance should be less than 150ohms (less than 100 preferred), POD Point unit earth to rod impedances should be less than 1ohm.

Notes

- An additional earth wire/eyelet is provided to earth the ground fixing plate
- During fixing of the rear door ensure it is earthed using the provided cable/screw

Commissioning of Twin Unit

Visit the PP Install App to commission this unit. If you do not have access to the App, see " Note for Commissioning".

Testing of Functionality

When power is turned on, lights on both sides of POD Point unit should change colours as follows:

1. Trying to get signal (takes up to 1 min) - White
2. Establishing communication with server - Magenta
3. Communication established, car not plugged - Blue with flashes of magenta

Test gun should then be plugged in to both sockets and unit functionality should be tested as follows:

1. Unlock mode - Blue with magenta flashes
2. Standby hi/low - Flashing green
3. Change hi/low - Green
4. Fault - Red with red flashes

If the test procedure fails at any stage please contact POD Point.

Appendix 10 – Accessible Toilet Alarm Equipment Schedule

Accessible Toilet Alarm System

Toilet Alarm systems (based upon an autonomous system) is compliant to BS8300:2001.

Each Stand-alone toilet designated for use by an accessible person would have an alarm system to indicate an occupant in distress.

Control & Indicating Equipment

A pull cord would initiate the system, and this would be in arms reach of a person lying on the floor.

The pull cord switch would have a reassurance light to indicate the alarm system is activated, a separate wall-mounted reset facility located adjacent to the toilet.

Activation of the alarm would give an audible and visual indication of the distress call in a public area outside of each room.

Location of Toilet Alarm Systems shall be as follows: -

Item	Equipment	Location
1	Overdoor Light & Sounder Reset/Cancel Units Pull Cords	MCC Office Accessible Toilet
2	Overdoor Light & Sounder Reset/Cancel Units Pull Cords	Biffa Office Accessible Toilet
3	Overdoor Light & Sounder Reset/Cancel Units Pull Cords	Gritter Garage Accessible Toilet

Cable / Installation

As per the specification/request, we propose to use the following cable types: -We intend to use the following cable types: -

CIRCUITS	CABLE TYPE	CORES	SIZE mm^2
Accessible Toilet Alarms	Alarm Cable (Twisted Pair)	4	1.5 (Twisted)

Power Requirements

Each 1 Zone Controller would require a 230V Supply

Equipment Schedule

MCC Office

Item	PRODUCT CODE	DESCRIPTION
1	EVX-1ZC	EVX "Assist Call" 1 Zone Controller with Combined PSU & Connection for Battery Pack
2	EVX-ODP	EVX "Assist Call" Over Door Plate SS
3	EVX-CNP	EVX "Assist Call" Cancel Plate SS
4	EVX-CPP	EVX "Assist Call" Pull Cord Plate SS
5	EVX-BAT	EVX "Assist Call" Battery Pack fits into 1ZC & PSC Plate

Biffa Office

Item	PRODUCT CODE	DESCRIPTION
1	EVX-1ZC	EVX "Assist Call" 1 Zone Controller with Combined PSU & Connection for Battery Pack
2	EVX-ODP	EVX "Assist Call" Over Door Plate SS
3	EVX-CNP	EVX "Assist Call" Cancel Plate SS
4	EVX-CPP	EVX "Assist Call" Pull Cord Plate SS
5	EVX-BAT	EVX "Assist Call" Battery Pack fits into 1ZC & PSC Plate

Gritter Garage

Item	PRODUCT CODE	DESCRIPTION
1	EVX-1ZC	EVX "Assist Call" 1 Zone Controller with Combined PSU & Connection for Battery Pack
2	EVX-ODP	EVX "Assist Call" Over Door Plate SS
3	EVX-CNP	EVX "Assist Call" Cancel Plate SS
4	EVX-CPP	EVX "Assist Call" Pull Cord Plate SS
5	EVX-BAT	EVX "Assist Call" Battery Pack fits into 1ZC & PSC Plate

Intruder Alarm System

The site has six distinct areas for access control provision these being

- MCC offices and storage
- Biffa Offices and workshop
- Sublet area
- Bin Store / Platting Shed
- Gritter Garage
- Gatehouse and Access Barriers

A Texecom Intruder Alarm Panels will be provided to control the systems along with keypad/fob setting and unsetting facilities for each of the areas

Detection is provided via dual technology movement detectors and door contacts sited to provide a confirmed alarm. Audible warning devices will be provided and each system will be connected to a Remote Central Station.

Each of the units (MCC, Sublet and Biffa) will manage their own system, allowing each system to be fully set so to provide a confirmed alarm to a remote monitoring centre.
This is in lieu of specified single system covering all the areas, which would only provide a keyholder alert of an intrusion to a unit should any of the other units still be unset.

Although the units will be individually managed, each system will be connected to the IP Network allowing the Gatehouse to monitor the system via software added to the gatehouse monitoring position.

The gatehouse will also be provided with an intrusion system, although its expected the gatehouse to be manned 24hours there are always occasions when the Gatehouse could be unmanned, at which point the system can be set to protect the high value equipment within. During manned times a Panic button will be provided for emergency events to the Central Station.

A further standalone system will be provided to the Gritter Office and welfare area. The system will be connected to gatehouse monitoring system for local monitoring and control

We have included for volumetric coverage of the void areas (for each of MCC, Biffa and Sublet areas) to cover attempts via roof lights.

We understand that the MCC Bin Store is to be used in the short term by Biffa, and we have included for connecting this area to the Biffa Office System

Intruder coverage has been provided based on the information provided offering coverage of intrusion. Particular coverage of areas within the units including zoning will need to be developed following the receipt of further information.

APPROVAL STANDARDS

Protec Fire Detection plc is a National Security Inspectorate (NSI) 'Gold' Quality Assured Accredited Company for the provision of Intruder, CCTV and Access Control Systems.

The Systems offered will be provided in line with the following industry standards specifically PD6662:2017, which is the UK equivalent of EN-50131 to Grade 3 requirements, Environmental Class 2 for Internal Products and Class 4 for External Products, together with Type EP signalling

NSI	-	Codes of Practice for Intruder Alarm Systems.
NPCC	-	National Police Chiefs Council.
EN-50131	-	European Intruder Alarm Code of Practices.
PD6662-2017	-	Code of Practice for Intruder and Hold-up Alarms.
BS8243:2010	-	Standard for confirmation of Intruder and Hold-up Alarms.

Our quotation has been based on the following provided information:

DESIGN RESPONSIBILITY

The level of Intruder coverage offered within this quotation has been determined by us and our quote is based upon supplied drawings and specifications appertaining to this enquiry. The areas, which are equipped with sequential confirmation, are shown within our Detection Circuit Specification Section.

SYSTEM USE/TESTING

Details of the set positions of the controls for range and pulse count (if used) and confirmation of any zone blanking of the lenses for all movement detectors will be recorded in the System Record at the time of commissioning of the system, and subsequently at the time of a Service Visit, if any changes are made.

The customer should note that alterations to the physical structure, building services, furniture or any stock piling at the protected location may adversely affect the area of coverage provided, and in that event the customer should liaise with the company about a re-evaluation of the security protection provided.

It is stressed that customers should CHECK the coverage afforded by all movement detectors by means of REGULAR "WALK TESTING" CHECKS between the Service Visits undertaken by the Maintenance Company.

METHOD OF SETTING

Setting of the system is a 2-stage process as per BS8243:2010 Sub Clause 6.3: the system is set using a fob at the keypad followed by the opening and closing of the Final Exit Door.

METHOD OF UNSETTING

The unsetting process as per BS8243:2010 Sub Clause 6.4.5 is started when the Final Exit Door is opened which starts the Entry Sounder and then by presenting a fob to the Intruder Keypad the system is disarmed.

Note: Please be aware that if one detector is activated off the entry route then on completion of the entry time a confirmed alarm will be generated.

ANTI MASK DETECTION

All movement detection in this quotation conforms to PD6662:2017. If a detector is covered a masked alert is generated on the Intruder Alarm Control Panel to notify the client to investigate further the cause. All alerts have to be accepted by the user to allow the system to then be set.

ENVIRONMENTAL CONSIDERATIONS

To comply with current Noise Pollution Law and PD6662:2017, all external, audible warning devices will be programmed to switch off after 15 minutes of activation (unless otherwise stated). Within 48 hours of the system coming into operation you must inform your local Police Force and Environmental Health Authority. All Internal Security Products offered within this quotation conform to current Environmental Recognised Classifications. The Internal Products such as Intruder Panels, keypads and detectors conform to Class 2 and external sounders/strobe units, roller shutter contacts conform to Class 4. All un-used packaging and waste materials are processed in line with our Company's Environmental Policy, copies of which are available upon request.

REMOTE SIGNALLING

Where the Systems are connected to a Central Station we would draw your attention to the fact that if they receive excessive False Alarm Calls (3 per 12-month period for Intruder or 2 for Personal Attack), the Police will withdraw their attendance response from your System. Information on how to avoid unwanted calls will be provided in our Operating & Maintenance System Manual. Our False Alarm Management Department will also contact you (during normal Office Hours) following an Alarm Activation to determine cause and advise corrective action if required. Please have the correct Circuit details and Alarm Location available.

EQUIPMENT SCHEDULE

MCC Office and Workshop

3	12 VOLT 17 AMP HOUR BATTERY
1	15 METRE TMD DUAL TECHNOLOGY DETECTOR - (TWIN TEC)
7	ELMDENE SURFACE CONTACT
2	ROLLER SHUTTER CONTACT
9	6 WAY JUNCTION BOX
3	SOUNDERS
3	DOUBLE PUSH PANIC BUTTON
1	1 AMP BOXED INTELLIGENT PSU
1	12 VOLT 7AMP HOUR BATTERY
1	REDCARE ULTIMATE INC. MONITORING
1	TRIGGER LEAD FROM PANEL TO COMMUNICATOR
1	88 ZONE PREMIER ELITE CONTROL PANEL C/W METAL END STATION
3	LCD PREMIER ELITE REMOTE KEYPAD C/W KEYPROX FUNCTIONALITY
4	PREMIER PROXIMITY ARMING/DISARMING TAG (PACK OF 5)
1	PREMIER 8XP 8 ZONE SYSTEM EXPANDER C/W 8 AVAILABLE ZONES
2	PREMIER 2.5 AMP POWER SUPPLY UNIT C/W EXPANDER UNIT. 8 PROGRAMMABLE ZONES
5	360 DEGREE CEILING MOUNTED DT

11	PREMIER ELITE 15 MTRE DUAL TECHNOLOGY DETECTOR C/W ANTI MASKING
1	GRADE 3 EXTERNAL SOUNDER C/W STAND BY BATTERY WHITE/BLUE LENS COVER PLATE
1	DUMMY SAB UNIT
1	IP COMMS BOARD
10	LONG RANGE DT DETECTOR

Biffa Offices and Workshop

1	12 VOLT 17 AMP HOUR BATTERY
2	15 METRE TMD DUAL TECHNOLOGY DETECTOR - (TWIN TEC)
5	ELMDENE SURFACE CONTACT
6	ROLLER SHUTTER CONTACT
11	6 WAY JUNCTION BOX
1	SOUNDERS
1	DOUBLE PUSH PANIC BUTTON
1	1 AMP BOXED INTELLIGENT PSU
1	12 VOLT 7AMP HOUR BATTERY
1	REDCARE ULTIMATE INC. MONITORING
1	TRIGGER LEAD FROM PANEL TO COMMUNICATOR
1	88 ZONE PREMIER ELITE CONTROL PANEL C/W METAL END STATION
1	LCD PREMIER ELITE REMOTE KEYPAD C/W KEYPROX FUNCTIONALITY
2	PREMIER PROXIMITY ARMING/DISARMING TAG (PACK OF 5)
2	PREMIER 8XP 8 ZONE SYSTEM EXPANDER C/W 8 AVAILABLE ZONES
1	PREMIER 2.5 AMP POWER SUPPLY UNIT C/W EXPANDER UNIT. 8 PROGRAMMABLE ZONES,
2	360 DEGREE CEILING MOUNTED DT
5	PREMIER ELITE 15 MTRE DUAL TECHNOLOGY DETECTOR C/W ANTI MASKING
1	GRADE 3 EXTERNAL SOUNDER C/W STAND BY BATTERY WHITE/BLUE LENS COVER PLATE
1	DUMMY SAB UNIT
1	IP COMMS BOARD
8	LONG RANGE DT DETECTOR

Sublet Unit

1	12 VOLT 17 AMP HOUR BATTERY
1	15 METRE TMD DUAL TECHNOLOGY DETECTOR - (TWIN TEC)
2	ELMDENE SURFACE CONTACT
2	ROLLER SHUTTER CONTACT
4	6 WAY JUNCTION BOX
1	SOUNDERS
1	1 AMP BOXED INTELLIGENT PSU

1	12 VOLT 7AMP HOUR BATTERY
1	REDCARE ULTIMATE INC. MONITORING
1	TRIGGER LEAD FROM PANEL TO COMMUNICATOR
1	24 ZONE PREMIER ELITE CONTROL PANEL C/W METAL END STATION
1	LCD PREMIER ELITE REMOTE KEYPAD C/W KEYPROX FUNCTIONALITY
1	PREMIER PROXIMITY ARMING/DISARMING TAG (PACK OF 5)
2	PREMIER 8XP 8 ZONE SYSTEM EXPANDER C/W 8 AVAILABLE ZONES
4	PREMIER ELITE 15 MTRE DUAL TECHNOLOGY DETECTOR C/W ANTI MASKING
1	GRADE 3 EXTERNAL SOUNDER C/W STAND BY BATTERY WHITE/BLUE LENS COVER PLATE
1	DUMMY SAB UNIT
1	IP COMMS BOARD
8	LONG RANGE DT DETECTOR

Gatehouse

1	12 VOLT 17 AMP HOUR BATTERY
1	15 METRE TMD DUAL TECHNOLOGY DETECTOR - (TWIN TEC)
1	ELMDENE SURFACE CONTACT
1	6 WAY JUNCTION BOX
1	SOUNDERS
1	1 AMP BOXED INTELLIGENT PSU
1	12 VOLT 7AMP HOUR BATTERY
1	REDCARE ULTIMATE INC. MONITORING
1	TRIGGER LEAD FROM PANEL TO COMMUNICATOR
1	24 ZONE PREMIER ELITE CONTROL PANEL C/W METAL END STATION
1	LCD PREMIER ELITE REMOTE KEYPAD C/W KEYPROX FUNCTIONALITY
1	PREMIER PROXIMITY ARMING/DISARMING TAG (PACK OF 5)
1	DOUBLE PUSH PANIC BUTTON
1	PREMIER ELITE 15 MTRE DUAL TECHNOLOGY DETECTOR C/W ANTI MASKING
1	GRADE 3 EXTERNAL SOUNDER C/W STAND BY BATTERY WHITE/BLUE LENS COVER PLATE
1	DUMMY SAB UNIT
1	IP COMMS BOARD

Gritter Office and Welfare

1	12 VOLT 17 AMP HOUR BATTERY
1	15 METRE TMD DUAL TECHNOLOGY DETECTOR - (TWIN TEC)
2	ELMDENE SURFACE CONTACT
2	6 WAY JUNCTION BOX
1	SOUNDERS
1	24 ZONE PREMIER ELITE CONTROL PANEL C/W METAL END STATION
1	LCD PREMIER ELITE REMOTE KEYPAD C/W KEYPROX FUNCTIONALITY
1	PREMIER PROXIMITY ARMING/DISARMING TAG (PACK OF 5)
1	DOUBLE PUSH PANIC BUTTON
1	PREMIER ELITE 15 MTRE DUAL TECHNOLOGY DETECTOR C/W ANTI MASKING
1	GRADE 3 EXTERNAL SOUNDER C/W STAND BY BATTERY WHITE/BLUE LENS COVER PLATE
1	IP COMMS BOARD

INTRODUCTION

The Texecom 24 and 88 Intruder Alarm Control Systems has been designed to suit medium to large commercial applications. It can be expanded up to 24 (Texecom 24) and 88 (Texecom 88) individual detection/monitoring zones. The system is capable of “up” and “down” line loading allowing remote programming and interrogation via the telephone line and a PC connection.

Complex site requirements such as multi-ward setting can be achieved as the system is capable of being broken down 2 (Texecom 24) and 8 (Texecom 88) separately controlled groups so that the premises or parts of the premises can be controlled independently.

The Texecom Control Panel is a true multi-tasking system, which allows multiple users operating the system simultaneously.

The panel has the capability to comply with the requirements of PD6662:2010 Grade 3 standard.

CONTROL PANEL

The Control Panel is the central processing unit for the system, it has a power supply and connections for a standby battery and has the following features:

- 8 onboard zones
- 9 onboard outputs
- 2.5 Amp Integrated PSU

REMOTE KEYPADS

Up to 2 (Texecom 24) and 8 (Texecom 88) Remote Keypads can be connected when directly wired to the network.

The Premier Elite Keypad has a 32-character LCD display, and incorporates two DP or EOL zones and one output, for a local speaker. The keypad has an integrated proximity tag reader, which allows the system to be set and unset by use of a proximity tag.

EXPANSION DEVICE

The following devices have been utilised for expanding the system:

8 Zone Expanders

The Premier Elite 8XP provides zone and output expansion for the Texecom System:

- 8 fully programmable Zones
- 8 programmable outputs
- 1auxilary input
- Speaker driver output with programmable volume control
- Tamper protection

Premier Elite PSU200XP

- This Unit has the same features of the Premier Elite 8XP, together with the advantage of a built-in 2.5A switch mode power supply.

CONTROL EQUIPMENT SPECIFICATION

MCC Offices and workshop

Control Panel: Texecom Premier Elite 88 sited: - MCC Plant Area

Keypad Locations:

Keypad 1: located Main Entrance
Keypad 2: located Secondary Entrance
Keypad 3: located Side “Car park” entrance

Detection Circuit Specification

The level of detection coverage offered is detailed upon the drawings returned with our system quotation.

Panic Alarm Buttons

The ‘multiple action/push’ panic alarm buttons will be installed in the following locations: -

a) Reception (TBC)

Will comply with BS8243:2010 and will be sequentially confirmed.

Confirmation Technology (Sequential)

The following areas of the premises are equipped with ‘Confirmation Technology’ utilising the detection devices stated: -

Room/Area	**Confirmation Type**	**Devices Fitted**
External entrance /Exits	Sequential	DT Detector and Door Contact
Vehicle Roller Shutter	Sequential	Twin Tec Detector and Roller shutter contact
Wicker gate within roller shutter	Sequential	Twin Tech detector

Audible Warning

1 No external warning device with a self -contained electronic sounder and flashing light fixed to the fabric sited Front Elevation

The external self-contained sounder has an independent re-chargeable battery power supply which will operate when there is interference with the normal connections between this unit and the control panel.

Internal warning devices, which mimic the Intruder alarm tones, will be sited in the following locations: -

1. Adjacent Keyprox

BIFFA Workshop

Control Panel: Texecom Premier Elite 88 sited: - Biffa server Room

KEYPAD LOCATIONS:

Keypad 1: located Final Entry / Exit (Office arrival Entrance) TBC

Detection Circuit Specification

The level of detection coverage offered is detailed upon the drawings returned with our system quotation.

Panic Alarm Buttons

The ‘multiple action/push’ panic alarm buttons will be installed in the following locations: -

a) Reception

Will comply with BS8243:2010 and will be sequentially confirmed.

Confirmation Technology (Sequential)

The following areas of the premises are equipped with ‘Confirmation Technology’ utilising the detection devices stated: -

Room/Area	**Confirmation Type**	**Devices Fitted**
External entrance /Exits	Sequential	DT Detector and Door Contact
Vehicle Roller Shutter	Sequential	Twin Tec Detector and Roller shutter contact
Wicker gate within roller shutter	Sequential	Twin Tech detector

Audible Warning

1 No external warning device with a self -contained electronic sounder and flashing light fixed to the fabric sited Front Elevation

The external self-contained sounder has an independent re-chargeable battery power supply which will operate when there is interference with the normal connections between this unit and the control panel.

Internal warning devices, which mimic the Intruder alarm tones, will be sited in the following locations: -

1. Adjacent Keyprox

Sublet Area

Control Panel: Texecom Premier Elite 24 sited:- Suitable Sublet area

KEYPAD LOCATIONS:

Keypad 1: located Final Entry / Exit

Detection Circuit Specification

The level of detection coverage offered is detailed upon the drawings returned with our system quotation.

Panic Alarm Buttons

The ‘multiple action/push’ panic alarm buttons will be installed in the following locations: -

a) Reception

Will comply with BS8243:2010 and will be sequentially confirmed.

Confirmation Technology (Sequential)

The following areas of the premises are equipped with ‘Confirmation Technology’ utilising the detection devices stated: -

Room/Area	**Confirmation Type**	**Devices Fitted**
External entrance /Exits	Sequential	DT Detector and Door Contact
Vehicle Roller Shutter	Sequential	Twin Tec Detector and Roller shutter contact
Wicker gate within roller shutter	Sequential	Twin Tech detector

Audible Warning

1 No external warning device with a self -contained electronic sounder and flashing light fixed to the fabric sited Front Elevation

The external self-contained sounder has an independent re-chargeable battery power supply which will operate when there is interference with the normal connections between this unit and the control panel.

Internal warning devices, which mimic the Intruder alarm tones, will be sited in the following locations: -

1. Adjacent Keyprox

Gatehouse

Control Panel: Texecom Premier Elite 24 sited: - Adjacent entrance

KEYPAD LOCATIONS:

Keypad 1: located Final Entry / Exit

Detection Circuit Specification

The level of detection coverage offered is detailed upon the drawings returned with our system quotation.

Panic Alarm Buttons

The ‘multiple action/push’ panic alarm buttons will be installed in the following locations: -

a) Control / Seating position

Will comply with BS8243:2010 and will be sequentially confirmed.

Confirmation Technology (Sequential)

The following areas of the premises are equipped with ‘Confirmation Technology’ utilising the detection devices stated: -

Room/Area	**Confirmation Type**	**Devices Fitted**
External entrance /Exits	Sequential	DT Detector and Door Contact

Audible Warning

1 No external warning device with a self -contained electronic sounder and flashing light fixed to the fabric sited Front Elevation

The external self-contained sounder has an independent re-chargeable battery power supply which will operate when there is interference with the normal connections between this unit and the control panel.

Internal warning devices, which mimic the Intruder alarm tones, will be sited in the following locations: -

1. Adjacent Keyprox

Gritter Office and Welfare

Control Panel: Texecom Premier Elite 24 sited: - Office

Keypad Locations:

Keypad 1: located Main Entrance

Detection Circuit Specification

The level of detection coverage offered is detailed upon the drawings returned with our system quotation.

Panic Alarm Buttons

The 'multiple action/push' panic alarm buttons will be installed in the following locations: -

a) Office

Will comply with BS8243:2010 and will be sequentially confirmed.

Confirmation Technology (Sequential)

The following areas of the premises are equipped with 'Confirmation Technology' utilising the detection devices stated: -

Room/Area	**Confirmation Type**	**Devices Fitted**
External entrance /Exits	Sequential	Twin tec and Door Contact

Audible Warning

1 No external warning device with a self -contained electronic sounder and flashing light fixed to the fabric sited Front Elevation

The external self-contained sounder has an independent re-chargeable battery power supply which will operate when there is interference with the normal connections between this unit and the control panel.

Internal warning devices, which mimic the Intruder alarm tones, will be sited in the following locations: -

1. Adjacent Keyprox

REMOTE SIGNALLING

A standalone Redcare GSM Transmitter will be installed to transmit Intruder Alarm Personal Attack, fault, mains fail, confirmed and open/close signals to an approved central station for each system, with Police response and actioned as agreed with the customer. This also includes the 1st years monitoring, and the arrangement of the Police Unique reference number. It is a requirement of the Police NPCC policy for the client to issue our company with a completed 'Appendix F' form and the remittance of £52.18 for each element (Intruder and/or personal attack) that you require police response for, should this facility be required.

Your attention is also drawn to fact that the Police will only attend site upon receipt of a Confirmed Signal i.e. 1st Activation the Central Station will contact the Keyholder only and only inform the Police if a secondary device is triggered. Your attention is also drawn to the fact that confirmation technology is isolated upon opening of the final exit door/circuit during the entry timer.

The areas which have 'sequential confirmation' fitted are detailed within the aforementioned detection specification, if additional detection devices are deemed necessary upon occupation we would be pleased to advise and quote these works at a later date – if required.

INSTALLATION TECHNIQUES

Each complete installation of the aforementioned Intruder Alarm Systems will be carried out by Protec employed electrical engineers in liaison with a nominated representative of the Client.

The Security System will be wired in multi-core signalling cables, routed in natural voids or roof spaces, where available.

COMMISSIONING AND SYSTEM DOCUMENTATION

The Intruder Alarm system offered will be commissioned and tested in line with current company and NSI requirements prior to full system handover. We will require the full access to the empty building for our commissioning process to ensure the correct system setting/un-setting processes are tested. Also, all 240 VAC supplies and telephone lines for remote signalling equipment (if applicable) are to be permanently energised/operational prior to the commencement of system commissioning. Delays as a result of this requirement may lead to additional costs being incurred. Copies of all electrical supply test readings undertaken by the electrical contractor are required to be issued to our nominated Project Engineer to include within our test data records.

A fully comprehensive customer manual will be issued upon system completion, which provides data for the Intruder Alarm system, detailing: -

- System Specification
- Hand Over Checklist
- Circuit Test Readings
- NSI Certificate
- Operating Instructions
- Schedule of Equipment
- False Alarm Prevention
- Log record
- 'As-fitted' Layout Drawings'

In addition to our main exclusions detailed within the General section of this quotation, the following specific items relating to the Intruder Alarm system have been excluded from our offer:

- 240 Volt AC supply to the control panel and remote PSU equipment
- Provision of ducting to remote buildings (if applicable).
- All telecommunication lines for remote signalling and remote diagnostic equipment.
- LAN and connection points to control panel Ethernet modules.

Accessible Toilet Alarm System

Toilet Alarm systems (based upon an autonomous system) is compliant to BS8300:2001.

Each Stand-alone toilet designated for use by an accessible person would have an alarm system to indicate an occupant in distress.

Control & Indicating Equipment

A pull cord would initiate the system, and this would be in arms reach of a person lying on the floor.

The pull cord switch would have a reassurance light to indicate the alarm system is activated, a separate wall-mounted reset facility located adjacent to the toilet.

Activation of the alarm would give an audible and visual indication of the distress call in a public area outside of each room.

Location of Toilet Alarm Systems shall be as follows: -

Item	Equipment	Location
1	Overdoor Light & Sounder	MCC Office Accessible Toilet
	Reset/Cancel Units	
	Pull Cords	
2	Overdoor Light & Sounder	Biffa Office Accessible Toilet
	Reset/Cancel Units	
	Pull Cords	
3	Overdoor Light & Sounder	Gritter Garage Accessible Toilet
	Reset/Cancel Units	
	Pull Cords	

Cable / Installation

As per the specification/request, we propose to use the following cable types: -We intend to use the following cable types: -

CIRCUITS	CABLE TYPE	CORES	SIZE mm^2
Accessible Toilet Alarms	Alarm Cable (Twisted Pair)	4	1.5 (Twisted)

Power Requirements

Each 1 Zone Controller would require a 230V Supply

Equipment Schedule

MCC Office

Item	PRODUCT CODE	DESCRIPTION
1	EVX-1ZC	EVX "Assist Call" 1 Zone Controller with Combined PSU & Connection for Battery Pack
2	EVX-ODP	EVX "Assist Call" Over Door Plate SS
3	EVX-CNP	EVX "Assist Call" Cancel Plate SS
4	EVX-CPP	EVX "Assist Call" Pull Cord Plate SS
5	EVX-BAT	EVX "Assist Call" Battery Pack fits into 1ZC & PSC Plate

Biffa Office

Item	PRODUCT CODE	DESCRIPTION
1	EVX-1ZC	EVX "Assist Call" 1 Zone Controller with Combined PSU & Connection for Battery Pack
2	EVX-ODP	EVX "Assist Call" Over Door Plate SS
3	EVX-CNP	EVX "Assist Call" Cancel Plate SS
4	EVX-CPP	EVX "Assist Call" Pull Cord Plate SS
5	EVX-BAT	EVX "Assist Call" Battery Pack fits into 1ZC & PSC Plate

Gritter Garage

Item	PRODUCT CODE	DESCRIPTION
1	EVX-1ZC	EVX "Assist Call" 1 Zone Controller with Combined PSU & Connection for Battery Pack
2	EVX-ODP	EVX "Assist Call" Over Door Plate SS
3	EVX-CNP	EVX "Assist Call" Cancel Plate SS
4	EVX-CPP	EVX "Assist Call" Pull Cord Plate SS
5	EVX-BAT	EVX "Assist Call" Battery Pack fits into 1ZC & PSC Plate

Appendix 11 – Induction Loop Equipment Schedule

Induction Loop System

The systems proposed are Induction Loop and Infra-Red Hearing Enhancement Systems for the Hard of Hearing.

1) Office Facility Ground Floor Reception Desk – Cross-Counter Induction Loop System,
2) Office Facility Ground Floor Meeting/ Training Room – Room Induction Loop System,

Cross-Counter Induction Loop Systems - Comprise of:

- 1No Induction Loop Amplifier, mounted under the desk on the staff side,
- 1No Microphone Unit, mounted so as to pick up the speech of staff and enough cable to form a loop onthe underside of the desk.

Operation - A hearing aid wearer wishing to utilize the system must firstly switch their ear piece to the 'T' position, secondly, they must make sure they are within a one meter radius to where the system is installed. Once both these criteria have been met the hearing aid wearer will be able to clearly hear the speech of staff at thecounter, broadcast via the suitably positioned microphone unit.

Room Induction Loop Systems - Comprise of:

- Induction Loop Amplifier(s).
- Line level input (2 Phono sockets on a single gang plate).
- Copper foil tape laid beneath the final flooring finish in the area to be covered.
- Cable within a PVC Conduit above the suspended ceiling in the area to be covered.

Operation - A hearing aid wearer wishing to utilize the system must firstly switch their ear piece to the 'T' position, secondly, they must make sure they are within the area covered by the induction loop. Once both these criteria have been met the hearing aid wearer will be able to clearly hear any sound within the area covered, picked up via the suitably positioned microphone(s) and/or 3rd party audio sources (CD Player, Presentation System etc. – By others) connected to the line level input plate.

EQUIPMENT SCHEDULE

Item	Product Code	Product Description
1	SP2960	CLD001CD Cross-Counter Induction Loop Kit
2	SP1127	CLS001 Wall Mounted Loop Amplifier
3	SP10021	Phone Input Plate (APL outreach)
4	SP2975	APV PSU for outreach plates

Cable / Installation

The induction loop wiring will be carried out using suitably approved cables and will be fixed in a neat and tidy manner andsecured with manufacturer's purpose made accessories.

All line level input cabling will be carried out using a screened multi-core cable

All microphone cabling will be carried out using a screened multicore cable

Microphone cables must be separated from any other cables by a minimum of 300mm in accordance with BS 6259.

All master to slave infra-red radiator cabling will be carried out using a 50 Ohm coaxial cable.

Appendix 12 – Access Control & Intercom Equipment Schedule

Access Control & Intercom System

The site has six distinct areas for access control provision these being

- MCC offices and storage
- Biffa Offices and workshop
- Sublet area
- Bin Store / Platting Shed
- Gritter Garage
- Gatehouse and Access Barriers

Management of the above areas will be controlled by the gatehouse although local control will also be via MCC and Biffa entrance points.

The proposed system complies with NSI Codes of Practice namely NCP 109, the System is classed as Class 2B System deemed low to medium risk and access will only be granted following the presentation of a valid unique token to a reader.

For all access controlled doors and equipment locations refer to Series 07 - Security layout drawings

The system is based on Paxton manufacturer

Read-in only proximity readers (Mifare type reader) have been provided, along with magnetic locking devices, monitoring contacts for door forced alarm and egress button/emergency break glass units for exit rights.

System control and programming is undertaken via the PC provided as part of the CCTV system at the gatehouse.

A ‘server’ PC will also be provided within the MCC Office (Server room) together with required level software.

200 access cards provided initially.

Cable / Installation

The Access Control System IP enabled will be wired in multi-core signaling type cables and Cat5e type network cabling.

Active equipment is provided as part of the CCTV system.

Cables will be clipped to trays/enclosed in designated trunking and routed in natural voids or roof spaces where available. Specialist access equipment to any high level works, if required, should be made available for Protec use.

Intercom - Video Entry

Video intercom panels have been provided to the following

Entrance Barrier (In) Dual Height
Entrance Barrier (Out) Dual Height
MCC Main Entrance
Biffa Visitor Entrance

Intercom handsets are provided at

Gatehouse
MCC Reception (TBC)
Biffa Reception

Item	DESCRIPTION
1	IP NET2+ 1DR ACU 2A PSU P/BX
2	NET2 D/TOP READER USB
3	P50 MIFARE READER
4	MIFARE READER CARD
5	NET2 ENTRY SURFACE MOUNT WITH RAIN HOOD
6	NET2 ENTRY MONITOR
7	NET2 ENTRY MONITOR DESK STAND
8	NET2 ENTRY CONTROL UNIT
9	PC AND MONITOR FOR PROGRAMMING AND OPERATION OF SYSTEM
10	PAXTON ACCESS S/WARE NET2 PRO
11	STANDARD MAGLOCK 12/24V UNMONITORED
12	STANDARD DOUBLE MAGLOCK 12/24V UNMONITORED
13	ZL BRACKET SET FOR STANDARD MAGLOCK
14	SOLENOID MORTICE BOLT 12/24 VDC FAIL UNLOCK DUAL MONITORED
15	FLUSH S/STEEL DOMED 'PRESS TO EXIT' EGRESS RELEASE
16	RESETTABLE DOUBLE POLE GREEN BREAK GLASS SURFACE
17	DOOR CONTACT
18	6 WAY JUNCTION BOX
19	12VDC 1 AMP POWER SUPPLY (BOXED)
20	12 VOLT 7 AMP HOUR BATTERY
21	DUAL HEIGHT PEDESTAL STAINLESS STEEL
22	SINGLE HEIGHT PEDESTRIAN PEDESTAL

Appendix 13 – Intruder Alarm System Equipment Schedule

Intruder Alarm System

The site has six distinct areas for access control provision these being

- MCC offices and storage
- Biffa Offices and workshop
- Sublet area
- Bin Store / Platting Shed
- Gritter Garage
- Gatehouse and Access Barriers

The Intruder alarm system is in line with Grade 3 requirements, Environmental Class 2 for Internal Products and Class 4 for External Products, together with Type EP signaling

The Control Panel is the central processing unit for the system, it has a power supply and connections for a standby battery and has the following features:

- 8 onboard zones
- 9 onboard outputs
- 2.5 Amp Integrated PSU

A Texecom Elite 88/24 Intruder Alarm Panels shall be provided to control the systems along with keypad/fob setting and unsetting facilities for each of the areas.

Panel Location	Proposed Coverage Area	Proposed Coverage Area
MCC Offices and Storage	Control Panel: Texecom Premier Elite 88 sited: - MCC Plant Area	Keypad 1: Main Entrance Keypad 2: Secondary Entrance Keypad 3: Side “Car park” entrance
BIFFA Workshop	Control Panel: Texecom Premier Elite 88 sited: - Biffa server Room	Keypad 1: Final Entry / Exit (Office arrival Entrance) TBC
Sublet Area	Control Panel: Texecom Premier Elite 24 sited:- Suitable Sublet area	Keypad 1: Final Entry / Exit
Gatehouse	Control Panel: Texecom Premier Elite 24 sited: - Adjacent entrance	Keypad 1: Final Entry / Exit
Gritter Garage	Control Panel: Texecom Premier Elite 24 sited: - Office	Keypad 1: Main Entrance

Detection is provided via dual technology movement detectors and door contacts sited to provide a confirmed alarm. Audible warning devices will be provided and each system will be connected to a Remote Central Station.

Each of the units (MCC, Sublet and Biffa) will manage their own system, allowing each system to be fully set so to provide a confirmed alarm to a remote monitoring centre.

This is in lieu of specified single system covering all the areas, which would only provide a key holder alert of an intrusion to a unit should any of the other units still be unset.

Although the units will be individually managed, each system will be connected to the IP Network allowing the Gatehouse to monitor the system via software added to the gatehouse monitoring position.

The gatehouse will also be provided with an intrusion system, although it is expected the gatehouse to be manned 24hours there are always occasions when the Gatehouse could be unmanned, at which point the system can be set to protect the high value equipment within. During manned times a Panic button will be provided for emergency events to the Central Station.

Volumetric coverage of the high level roof void areas has been included to cover attempts via roof lights.

ANTI MASK DETECTION

If a detector is covered a masked alert shall be generated on the Intruder Alarm Control Panel to notify the client to investigate further the cause. All alerts have to be accepted by the user to allow the system to then be set.

All movement detection shall conform to PD6662:2017.

EQUIPMENT SCHEDULE

MCC Office and Workshop

1 12 VOLT 17 AMP HOUR BATTERY
2 15 METRE TMD DUAL TECHNOLOGY DETECTOR - (TWIN TEC)
3 ELMDENE SURFACE CONTACT
4 ROLLER SHUTTER CONTACT
5 6 WAY JUNCTION BOX
6 SOUNDERS
7 DOUBLE PUSH PANIC BUTTON
8 1 AMP BOXED INTELLIGENT PSU
9 12 VOLT 7AMP HOUR BATTERY
10 REDCARE ULTIMATE INC. MONITORING
11 TRIGGER LEAD FROM PANEL TO COMMUNICATOR
12 88 ZONE PREMIER ELITE CONTROL PANEL C/W METAL END STATION
13 LCD PREMIER ELITE REMOTE KEYPAD C/W KEYPROX FUNCTIONALITY
14 PREMIER PROXIMITY ARMING/DISARMING TAG (PACK OF 5)
15 PREMIER 8XP 8 ZONE SYSTEM EXPANDER C/W 8 AVAILABLE ZONES
16 PREMIER 2.5 AMP POWER SUPPLY UNIT C/W EXPANDER UNIT. 8 PROGRAMMABLE ZONES
17 360 DEGREE CEILING MOUNTED DT
18 PREMIER ELITE 15 MTRE DUAL TECHNOLOGY DETECTOR C/W ANTI MASKING
19 GRADE 3 EXTERNAL SOUNDER C/W STAND BY BATTERY WHITE/BLUE LENS COVER PLATE
20 DUMMY SAB UNIT
21 IP COMMS BOARD
22 LONG RANGE DT DETECTOR

Biffa Offices and Workshop

1 12 VOLT 17 AMP HOUR BATTERY
2 15 METRE TMD DUAL TECHNOLOGY DETECTOR - (TWIN TEC
3 ELMDENE SURFACE CONTAC
4 ROLLER SHUTTER CONTACT
5 6 WAY JUNCTION BOX
6 SOUNDERS
7 DOUBLE PUSH PANIC BUTTON
8 1 AMP BOXED INTELLIGENT PSU
9 12 VOLT 7AMP HOUR BATTERY
10 REDCARE ULTIMATE INC. MONITORING
11 TRIGGER LEAD FROM PANEL TO COMMUNICATOR
12 88 ZONE PREMIER ELITE CONTROL PANEL C/W METAL END STATION
13 LCD PREMIER ELITE REMOTE KEYPAD C/W KEYPROX FUNCTIONALITY
14 PREMIER PROXIMITY ARMING/DISARMING TAG (PACK OF 5)

15 PREMIER 8XP 8 ZONE SYSTEM EXPANDER C/W 8 AVAILABLE ZONES
16 PREMIER 2.5 AMP POWER SUPPLY UNIT C/W EXPANDER UNIT. 8 PROGRAMMABLE ZONES,
17 360 DEGREE CEILING MOUNTED DT
18 PREMIER ELITE 15 MTRE DUAL TECHNOLOGY DETECTOR C/W ANTI MASKING
19 GRADE 3 EXTERNAL SOUNDER C/W STAND BY BATTERY WHITE/BLUE LENS COVER PLATE
20 DUMMY SAB UNIT
21 IP COMMS BOARD
22 LONG RANGE DT DETECTOR

Sublet Unit

1 12 VOLT 17 AMP HOUR BATTERY
2 15 METRE TMD DUAL TECHNOLOGY DETECTOR - (TWIN TEC)
3 ELMDENE SURFACE CONTACT
4 ROLLER SHUTTER CONTACT
5 6 WAY JUNCTION BOX
6 SOUNDERS
7 1 AMP BOXED INTELLIGENT PSU
8 12 VOLT 7AMP HOUR BATTERY
9 REDCARE ULTIMATE INC. MONITORING
10 TRIGGER LEAD FROM PANEL TO COMMUNICATOR
11 24 ZONE PREMIER ELITE CONTROL PANEL C/W METAL END STATION
12 LCD PREMIER ELITE REMOTE KEYPAD C/W KEYPROX FUNCTIONALITY
13 PREMIER PROXIMITY ARMING/DISARMING TAG (PACK OF 5)
14 PREMIER 8XP 8 ZONE SYSTEM EXPANDER C/W 8 AVAILABLE ZONES
15 PREMIER ELITE 15 MTRE DUAL TECHNOLOGY DETECTOR C/W ANTI MASKING
16 GRADE 3 EXTERNAL SOUNDER C/W STAND BY BATTERY WHITE/BLUE LENS COVER PLATE
17 DUMMY SAB UNIT
18 IP COMMS BOARD
19 LONG RANGE DT DETECTOR

Gatehouse

1 12 VOLT 17 AMP HOUR BATTERY
2 15 METRE TMD DUAL TECHNOLOGY DETECTOR - (TWIN TEC)
3 ELMDENE SURFACE CONTACT
4 6 WAY JUNCTION BOX
5 SOUNDERS
6 1 AMP BOXED INTELLIGENT PSU
7 12 VOLT 7AMP HOUR BATTERY
8 REDCARE ULTIMATE INC. MONITORING
9 TRIGGER LEAD FROM PANEL TO COMMUNICATOR
10 24 ZONE PREMIER ELITE CONTROL PANEL C/W METAL END STATION

11 LCD PREMIER ELITE REMOTE KEYPAD C/W KEYPROX FUNCTIONALITY
12 PREMIER PROXIMITY ARMING/DISARMING TAG (PACK OF 5)
13 DOUBLE PUSH PANIC BUTTON
14 PREMIER ELITE 15 MTRE DUAL TECHNOLOGY DETECTOR C/W ANTI MASKING
15 GRADE 3 EXTERNAL SOUNDER C/W STAND BY BATTERY WHITE/BLUE LENS COVER PLATE
16 DUMMY SAB UNIT
17 IP COMMS BOARD

Gritter Office and Welfare

1 12 VOLT 17 AMP HOUR BATTERY
2 15 METRE TMD DUAL TECHNOLOGY DETECTOR - (TWIN TEC)
3 ELMDENE SURFACE CONTACT
4 6 WAY JUNCTION BOX
5 SOUNDERS
6 24 ZONE PREMIER ELITE CONTROL PANEL C/W METAL END STATION
7 LCD PREMIER ELITE REMOTE KEYPAD C/W KEYPROX FUNCTIONALITY
8 PREMIER PROXIMITY ARMING/DISARMING TAG (PACK OF 5)
9 DOUBLE PUSH PANIC BUTTON
10 PREMIER ELITE 15 MTRE DUAL TECHNOLOGY DETECTOR C/W ANTI MASKING
11 GRADE 3 EXTERNAL SOUNDER C/W STAND BY BATTERY WHITE/BLUE LENS COVER PLATE
12 IP COMMS BOARD

Cable / Installation

The Security System will be wired in multi-core signaling cables, routed in natural voids or roof spaces, where available.

Cables will be clipped to trays/enclosed in designated trunking and routed in natural voids or roof spaces where available. Specialist access equipment to any high level works, if required, should be made available for Protec use.

Volume 3 – General Requirements

1. General Handover
2. General Maintenance

1.0 General Handover

1.1 Testing & Commissioning

The contractor shall be responsible for the testing and commissioning of the mechanical and electrical services as detailed below.

Testing;

- Provide a schedule of tests and programme for the works.
- Make arrangements for works tests for main plant.
- Provide equipment and specialists to conduct the tests.
- Arrange for the Contract Administrator to be present to witness.
- Demonstrate and verify all system functions and interfaces.
- Provide test certificates for all systems.

Commissioning;

- Agree the system settings.
- Provide a schedule of tests and programme for the works.
- Provide equipment and specialists to commission the systems.
- Arrange for the Contract Administrator to be present to witness.
- Demonstrate and verify systems meet performance criteria.
- Demonstrate and verify all system functions and interfaces.
- Provide support to alter settings during the first 12 months of operation.

Within 6-weeks of the contract works being let to the contractor he shall provide, for the agreement and approval of the contract administrator, a comprehensive commissioning dossier giving full details of all testing and commissioning to be carried out and the proposed method of recording of test information in respect of the plant and installations to be installed during the contract.

Prior to the anticipated commencement of commissioning works, the contractor shall resubmit the commissioning dossier, augmented and revised to suit any alterations or additions/deletions to the Scope of Works, which have been implemented during the contract period, for final approval of the Contract Administrator.

The testing and commissioning process carried out by the contractor must include and demonstrate the following to the Contract Administrator:

- All system and equipment tests required by legislation.
- All system and equipment tests necessary to verify that required installation quality has been achieved.
- System and equipment operating set up meets the design intent and performance parameters.

All testing and commissioning shall be carried out in accordance with British Standards, CIBSE and BSRIA Guides and with the relevant section of this document in the presence of the contract administrator, on site, and where requested at the place of manufacture. Throughout testing and commissioning the contractor shall use properly calibrated and certified instruments and apparatus supplied by the contractor.

Where test parameters are not given, results obtained equal to or better than the minimum standards set out in the British Standard shall be deemed satisfactory.

The Contract Administrator shall have access at all reasonable times to such parts of the contractor's or his sub-contractor's works as may be necessary for the purpose of inspection, examining and testing of materials, workmanship and performance of plant.

Except where stated in the specification or in the contract documents the contractor shall provide all labour, materials, power, fuel and test equipment for carrying out the tests specified tests shall be on the site and/or off site as applicable to the test specified.

The contractor shall ensure that all test equipment utilised by himself or his representatives for carrying out the tests is adequately maintained and calibrated, and carefully handled and transported.

The contractor shall give the Contract Administrator a minimum of seven days' notice of his intention to carry out tests.

The contractor shall allow for carrying out testing and commissioning of the installation in sub-sections as may be necessary for technical purpose or to suit the construction programme.

Additional tests may be carried out as requested by the Contract Administrator during the Defects Liability Period. Tests shall only be requested in this period if equipment is not performing as specified. Should it be found, after re-testing, that the acceptance test criteria has not been maintained, then any additional costs incurred shall be borne by the contractor.

Where commissioning tests are required to be carried out on specialist equipment and installations, the attendance of the Specialist Manufacturer/Installer, together with any specialist test equipment, shall be provided as part of this section of the works.

All testing and commissioning personnel shall be properly trained and competent in the use of the instruments they are using, and have a full understanding of the results.

1no electronic and 1no paper copies of Manufacturers and other Test Certificates shall be provided for all systems, plant and equipment shall be submitted to the Contract Administrator during the testing and commissioning process. Additional copies shall be incorporated in the maintenance manuals as detailed elsewhere.

1.1.1 Inspection and Tests at Manufacturer's Works

Works tests shall be carried out such that due consideration is given to the conditions under which the equipment is required to function. The test certificates shall give all details of such tests.

All plant shall be subject to inspection and/or test at the manufacturer's works, as may be required by the engineer, insurance office or other body duly appointed by the client.

1.1.2 Inspection of Equipment

The contractor shall inspect all plant and equipment immediately on delivery and shall not accept any of it which is damaged.

Any plant, equipment and accessories found to be unduly marked by tools or damaged, corroded or distorted by any cause, shall be rejected by the contract administrator and must be replaced by the contractor at his own expense.

Any damage considered repairable must be notified to the engineer for inspection before any remedial work commences. Remedial work shall only be carried out on the authority of the contract administrator.

The contractor shall be responsible for protection of his work during the execution of the contract.

1.1.4 Seasonal Commissioning

The contractor shall allow for all labour, attendance, equipment, materials, etc. to complete seasonal commissioning of the MEP services installations during the first year of occupation post construction to include testing the building services at high and low occupancy levels and under full and part load conditions.

The contractor shall include for 4no separate site visits post Taking Over in order to verify the correct operation of the building services installations during both the heating and cooling seasons.

1.1.5 Handover Documentation

For handover, the contractor shall be provide the documentation detailed below.

- Handover Overview
- Provide a schedule of information , documents and demonstrations and a programme for the handover process
- Provide equipment and specialists to demonstrate the systems running and operation of the systems
- Provide pre handover client demonstration and instruction
- Provide a Building User Guide
- Provide Operation and Maintenance manuals
- Provide record drawings of the installed systems
- Provide a Building Log Book
- Provide EPC certificates for the development
- Provide design and as-built Part L calculations for the development
- Provide special tools needed for maintenance
- Provide the spare parts listed this specification
- Provide post-handover client instruction and training
- Record utility meter readings

6-months prior to Taking Over of the works, or phase of the works, the contractor shall provide the following for the agreement and approval of the contract administrator:-

- A schedule of all information, documents and drawings associated with the handover process.
- A schedule of demonstrations and client/user training.
- A programme for the final submission of information, documents and drawings.
- A programme for the client/user training.
- Draft copies of all documents that will be submitted in sufficient detail to allow the Contract Administrator to appraise the quality of the final package.

1.1.6 Building User Guide

1 month before the Date of Taking Over, the Contractor shall provide two independent Building User Guides for the building; one relevant for non-technical building users and the other appropriate for the facility/maintenance manager that will operate and maintain the building.

The Building User Guide must contain the information described below:-

- Building Services Information
- Emergency Information

- Energy & Environmental Strategy
- Water Use
- Transport Facilities
- Materials & Waste Policy
- Re-fit/re-arrangement considerations
- Reporting Provision
- Training
- Links & References
- General information

The Building User Guide shall be adequately bound with suitable covers to withstand continual usage. The guide shall contain an index and be divided into appropriately titled logical sections to the Engineers approval.

The purpose of the building user guide is to provide details regarding the everyday operation of the building. The Energy Strategy Design (ESD) section of the guide shall provide guidance on the green initiatives designed into the development.

The building user guide shall provide the building manager with details how to operate the building services correctly while minimising energy use.

The guide shall assist:-

- Property managers to understand in detail what they need to do to operate the asset efficiently and to assist in the identification of further tuning that may be necessary to continuously improve performance and respond to future changes.
- Contractors to understand how to service and maintain the particular systems not only for reliable operations, but also for energy and water efficiency.
- Occupants to understand any limitations that they must work within to maintain the design performance.
- Future effective fit out/refurbishments streamlining the building owner approvals for the building to conform to the relevant regulations applicable at the time.
- The costs associated with the production of the Building User Guide shall be separately identified within the contractor's tender return.

1.1.7 Operation and Maintenance Instructions

Two weeks before the Date of Taking Over, the Contractor shall provide 1no electronic and 1no paper copy sets of Operating and Maintenance Instructions for all the installations included in the Contract.

These sets shall be adequately bound with board covers to withstand continual usage using a binder system which permits information to be removed for upgrading and allows new information to be added. The manuals shall contain an index and be divided into appropriately titled logical sections to the Contract Administrators approval.

Each set shall incorporate a detailed description of the operating procedures for each installation and item of equipment, together with details of the regular maintenance routines recommended by the Manufacturer of each item of equipment, together with typical fault finding routes and a description of emergency action which should be taken in the event of breakdown of equipment. In addition, for reach item of equipment, a list of spare parts shall be given which the manufacturers recommended should be kept in store.

The manuals and instructions shall contain, though not be limited by the following information:-

1.1.7.1 Record Drawings

The Contractor shall provide, before the Date of Taking Over 1no paper copy. In addition the contractor shall provide an electronic copy containing the drawings fully compatible with the latest version of AutoCAD to BS 1192.

The "As Installed" drawings shall show the following:

- 1:100 or 1:50 scale layout drawings and a system diagram of the complete installation.
- The system diagrams shall record the values within the installation where appropriate.
- The detailed layout of the internal and external plant rooms and areas showing where appropriate all existing as well as those items installed under this Contract. The schematic diagrams of all circuits including control circuits showing switchgear, cable, fuse type, size and reference.
- Equipment and distribution schedules.
- Manufacturer drawings showing the arrangement and assembly of component parts of all machines and any piece of equipment which may need servicing.
- Diagrams illustrating the principles of operation of automatic controls and of instrumentation, present in combination with any foregoing item.
- Manufacturer's internal wiring diagrams for each piece of electrical equipment supplied under the Sub-Contract, together with physical arrangement drawings where necessary to locate and identify the component parts.
- The nature and position of all component parts of the earthing associated with each system.
- Interface details with existing equipment or equipment installed separately from these works.

1no electronic and 2no paper copy of each "As Installed" drawing shall be issued to the Contract administrator for approval prior to final issue.

The Contractor shall also supply and fix in the incoming gas meter room:

Notices regarding the gas installation.

Schematic layout of internal gas pipework within the building, including locations of isolation points.

The Contractor shall also supply and fix in the main switchroom:

- Notices regarding the electrical installation.
- Instructions in the form prescribed by HM Stationery Office as to the treatment of persons suffering from electric shock.
- HMSO Form F954 Electricity.
- Poster 117 First Aid in Emergency.
- Health and Safety Poster.
- Schematic Wiring Diagram of Mains Distribution.

The Contractor shall also provide and fix type written circuit lists for every distribution board. These shall be enclosed in folders of sheets of transparent non-flammable material, and fixed inside the distribution board.

The Contractor shall provide reproduced "A3" size copies of all Record Drawings, perforated and incorporated in rigid loose leaf type bindings with protective coverings, for inclusion in the Operating and Maintenance Manuals.

1.1.8 Building Log Book

The contractor shall provide the client with a building log book which details the building services plant and controls. The log book shall detail the method of operation and maintenance of the plant and other details that enable energy consumption to be monitored and controlled in accordance with Approved Document L of the Building Regulations.

The building log book shall be produced in accordance with CIBSE TM31 'Building Log Book Toolkit' and shall include all associated commissioning reports, energy metering strategy, schematic diagrams, etc.

The contractor shall provide a draft copy of the building log book 4-weeks prior to handover for comment by the engineer.

1no. digital and 1no paper copies of the final draft shall be issued to the client at handover.

The costs associated with the production of the Building Log Book shall be separately identified within the contractor's tender return.

1.1.9 EPC Certificates

The contractor shall provide the client with an Energy Performance Certificate for the development prior to Taking Over.

The EPC certificates shall be based on the as installed mechanical and electrical services, as-built fabric constructions and final air permeability values.

The contractor shall provide draft copies of all Energy Performance Certificates 4-weeks prior to handover for comment by the Engineer. The energy performance certificates shall be produced by an energy assessor who is accredited by a government approved accreditation scheme relevant to the complexity of the development and MEP services design. The accreditation details of the energy assessor shall be submitted to the Engineer at the same time as the draft copies of the energy performance certificates.

Upon acceptance of the final energy performance certificates at Taking Over, each certificate shall be lodged by the energy assessor on to the Non-Domestic Energy Performance Certificate Register, operated by Landmark Information Group. Once the certificates have been successfully registered, the contractor shall provide each certificate Report Reference Number to the Client and the Engineer complete with the original and 1no electronic copy and 1no paper copy of the EPC certificates at handover.

The costs associated with the production of the Energy Performance Certificates shall be separately identified within the contractor's tender return.

1.2 Mechanical Commissioning Certificates

The contractor shall provide the following commissioning certificates, as a minimum, to the Building Services Consultant for review 4 weeks prior to handover:

Gas Fired Radiant Heating System

- Provide manufacturer commissioning certification
- Provide written confirmation that the systems are working correctly

Comfort Cooling & Heating Systems

- Provide pipework pressure testing certificate
- Provide condensate drainage flush & fill test certificate
- Provide comfort cooling manufacturer monthly interim inspection reports
- Provide comfort cooling manufacturer's final health check certification
- Provide comfort cooling manufacturer's extended warranty confirmation
- Provide written confirmation that the systems are working correctly

Specialist Lab Room Air Conditioning Systems

- Provide pipework pressure testing certificate
- Provide condensate drainage flush & fill test certificate
- Provide manufacturer's final health check certification
- Provide manufacturer's extended warranty confirmation
- Provide written confirmation that the systems are working correctly

Local Electric Heating Systems

- Provide temperature & timeclock set points for each panel heater
- Provide written confirmation that the systems are working correctly

Ventilation Systems

- Provide commissioning certificates (air handling units, fans etc.)
- Provide ductwork cleanliness report
- Provide ductwork air leakage/pressure test
- Provide air balance commissioning data (primary, secondary & extract measured air flow rates)
- Provide fire damper installation/activation test certificate
- Provide external noise level assessment in accordance with acousticians/planning requirements
- Provide written confirmation that the systems are working correctly

Domestic Hot & Cold Water Systems

- Provide pipework pressure testing certificate
- Provide pipework flushing method statement
- Provide chemical cleaning method statement
- Provide flushing/chlorination certificate (pipework, fittings and tanks)
- Provide water sample test certificate (chemical/bacteriological)
- Provide domestic hot water generator manufacturers commissioning certificate

- Provide commissioning details for blending valves (recorded temperatures for stored and terminal devices)
- Provide thermostatic blending valve test report
- Provide time and temperature draw off test
- Provide trace heating function & alarm certification
- Provide water leak detection commissioning report
- Provide water booster set commissioning report
- Provide compressed air system commissioning report
- Provide written confirmation that the systems are working correctly

Natural Gas Services

- Provide gas soundness test certificate
- Provide gas safety inspection report
- Provide gas safety shut off systems test certificate
- Provide written confirmation that the systems are working correctly

Automatic Controls Systems

- Provide controls specialist commissioning report
- Provide written confirmation of utility meter logging
- Provide demonstration of interfaces with comfort cooling installations
- Provide written confirmation of satisfactory functional test
- Provide written confirmation that the system is working correctly

Above Ground Drainage Systems

- Provide air test certificate
- Provide water test certificate
- Provide written confirmation that the systems are working correctly

1.3 Electrical Commissioning Certificates

Electrical Installation

- Provide electrical installation certificate
- Provide schedule of circuits and test results
- Confirm all switchgear devices are working correctly
- Confirm all switchgear has been labelled correctly

Sub Metering

- Provide commissioning certificate
- Provide schedule of meter readings (at date of handover)
- Confirm all meters are working correctly

Interior Lighting

- Provide schedule of measured lighting levels for all areas against design levels
- Confirm all luminaires and reflectors have been cleaned
- Confirm all lamps and control gear are working correctly

Exterior Lighting

- Provide schedule of measured lighting levels for all areas
- Confirm all luminaires and reflectors have been cleaned
- Confirm all lamps and control gear are working correctly

Lighting Controls

- Provide schedule of system control settings and functions
- Confirm all switching devices are working correctly
- Confirm overrun time settings for occupancy sensors
- Confirm timeclock settings for external lighting circuits

Emergency Lighting

- Provide emergency lighting completion certificate
- Provide schedule of measured lighting levels for all areas
- Confirm all lamps are working correctly
- Confirm all charge LED's are working correctly

Fire Detection and Alarm System

- Provide fire alarm installation certificate
- Provide schedule of test results including sound levels for all areas
- Provide a copy of the approved cause and effect schedule
- Provide schedule of fire alarm text / address information (to be client approved)
- Provide written confirmation that the system is working correctly

Lightning Protection System

- Provide commissioning certificate
- Provide schedule of test results

Disabled Alarm System

- Provide commissioning certificate
- Provide schedule of test results
- Provide written confirmation that the system is working correctly

CCTV System

- Provide commissioning certificate
- Provide schedule of test results
- Provide written confirmation that the system is working correctly

Access Control System

- Provide commissioning certificate
- Provide schedule of test results
- Provide written confirmation that the system is working correctly

Structured Wiring System

- Provide commissioning certificate
- Provide schedule of test results
- Provide written confirmation that the system is working correctly

Photovoltaic System

- Provide commissioning certificate
- Provide schedule of test results
- Provide written confirmation that the system is working correctly

1.4 Familiarisation & End User Training

Provide the handover information in accordance with the recommendations of BSRIA TN15/95 prior to practical completion.

Provide end user training and assistance prior to practical completion including the requirements given below.

Explain and demonstrate the building services works, O&M manuals and record drawings to the end users satisfaction.

Provide training in the form of both classroom sessions and tours of the building systems as required by BSRIA TN15/95 section 3.4.

Provide a suitable classroom environment for 10 of the end users staff with facilities for PowerPoint or other screen-based presentations for each topic area.

Allow for repeat sessions where operating staff are unavailable or cannot be released simultaneously.

Submit copies of training presentation for the end users future reference.

Keep records of the training sessions including any certificates of competence?

Record training sessions on DVD.

2.0 General Maintenance

2.1 12-Months Defects

It shall be deemed that warranty on the plant equipment and installation shall commence at the date of Taking Over of the Contract Works (Building Works and Services Installations) unless specifically otherwise agreed by the Contract Administrator in writing.

The contractor shall warrant all materials, plant, equipment and systems installed against fault, failure and incorrect or inadequate performance for a period of twelve calendar months from the date of Taking Over.

The warranty shall include all replacement parts, equipment and labour. The contractor shall allow for carrying out warranty work outside normal working hours as necessary to suit the clients operation of the building. The contractor shall provide a single point of contact for reporting faults and problems which occur on all systems.

2.2 Planned Maintenance

If indicated within the Tender documents, the contractor shall include for full maintenance of the systems during the first 12 months after the completion or phased completion of the project.

If maintenance is not included in the contract an option cost shall be provided by the contractor.

2.3 Equipment and Special Tools

One complete set of all special spanners, tools, necessary for maintaining in good order the whole of the Contract Plant and equipment shall be supplied by the Contractor together with one suitably fitted container for the Client's maintenance staff. The container shall be provided with a strong lock, for which four keys shall be supplied.

The spanners, tools, etc., supplied under this clause shall not be used during the erection of the plant, otherwise they will be rejected.

All heavy parts of plant shall be provided with some convenient means of slinging or handling during erection or overhaul, and items requiring extraordinary arrangements for removal for maintenance purposes shall be clearly identifiable, and the Client's maintenance staff instructed on the procedures required to carry out such works.

The Contractor shall allow in his tender for ensuring that all equipment which may require dismantling for normal routine maintenance purposes can be readily so done and the Contractor may be required to prove to the Contract Administrator that dismantling and re-assembling can be carried out with a minimum amount of external work.

2.4 Spares and Replacements

Spare parts shall comply with the Specification and must be suitably marked and numbered for identification and prepared for storage by greasing or painting, as appropriate, to prevent deterioration.

A list of Spares recommended for 12 months operation must be submitted by the Contractor for inclusion in the Operation and Maintenance Manual.

System	Spare Parts
Electrical	As required for 12 months maintenance
Mechanical	As required for 12 months maintenance
Ventilation	As required for 12 months maintenance
Comfort cooling/heating	As required for 12 months maintenance

2.5 Warranty and Maintenance

Guarantee the systems for a period of 12 months

Attend to faults and defects in defined response times

The warranty on the plant equipment and installation shall commence at the date of Taking Over of the Contract Works (Building Works and Services Installations) unless specifically otherwise agreed by the Contract Administrator in writing.

The contractor shall warrant all materials, plant, equipment and systems installed against fault, failure and incorrect or inadequate performance for a period of twelve calendar months from the date of Taking Over.

The warranty shall include all replacement parts, equipment and labour. The contractor shall allow for carrying out warranty work outside normal working hours as necessary to suit the clients operation of the building. The contractor shall provide a single point of contact for reporting faults and problems which occur on all systems.

The contract shall provide attendance to faults reported within the periods shown in the table below.

The contractor shall use his best endeavours to clear faults as quickly as possible. Where faults in essential systems cannot be cleared immediately the contractor shall make appropriate temporary arrangements to restore services.

All faults must be cleared within a maximum of three working days.

The contractor shall prepare and submit to the client a brief report on the circumstances of each fault and what action has been taken.

System	Maximum Response Time
Electrical	
LV main switchgear	4 hours
Power distribution	1 day
Lighting systems	1 day
Fire alarm systems	4 hours
Security CCTV systems	4 hours
Comms power	4 hours
Mechanical	
Heating	4 hours
Cooling	1 day
Ventilation	1 day
Cold water	4 hours
Hot water	1 day
Comms cooling	4 hours
Public Health	
Drainage	1 day

If specifically indicated within the tender documents, the contractor shall include maintenance of the systems in accordance with the following table.

System/Works	Mechanical Systems	Electrical Systems	Public Health	Lifts
Period	12 months	12 months	12 months	12 months
Submit maintenance schedules	✓	✓	✓	✓
Undertake planned maintenance*	✓	✓	✓	✓
Parts replacement	✓	✓	✓	✓
Consumables	✓	✓	✓	✓
Retest and commission	✓	✓	✓	✓
Submit visit report	✓	✓	✓	✓

Consumables shall include all items required under a planned maintenance programme and as filters, lamps, engine oil etc.

The contractor will be responsible for the supply and installation of spare parts and consumables where these are requested.

Volume 4 - Tender Summaries

1. Utility Services Works
2. Mechanical Services Installation
3. Electrical Services Installation

Tender Summary – Utility Services Works

Preliminaries (Inc CDM)	£.....
Diversion & Alterations	£.....
Incoming Gas Supplies	£.....
Incoming Water Supplies	£.....
Incoming Electrical Supplies	£.....
Incoming Telecoms - Openreach Duct Infrastructure	£.....
Incoming Telecoms - Virgin Media Duct Infrastructure	£.....
Incoming Telecoms - Alternative Provider Duct Infrastructure	£.....
Re-location of existing Electric Vehicle Charging Points within intended position for Winter Maintenance Building.	£.....
Sub Total	£.....
Add 1/39th MCD	£.....
Grand Total	£.....

Tender Summary – Mechanical Services Installation

Preliminaries (Inc CDM)	£.....
Incoming Water Services	£.....
Incoming Gas Services	£.....
VRF Comfort Cooling/Heating Systems	£.....
Server Room Cooling Systems	£.....
Specialist Lab Room Air Conditioning Systems	£.....
Workshop Gas Fired Radiant Heating System	£.....
Overdoor Air Curtains	£.....
Electric Heating To Ancillary Areas	£.....
General Supply & Extract Ventilation Systems	£.....
Dirty Extract Ventilation System	£.....
Vehicle Fume Extract Ventilation Systems	£.....
Domestic Hot and Cold Water Services	£.....
Domestic Hot Water Plant	£.....
Compressed Air Systems	£.....
Gas Distribution	£.....
Automatic BMS Control System	£.....
Fire Safety Systems	£.....
Above Ground Drainage Systems	£.....
Rainwater Drainage	£.....
Sanitaryware Installation	£.....
Thermal Insulation	£.....
Water Treatment	£.....
Testing and Commissioning	£.....
Part L2A Calculations/Thermal Modelling	£.....
EPC Certificates	£.....
O&M Manuals and As-Fitted Drawings	£.....
Seasonal Commissioning	£.....

Sub Total	£.....
Add 1/39th MCD	£.....
Grand Total	£.....

---

12 Months Planned Preventative Maintenance	£.....

Tender Summary – Electrical Services Installation

Preliminaries (Inc CDM)	£.....
Works Associated with Incoming LV Electrical Supply	£.....
LV Power Distribution System	£.....
General Power Installation	£.....
Specialist Systems Power	£.....
Electric Vehicle Charging Points	£.....
Earthing & Bonding	£.....
Lightning Protection System	£.....
Internal Lighting	£.....
External Lighting	£.....
Lighting Controls	£.....
Emergency Lighting	£.....
Fire Detection & Alarm System	£.....
Aspirating Fire Aspirating System	£.....
Emergency Assistance Alarm System	£.....
Hearing Enhancement Systems	£.....
Intruder Alarm System	£.....
CCTV Surveillance System	£.....
Access Control System	£.....
Intercom Entry System	£.....
Incoming Telephone Lines	£.....
ICT Structured Wiring System	£.....
Wireless Network	£.....
Clients PCs	£.....
Cabling and Containment Systems	£.....
Testing and Commissioning	£.....
O&M Manuals and As-Fitted Drawings	£.....
Sub Total	£.....

Add 1/39th MCD	£.....
Grand Total	£.....

---

12 Months Planned Preventative Maintenance	£.....

Volume 5 – Reports

1. Existing Utility Searches Report

Morgan Sindall

Hammerstone Road, Manchester
Utility Searches Report

Last Updated 31/01/19

Ref: 3694-HAN-ZZ-XX-RP-MEP-003

Hannan
Associates
MEP Design Solutions

Contents

Affected Utilities

1.0 Cadent Gas

2.0 Electricity North West

3.0 Environment Agency

4.0 Instalcom - (CenturyLink, Global Crossing, Fibernet & Fiberspan) – Telecommunications

5.0 LinesearchbeforeUdig

6.0 Manchester City Council - Council

7.0 Openreach - British Telecommunications

8.0 Sky Telecommunications

9.0 United Utilities - Water

10.0 Virgin Media - Telecommunications

11.0 Vodafone - Telecommunications

13.0 Manchester City Council - Street Lighting

Document Control

Document Authority

Prepared by	Colin Burns
Date	31/01/2019
Checked by	Steve Bartlett
Date	31/01/2019
Approved by	Philippa Spivey
Date	31/01/2019

Document History

Issue	Issue Date	Status
Issue 1	31/01/2019	For Information

1.0 Cadent Gas

ATKINS CHECKED
SM

SCALE: Not to scale

USER ID: pate6410

DATE: 08/05/2018

EXTRACT DATE: 02/03/2018

MAP REF: SJ8896

CENTRE: 388203, 396850

LP MAINS
MP MAINS
IP MAINS
LHP MAINS
NHP MAINS

Some examples of Plant Items:
Valve | Depth of Cover | Syphon | Diameter Change | Material Change

This plan shows those pipes owned by National Grid Gas plc in their role as a Licensed Gas Transporter (GT). Gas pipes owned by other GTs, or otherwise privately owned, may be present in this area. Information with regard to such pipes should be obtained from the relevant owners. The information shown on this plan is given without warranty, the accuracy thereof cannot be guaranteed. Service pipes, valves, syphons, stub connections, etc. are not shown but their presence should be anticipated. No liability of any kind whatsoever is accepted by National Grid Gas plc or their agents, servants or contractors for any error or omission. Safe digging practices, in accordance with HS(G)47, must be used to verify and establish the actual position of mains, pipes, services and other apparatus on site before any mechanical plant is used. It is your responsibility to ensure that this information is provided to all persons (either direct labour or contractors) working for you on or near gas apparatus. The information included on this plan should not be referred to beyond a period of 28 days from the date of issue. Further information on all DR4s can be determined by calling the DR4 hotline on 01455 892426 (9am-5pm) A DR4 is where a potential error has been identified within the asset record and a process is currently underway to investigate and resolve the error as appropriate.

MAPS Viewer Version 5.6.7.0

Local Machine

This plan is reproduced from or based on the OS map by National Grid Gas plc, with the sanction of the controller of HM Stationery Office. Crown Copyright Reserved.

2.0 Electricity North West

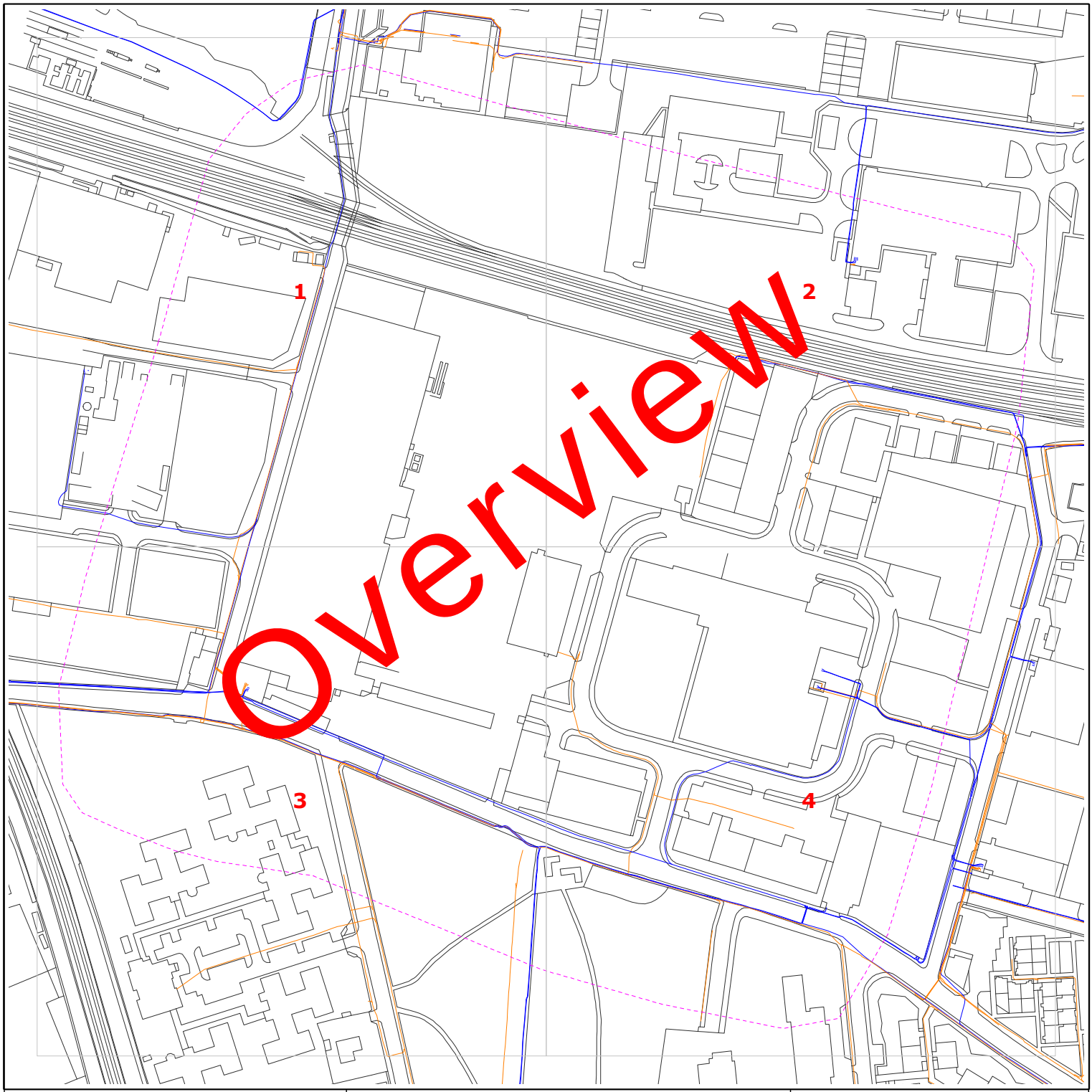

Requested by: Christina Elliott

Company: Atkins

Date Requested: 03/05/2018

Job Reference: 12764461

Your Scheme/Reference: 64875/AV

Dig Sites:

Area Line

Operating Voltage	Colour Code	Line Colour
132kV	Black	
33kV	Green	
22kV-25kV	Yellow	
11kV	Red	
6kV-6.6kV	Blue	
1kV-6kV	Violet	
LV	Orange	
Unknown Voltage	Brown	

Data Management
Electricity North West
Linley House
Dickinson Street
Manchester, M1 4LF
Phone: 0800 195 4141
Email: planrequest@enwl.co.uk

Scales on A4 paper:
1:1250 Area dig site
1:250 Line dig site

Unless otherwise indicated the depth of Electricity North West Limited cables are in accordance with NJUG (450mm for Low Voltage & 600mm for 11kV cables) 33kV and 132kV cables are laid at depths as marked. The depth and positions of Electricity North West Limited equipment was accurate as shown when the equipment was installed. However third parties may have altered the level & other reference data. Therefore Electricity North West Limited accept no responsibility for the position of Electricity North West Limited equipment being different from shown. No person, body or company, shall be relieved from liability for damage caused to Electricity North West Limited equipment by reason of being located differently to the indications on this drawing. Service cables are not necessarily shown but must be assumed to exist to all premises, streetlights and signs. There may be other Electricity North West Limited apparatus in the vicinity which is not indicated on the cable records. Other apparatus may also be present which is owned by a third party other than Electricity North West Limited.

Reproduced from or based upon Ordnance Survey's map with the permission of Her Majesty's Stationary Office. Crown Copyright Reserved. LICENCE No. 100017892. Unauthorised reproduction may lead to Prosecution or Civil Proceedings.

Reference should be made to HSE Guidance, HS(G)47 "Avoiding Danger from Underground Services" and GS6 "Avoidance of Danger from Overhead Power Lines".

Electricity North West Limited 304 Bridgewater Place, Birchwood Park, Warrington WA3 6XG. Registered in England and Wales. Registered No 02366949

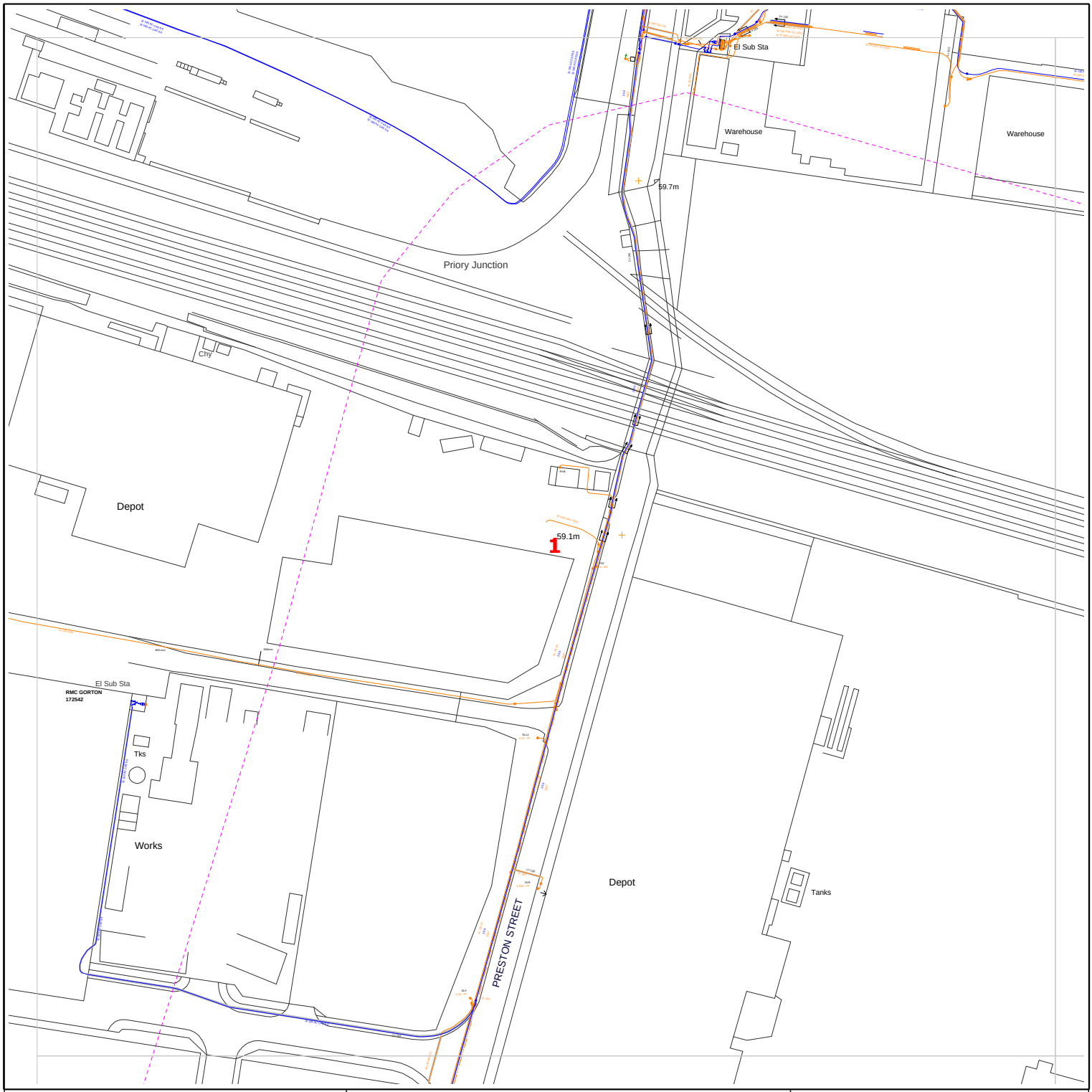

Requested by: Christina Elliott

Company: Atkins

Date Requested: 03/05/2018

Job Reference: 12764461

Your Scheme/Reference: 64875/AV

Dig Sites:

Area Line

Operating Voltage	Colour Code	Line Colour
132kV	Black	
33kV	Green	
22kV-25kV	Yellow	
11kV	Red	
6kV-6.6kV	Blue	
1kV-6kV	Violet	
LV	Orange	
Unknown Voltage	Brown	

electricity north west

Data Management
Electricity North West
Linley House
Dickinson Street
Manchester, M1 4LF
Phone: 0800 195 4141
Email: planrequest@enwl.co.uk

Scales on A4 paper:
1:1250 Area dig site
1:250 Line dig site

Unless otherwise indicated the depth of Electricity North West Limited cables are in accordance with NJUG (450mm for Low Voltage & 600mm for 11kV cables) 33kV and 132kV cables are laid at depths as marked. The depth and positions of Electricity North West Limited equipment was accurate as shown when the equipment was installed. However third parties may have altered the level & other reference data. Therefore Electricity North West Limited accept no responsibility for the position of Electricity North West Limited equipment being different from shown. No person, body or company, shall be relieved from liability for damage caused to Electricity North West Limited equipment by reason of being located differently to the indications on this drawing. Service cables are not necessarily shown but must be assumed to exist to all premises, streetlights and signs. There may be other Electricity North West Limited apparatus in the vicinity which is not indicated on the cable records. Other apparatus may also be present which is owned by a third party other than Electricity North West Limited.

Reproduced from or based upon Ordnance Survey's map with the permission of Her Majesty's Stationary Office. Crown Copyright Reserved. LICENCE No. 100017892. Unauthorised reproduction may lead to Prosecution or Civil Proceedings.

Reference should be made to HSE Guidance, HS(G)47 "Avoiding Danger from Underground Services" and GS6 "Avoidance of Danger from Overhead Power Lines".

Electricity North West Limited 304 Bridgewater Place, Birchwood Park, Warrington WA3 6XG. Registered in England and Wales. Registered No 02366949

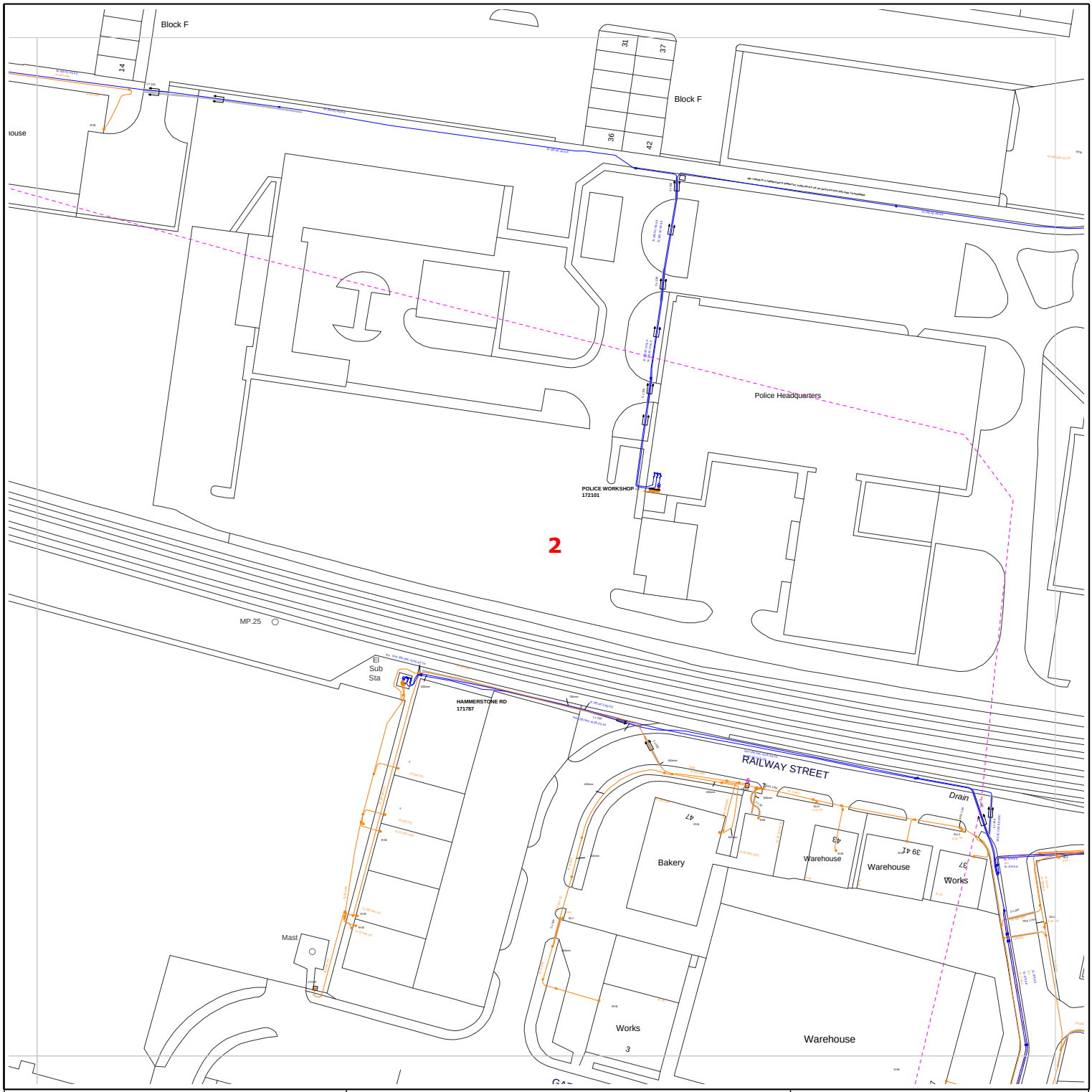

Requested by: Christina Elliott

Company: Atkins

Date Requested: 03/05/2018

Job Reference: 12764461

Your Scheme/Reference: 64875/AV

Dig Sites:

Area Line

Operating Voltage	Colour Code	Line Colour
132kV	Black	
33kV	Green	
22kV-25kV	Yellow	
11kV	Red	
6kV-6.6kV	Blue	
1kV-6kV	Violet	
LV	Orange	
Unknown Voltage	Brown	

electricity north west

Data Management
Electricity North West
Linley House
Dickinson Street
Manchester, M1 4LF
Phone: 0800 195 4141
Email: planrequest@enwl.co.uk

Scales on A4 paper:
1:1250 Area dig site
1:250 Line dig site

Unless otherwise indicated the depth of Electricity North West Limited cables are in accordance with NJUG (450mm for Low Voltage & 600mm for 11kV cables) 33kV and 132kV cables are laid at depths as marked. The depth and positions of Electricity North West Limited equipment was accurate as shown when the equipment was installed. However third parties may have altered the level & other reference data. Therefore Electricity North West Limited accept no responsibility for the position of Electricity North West Limited equipment being different from shown. No person, body or company, shall be relieved from liability for damage caused to Electricity North West Limited equipment by reason of being located differently to the indications on this drawing. Service cables are not necessarily shown but must be assumed to exist to all premises, streetlights and signs. There may be other Electricity North West Limited apparatus in the vicinity which is not indicated on the cable records. Other apparatus may also be present which is owned by a third party other than Electricity North West Limited.

Reproduced from or based upon Ordnance Survey's map with the permission of Her Majesty's Stationary Office. Crown Copyright Reserved. LICENCE No. 100017892. Unauthorised reproduction may lead to Prosecution or Civil Proceedings.

Reference should be made to HSE Guidance, HS(G)47 "Avoiding Danger from Underground Services" and GS6 "Avoidance of Danger from Overhead Power Lines".

Electricity North West Limited 304 Bridgewater Place, Birchwood Park, Warrington WA3 6XG. Registered in England and Wales. Registered No 02366949

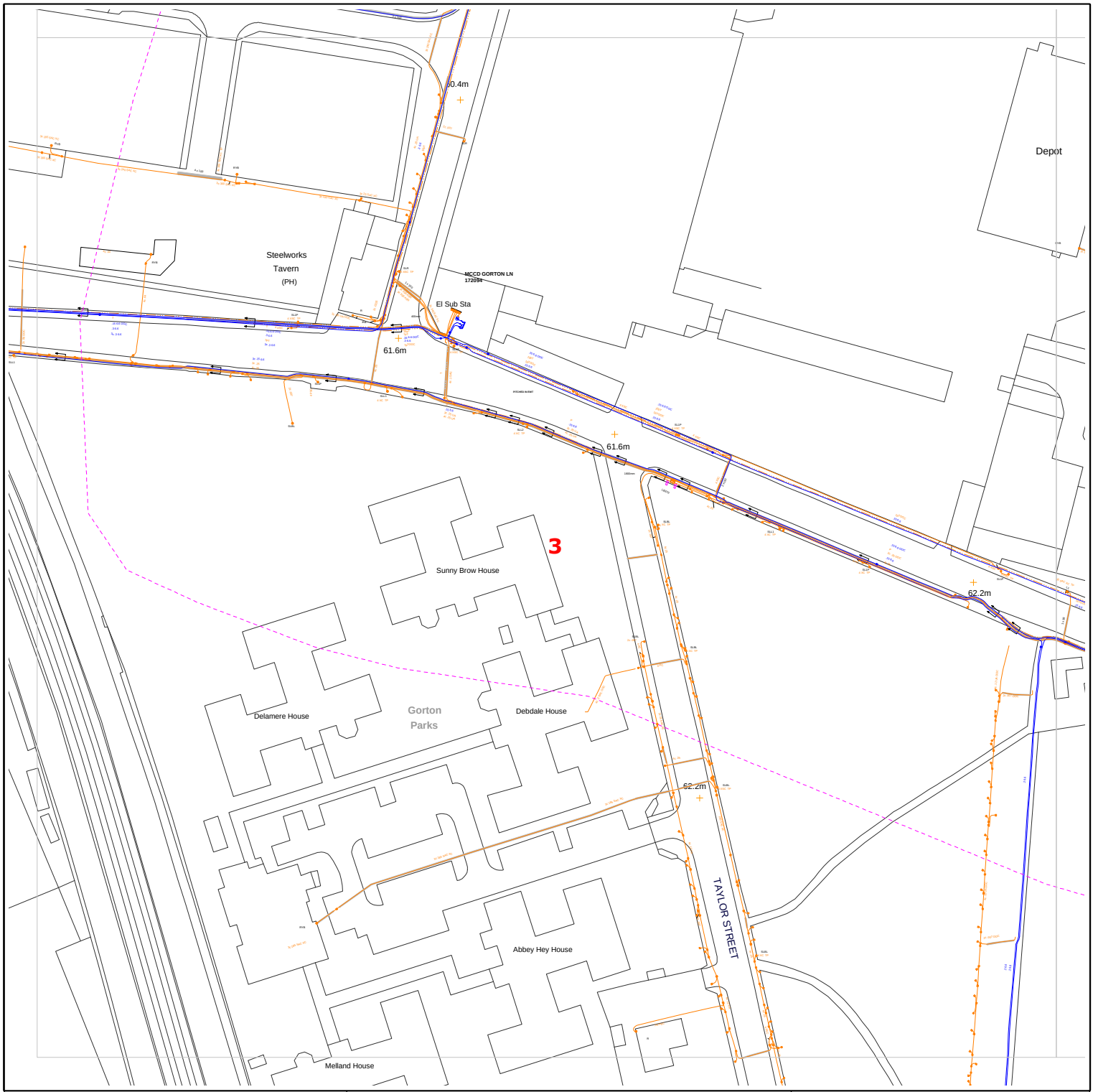

Requested by: Christina Elliott

Company: Atkins

Date Requested: 03/05/2018

Job Reference: 12764461

Your Scheme/Reference: 64875/AV

Dig Sites:

Area Line

Operating Voltage	Colour Code	Line Colour
132kV	Black	
33kV	Green	
22kV-25kV	Yellow	
11kV	Red	
6kV-6.6kV	Blue	
1kV-6kV	Violet	
LV	Orange	
Unknown Voltage	Brown	

Data Management
Electricity North West
Linley House
Dickinson Street
Manchester, M1 4LF
Phone: 0800 195 4141
Email: planrequest@enwl.co.uk

Scales on A4 paper:
1:1250 Area dig site
1:250 Line dig site

Unless otherwise indicated the depth of Electricity North West Limited cables are in accordance with NJUG (450mm for Low Voltage & 600mm for 11kV cables) 33kV and 132kV cables are laid at depths as marked. The depth and positions of Electricity North West Limited equipment was accurate as shown when the equipment was installed. However third parties may have altered the level & other reference data. Therefore Electricity North West Limited accept no responsibility for the position of Electricity North West Limited equipment being different from shown. No person, body or company, shall be relieved from liability for damage caused to Electricity North West Limited equipment by reason of being located differently to the indications on this drawing. Service cables are not necessarily shown but must be assumed to exist to all premises, streetlights and signs. There may be other Electricity North West Limited apparatus in the vicinity which is not indicated on the cable records. Other apparatus may also be present which is owned by a third party other than Electricity North West Limited.

Reproduced from or based upon Ordnance Survey's map with the permission of Her Majesty's Stationary Office. Crown Copyright Reserved. LICENCE No. 100017892. Unauthorised reproduction may lead to Prosecution or Civil Proceedings.

Reference should be made to HSE Guidance, HS(G)47 "Avoiding Danger from Underground Services" and GS6 "Avoidance of Danger from Overhead Power Lines".

Electricity North West Limited 304 Bridgewater Place, Birchwood Park, Warrington WA3 6XG. Registered in England and Wales. Registered No 02366949

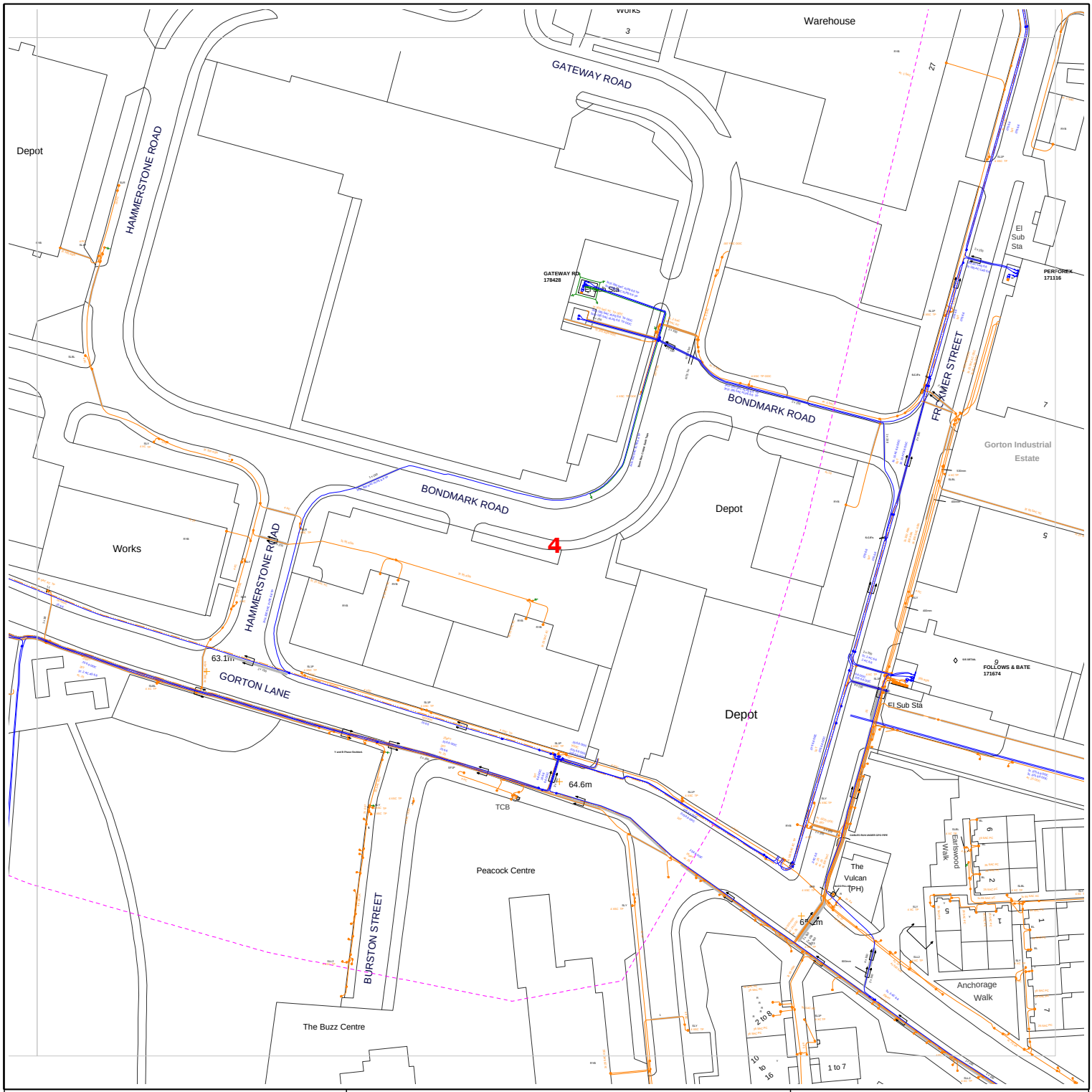

Requested by: Christina Elliott

Company: Atkins

Date Requested: 03/05/2018

Job Reference: 12764461

Your Scheme/Reference: 64875/AV

Dig Sites:

Area Line

Operating Voltage	Colour Code	Line Colour
132kV	Black	
33kV	Green	
22kV-25kV	Yellow	
11kV	Red	
6kV-6.6kV	Blue	
1kV-6kV	Violet	
LV	Orange	
Unknown Voltage	Brown	

electricity north west

Data Management
Electricity North West
Linley House
Dickinson Street
Manchester, M1 4LF
Phone: 0800 195 4141
Email: planrequest@enwl.co.uk

Scales on A4 paper:
1:1250 Area dig site
1:250 Line dig site

Unless otherwise indicated the depth of Electricity North West Limited cables are in accordance with NJUG (450mm for Low Voltage & 600mm for 11kV cables) 33kV and 132kV cables are laid at depths as marked. The depth and positions of Electricity North West Limited equipment was accurate as shown when the equipment was installed. However third parties may have altered the level & other reference data. Therefore Electricity North West Limited accept no responsibility for the position of Electricity North West Limited equipment being different from shown. No person, body or company, shall be relieved from liability for damage caused to Electricity North West Limited equipment by reason of being located differently to the indications on this drawing. Service cables are not necessarily shown but must be assumed to exist to all premises, streetlights and signs. There may be other Electricity North West Limited apparatus in the vicinity which is not indicated on the cable records. Other apparatus may also be present which is owned by a third party other than Electricity North West Limited.

Reproduced from or based upon Ordnance Survey's map with the permission of Her Majesty's Stationary Office. Crown Copyright Reserved. LICENCE No. 100017892. Unauthorised reproduction may lead to Prosecution or Civil Proceedings.

Reference should be made to HSE Guidance, HS(G)47 "Avoiding Danger from Underground Services" and GS6 "Avoidance of Danger from Overhead Power Lines".

Electricity North West Limited 304 Bridgewater Place, Birchwood Park, Warrington WA3 6XG. Registered in England and Wales. Registered No 02366949

3.0 Environment Agency

Utility Solutions GDC Requests

From: Enquiries, Unit <enquiries@environment-agency.gov.uk>
Sent: 7 May, 2018 4:06 PM
To: Utility Solutions GDC Requests
Subject: RE: Plant Enquiry - 64875 - Site surrounding Gorton Lane, Preston Street and Hammerstone Road, Manchester - Please respond by 11/05/2018

Follow Up Flag: Follow up
Flag Status: Flagged

Dear Customer,

I have passed your e-mail to the local customer team who will deal with your request.

The Freedom of Information Act and Environmental Information Regulations state that a public authority must respond to requests for information within 20 working days, but we aim to respond to all enquiries as quickly as we can.

You can find more information about our service commitment by clicking on the link below:

https://www.gov.uk/government/publications/environment-agency-customer-service-commitment

You can contact our customer team directly on the contact details below, or call the National Customer Contact Centre on 03708 506506 who will transfer you to the area team.

Customers and Engagement
Environment Agency
Greater Manchester, Merseyside and Cheshire Area
Richard Fairclough House
Knutsford Road
Latchford
Warrington
WA4 1HT

Kind Regards

Paul Norris

Environment Agency - Incident Communication Service
Part of National Operations

* Mail To: incident_communication_service@environment-agency.gov.uk
(Incident Hotline: 0800 807060
7 Fax: 0800 5876032
: Web Site: www.gov.uk/environment-agency
Environment Agency, Quadrant 2, 99 Parkway Ave, Parkway Business Park, Sheffield, S9 4WG

Click an icon to keep in touch with us:-

From: Vajare, Adarsh [mailto:Adarsh.Vajare@atkinsglobal.com] **On Behalf Of** Utility Solutions GDC Requests
Sent: 03 May 2018 12:39
To: plantenquiries@catelecomuk.com; plantenquiries@energetics-uk.com; Enquiries, Unit <enquiries@environment-agency.gov.uk>; plantenquiries@instalcom.co.uk; opburiedservicesenquiries@networkrail.co.uk; interoute.enquiries@plancast.co.uk; nrswa@sky.uk; assetrecords@utilityassets.co.uk; osp-team@uk.verizon.com; National Plant Enquiry's

Standard notice *[not for use with Special Data, Personal Data or unlicensed 3rd party rights]*

Information warning

We (The Environment Agency) do not promise that the Information supplied to You will always be accurate, free from viruses and other malicious or damaging code (if electronic), complete or up to date or that the Information will provide any particular facilities or functions or be suitable for any particular purpose. You must ensure that the Information meets your needs and are entirely responsible for the consequences of using the Information. Please also note any specific information warning or guidance supplied to you.

Permitted use

- The Information is protected by intellectual property rights and whilst you have certain statutory rights which include the right to read the Information, you are granted no additional use rights whatsoever unless you agree to the licence set out below.
- Commercial use of anything except EA OpenData is subject to payment of a £50 licence fee (+VAT) for each person seeking the benefit of the licence, except for use as an Environment Agency contractor or for approved media use.
- To activate this licence you do not need to contact us (unless you need to pay us a Commercial licence fee) but if you make any use in excess of your statutory rights you are deemed to accept the terms below.

Licence

We grant you a worldwide, royalty-free (apart from the £50 licence fee for commercial use), perpetual, non-exclusive licence to use the Information subject to the conditions below.

You are free to:

- copy, publish, distribute and transmit the Information
- adapt the Information
- exploit the Information commercially, for example, by combining it with other Information, or by including it in your own product or application

You must (where you do any of the above):

- acknowledge the source of the Information by including the following attribution statement:
  "Contains Environment Agency information © Environment Agency and database right"
- ensure that you do not use the Information in a way that suggests any official status or that We endorse you or your use of the Information
- ensure that you do not mislead others or misrepresent the Information or its source or use the Information in a way that is detrimental to the environment, including the risk of reduced future enhancement
- ensure that your use of the Information does not breach the Data Protection Act 1998 or the Privacy and Electronic Communications (EC Directive) Regulations 2003

These are important conditions and if you fail to comply with them the rights granted to you under this licence, or any similar licence granted by us will end automatically.

No warranty

The Information is licensed 'as is' and We exclude all representations, warranties, obligations and liabilities in relation to the Information to the maximum extent permitted by law. We are not liable for any errors or omissions in the Information and shall not be liable for any loss, injury or damage of any kind caused by its use. We do not guarantee the continued supply of the Information.

Governing Law

This licence is governed by the laws of England and Wales.

Definitions

"Information" means the information that is protected by copyright or by database right (for example, literary and artistic works, content, data and source code) offered for use under the terms of this licence.

"Commercial" means:

- offering a product or service containing the Information, or any adaptation of it, for a charge, or
- internal use for any purpose, or offering a product or service based on the Information for indirect commercial advantage, by an organisation that is primarily engaged in trade, commerce or a profession.

4.0 Instalcom - (CenturyLink, Global Crossing, Fibernet & Fiberspan) - Telecommunications

ATKINS CHECKED
SM

Murthy, Srinivasa

From: Plantenquiries <Plantenquiries@instalcom.co.uk>
Sent: 09 May 2018 17:23
To: Utility Solutions GDC Requests
Subject: E05-18-1506 RE: Plant Enquiry - 64875 - Site surrounding Gorton Lane, Preston Street and Hammerstone Road, Manchester - Please respond by 11/05/2018
Attachments: 64875 - Gorton Lane, Preston St and Hammerstone Rd, Manchester.pdf; Guide To Excavation.pdf; CenturyLink - Instalcom Nominated Agent Letter 21.02.2018.pdf

Dear Sir or Madam,

With reference to your enquiry regarding the above noted location, we enclose the drawings on behalf of CenturyLink Communications UK Limited (formerly Level 3) indicating the approximate position of services in this area.

If you need access to the railway / underground lines as part of your works could you please contact Peter Walton (peter.walton@centurylink.com) for further information about the location of this equipment.

We would draw your attention to the fact that while the position of the plant has been shown as accurately as possible, the information is intended as a general guide only and must not be relied upon in the event of any excavations or other work in the vicinity. **We would remind you that the onus remains on you to determine the exact position for example by a hand excavated trial hole.** Instalcom accepts no liability for claims arising from any inaccuracy, omissions or errors contained herein. If you would like to query the location further, please email us accordingly and we can arrange an in depth survey, which will be charged at a cost. Enclosed is a guide to excavation works around existing plant.
Instalcom responds to plant enquiries for CenturyLink (formerly LEVEL 3), GLOBAL CROSSING (UK) LTD, GLOBAL CROSSING PEC and FIBERNET UK LTD and FIBRESPAN LTD simultaneously and therefore you only need send one copy of a plant enquiry to cover all of these companies.

If you require any further information, please do not hesitate to contact me.

Regards

Plant Enquiries Dept
Instalcom Limited
Borehamwood Ind. Park
Rowley Lane
Borehamwood
WD6 5PZ

Office: +44 (0)208 731 4613
Fax: +44 (0)208 731 4601
Email: plantenquiries@instalcom.co.uk
Web: http://www.instalcom.co.uk



Google earth

feet 2000
meters 600

SPECIAL REQUIREMENTS IN RELATION TO CENTURYLINK PLANT

1. In this special requirement, the following terms shall have the meanings assigned to it:-

   a. "Company" means CenturyLink.

   b. "Company Representative" means the staff of CenturyLink or its Authorized Representatives and Agents.

   c. "Apparatus" means all surface or sub-surface equipment and plant including any associated cabling and/or ducting owned leased or rented by CenturyLink.

2. Before commencing any work or moving heavy plant or equipment over any portion of the site, the contractor shall confirm details of the Apparatus, owned, leased or rented by the Company, within the site with the Company Representative, who can be contacted at the following point: -

Instalcom Limited
Borehamwood Industrial Park
Rowley Lane
Borehamwood
Hertfordshire
WD6 5PZ
Tel: 0208 731 4600
Fax: 0208 731 4601
E-mail: plantenquiries@instalcom.co.uk

3. Where such details show that the works or the movement of plant or equipment may endanger the Apparatus of the Company the Contractor must give the Company Representative at least 7 days written notice of the date on which it is intended to commence such works of the movement of plant and equipment in order that the presence of any sub-surface apparatus can be indicated by markers to be supplied by the Company and placed by the Contractor under the supervision of a Company Representative. The Contractor shall ensure that all Company Apparatus, particularly surface running cabling is adequately protected from damage and such protective measures shall be approved by the Company Representative.

4. In the event of a Company marker being disturbed for any reason, it shall not be replaced other than in the exact position of its former depth unless the repositioning is carried out at the direction and under the supervision of a Company Representative.

5. The Contractor shall take particular care in relation to the protection of Company Apparatus, where such Apparatus includes the presence within the site of optical fibre cabling. The contractor should particularly note that the damage to such Apparatus is extremely disruptive to the Company network and costly to reinstate. The Contractor shall make every effort to avoid the disturbance of Company Apparatus more than is absolutely necessary for the completion of the works in accordance with the contract.

6. When excavating around, moving or backfilling around Company Apparatus, the Company Representative shall be given adequate notice, which shall not be less than 3 days, of the contractor's intentions in order that he may supervise the works. The Contractor should note that the normal depth of cover for Company Apparatus and ducts are as follows: -

   a. Carriageways 600mm
   b. Footways 350mm
   c. Verges 450mm

These minimum depths of cover should be maintained wherever possible.

Where the minimum depths of cover cannot be maintained, the Contractor shall carry out the instructions of the Company Representative for the protection of Company Apparatus.

Where cables are not in duct and the required depth of cover cannot be maintained, such cables as are affected shall be enclosed and protected in UPVC duct or equivalent materials as supplied by the Company and by the method directed by the Company Representative.

With regard to excavation in the vicinity of Company Apparatus the Contractor should have particular regard to the possibility of reduced cover and the encountering of such Company Apparatus at depths of cover less than that given at **a, b and c above**.

7. All excavation adjacent to Company Apparatus is to be carried out by hand until the exact extent and/or location of Company Apparatus is known. Mechanical borers and/or excavators shall not be used within 1.0m of Company Apparatus without the supervisory presence of a Company Representative, to prevent any movement of Company Apparatus during excavations, complete shuttering shall be used as directed by the Company Representative if:-

   a. Excavation is deeper than the depth of cover of adjacent Company Apparatus.

   b. Excavation is within 1.0m of Company Apparatus in stable ground.

   c. Excavation is within 5.0m of Company Apparatus in unstable ground.

   If for the completion of the works, the Contractor intends using any of the following: -

   a. Pile driving equipment within 10.0m of Company Apparatus.

   b. Explosives within 20.0m of Company Apparatus.

   c. Laser equipment within 10.0m of Company Apparatus.

   The Contractor shall advise the Company Representative, giving at least 7 working days written notice in order that any special protective measure for the Company Apparatus affected may be arranged.

8. All Company manhole, joint box and /or other access points and chambers within the site shall be kept clear and unobstructed. Access for vehicles, winches, cable drums and/or further equipment required by the Company for the maintenance of it's Apparatus, must be maintained at all reasonable times. The Contractor should particularly note that footway type jointing chambers are not specified for carriageway loadings and will need to be adequately protected and/or demolished and rebuilt under the supervision of a Company Representative where such chambers are likely to be placed at risk, either temporarily or permanently, from the movement of plant and/or equipment on the site.

9. The covers to Company chambers and/or Apparatus shall only be lifted by means of appropriate keys obtained from the Company Representative and under the direct supervision of the Company Representative. No employee of the Contractor or of any sub-contractor employed by the Contractor shall enter any chamber and/or Apparatus of the Company unless under the supervision of the Company Representative and in any case not before the mandatory gas check has been carried out in the presence of the Company Representative and such checks have shown it to be safe to enter the chamber and/or Apparatus of the Company.

   The Company Representatives shall be given reasonable access to all Company Apparatus and chambers when required.

10. In the event of any damage whatsoever to Company Apparatus, the Contractor shall immediately inform the Company Representative and report the occurrence immediately by contacting the Company as follows:-

Telephone:-

0208 731 4600
Mon-Fri Office Hours (Instalcom Head Office)

0845 330 8615
Out of Office Hours / Weekends

11. The above requirements do not relieve the Contractor of any of his obligations under the Contract.

The accuracy of information on the plans cannot be guaranteed and no liability can be accepted for errors or omissions.

Damage to Communications Plant is Expensive – Please Take Care.

CenturyLink®

To whom it may concern (Applicant)

Date as postmark

Re: On Rail Plant Protection and Diversionary Works.

History

CenturyLink Communications UK Limited ("CenturyLink") has leased from Network Rail PLC ("Network Rail") telecommunications cabling lying alongside the railway track throughout the United Kingdom, under a Finance Lease dated 30 June 1994.

CenturyLink has run cables on the railway infrastructure throughout the UK under the provision of the Network Rail Deed of Grant dated 31 March 1995.

CenturyLink has two wayleave agreements with London Underground Limited to lay Fibre Optic cables in the London Underground environment dated 30th March 1994 and 24th April 1998.

CenturyLink has a wayleave agreement with Serco and Docklands Light Railway to lay Fibre Optic cables alongside the Docklands Light Railway dated 18th March 2011

CenturyLink has an agreement with City, Greenwich, Lewisham Rail Link PLC to lay cabling along the Lewisham extension of the Docklands Light Railway dated 11th February 2002.

Application

The Applicant is proposing to undertake civil engineering works on the On Railway infrastructure (either Network Rail, London Underground Limited and Docklands Light Railway) and has requested CenturyLink to divert cabling so that the civil engineering works may proceed, and also has requested CenturyLink on completion of the civil engineering works to replace such cabling along its original route.

Please be advised that with effect from 1st June 2011 CenturyLink has engaged a nominated Agent to deal with all On Rail Plant Protection and Diversionary Works on CenturyLink's behalf.

This will cover enquiries for and from the following list of CenturyLink group companies:

CENTURYLINK COMMUNICATIONS UK LIMITED
CENTURYLINK COMMUNICATIONS EUROPE LIMITED

CenturyLink Communications UK Limited. Registered office: 7TH Floor, 10 Fleet Place, London EC4M 7RB, United Kingdom. Registered in England and Wales, Company registration No. 02495998.

CenturyLink®

LEVEL 3 COMMUNICATIONS LIMITED

The nominated Agent and contact details for Instalcom are:

Instalcom Ltd
Borehamwood Ind Park
Rowley Lane, Borehamwood
WD6 5PZ, UK

Paul Alderton
paul.alderton@instalcom.co.uk
Office: +44 208 731 4600
Mobile: +44 7831 842772

The Applicant is required to liaise with the nominated Agent in order to make arrangements for the carrying out of the On Rail Plant Protection and Diversionary Works.

The nominated Agent is further authorised to collect all relevant costs associated with the On Rail Plant Protection and Diversionary Works.

The nominated Agent shall be liable for any and all charges levied against CenturyLink if the nominated Agent (including its employees, agents or sub-contractors) has acted fraudulently or negligently or breaches the authority given to it by CenturyLink for the purposes of the carrying out of the On Rail Plant Protection and Diversionary Works.

For and on behalf of CenturyLink Communications UK Limited: -

Signed..Scott C. Pearce.. Print..SCOTT C. PEARCE..

Title: ..ASSOCIATE GENERAL COUNSEL.. Date..21 FEBRUARY 2018..

5.0 LinesearchbeforeUdig

Enquiry Confirmation

LSBUD Ref: 12764461

Date of enquiry: 03/05/2018
Time of enquiry: 12:29

Enquirer

Name	Ms Christina Elliott	Phone	01454 662397
Company	Atkins	Mobile	Not Supplied
		Fax	Not Supplied
Address	500 Park Avenue Aztec West Almondsbury Bristol BS32 4RZ		
Email	stat.enquiries@atkinsglobal.com		
Notes	Please ensure your contact details are correct and up to date on the system in case the LSBUD Members need to contact you.		

Enquiry Details

Scheme/Reference	64875/AV		
Enquiry type	Initial Enquiry	Work category	Utility Works
Start date	11/05/2018	Work type	Single excavation site
End date	10/08/2018	Site size	164933 metres square
Searched location	XY= 388216, 396834	Work type buffer*	25 metres
Confirmed location	388217 396872		

* The WORK TYPE BUFFER is a distance added to your search area based on the Work type you have chosen.

Site Map

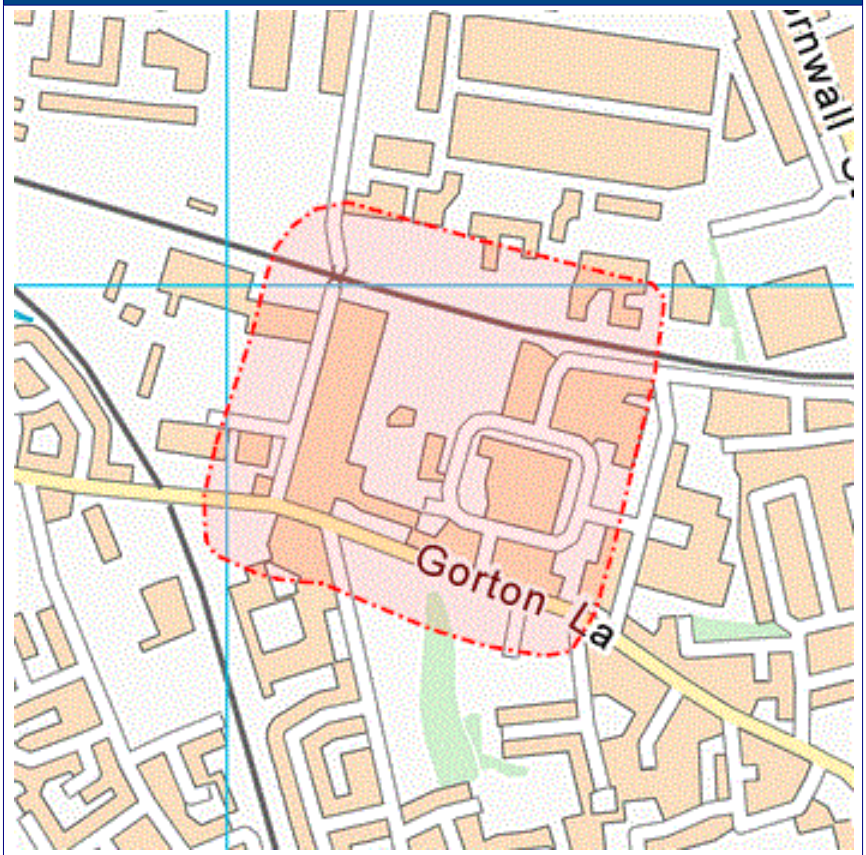

V3.3.2 Contains Ordnance Survey data © Crown copyright and database right 2016

Enquiry Confirmation

LSBUD Ref: 12764461

Date of enquiry: 03/05/2018
Time of enquiry: 12:29

LSBUD Members who have assets registered on the LSBUD service within the vicinity of your search area.

List of affected LSBUD members			
Asset Owner	**Phone/Email**	**Emergency Only**	**Status**
Electricity North West Limited	08001954141	08001954141	Await response

LSBUD Members who do not have assets registered on the LSBUD service within the vicinity of your search area. Please be aware that LSBUD Members make regular changes to their assets and this list may vary for new enquiries in the same area.

List of not affected LSBUD members		
AWE Pipeline	Gigaclear PLC	Redundant Pipelines - LPDA
BOC Limited (A Member of the Linde Group)	Gtt	RWEnpower (Little Barford and South Haven)
BP Exploration Operating Company Limited	Humbly Grove Energy	SABIC UK Petrochemicals
BPA	IGas Energy	Scottish Power Generation
Carrington Gas Pipeline	INEOS FPS Pipelines	Seabank Power Ltd
CATS Pipeline c/o Wood Group PSN	INEOS Manufacturing (Scotland and TSEP)	SGN
Cemex	INOVYN Enterprises Limited	Shell (St Fergus to Mossmorran)
Centrica Storage Ltd	Intergen (Coryton Energy or Spalding Energy)	Shell Pipelines
CLH Pipeline System Ltd	Mainline Pipelines Limited	SSE (Peterhead Power Station)
Concept Solutions People Ltd	Manchester Jetline Limited	Tata Communications (c/o JSM Construction Ltd)
ConocoPhillips (UK) Ltd	Manx Cable Company	Total (Colnbrook & Colwick Pipelines)
DIO (MOD Abandoned Pipelines)	Marchwood Power Ltd (Gas Pipeline)	Total Finaline Pipelines
E.ON UK CHP Limited	Melbourn Solar Limited	Transmission Capital
EirGrid	National Grid Gas (Above 7 bar), National Grid Gas Distribution Limited (Above 2 bar) and National Grid Electricity Transmission	UK Power Networks
ENI & Himor c/o Penspen Ltd	Northumbrian Water Group	Uniper UK Ltd
EnQuest NNS Limited	NPower CHP Pipelines	Vattenfall
EP Langage Limited	Oikos Storage Limited	Veolia ES SELCHP Limited
ESP Utilities Group	Ørsted	Western Power Distribution
ESSAR	Perenco UK Limited (Purbeck Southampton Pipeline)	Westminster City Council
Esso Petroleum Company Limited	Petroineos	Wingas Storage UK Ltd
Fulcrum Pipelines Limited	Phillips 66	Zayo Group UK Ltd c/o JSM Group Ltd
Gamma	Premier Transmission Ltd (SNIP)	
Gateshead Energy Company	Prysmian Cables & Systems Ltd (c/o Western Link)	

6.0 Manchester City Council - Council

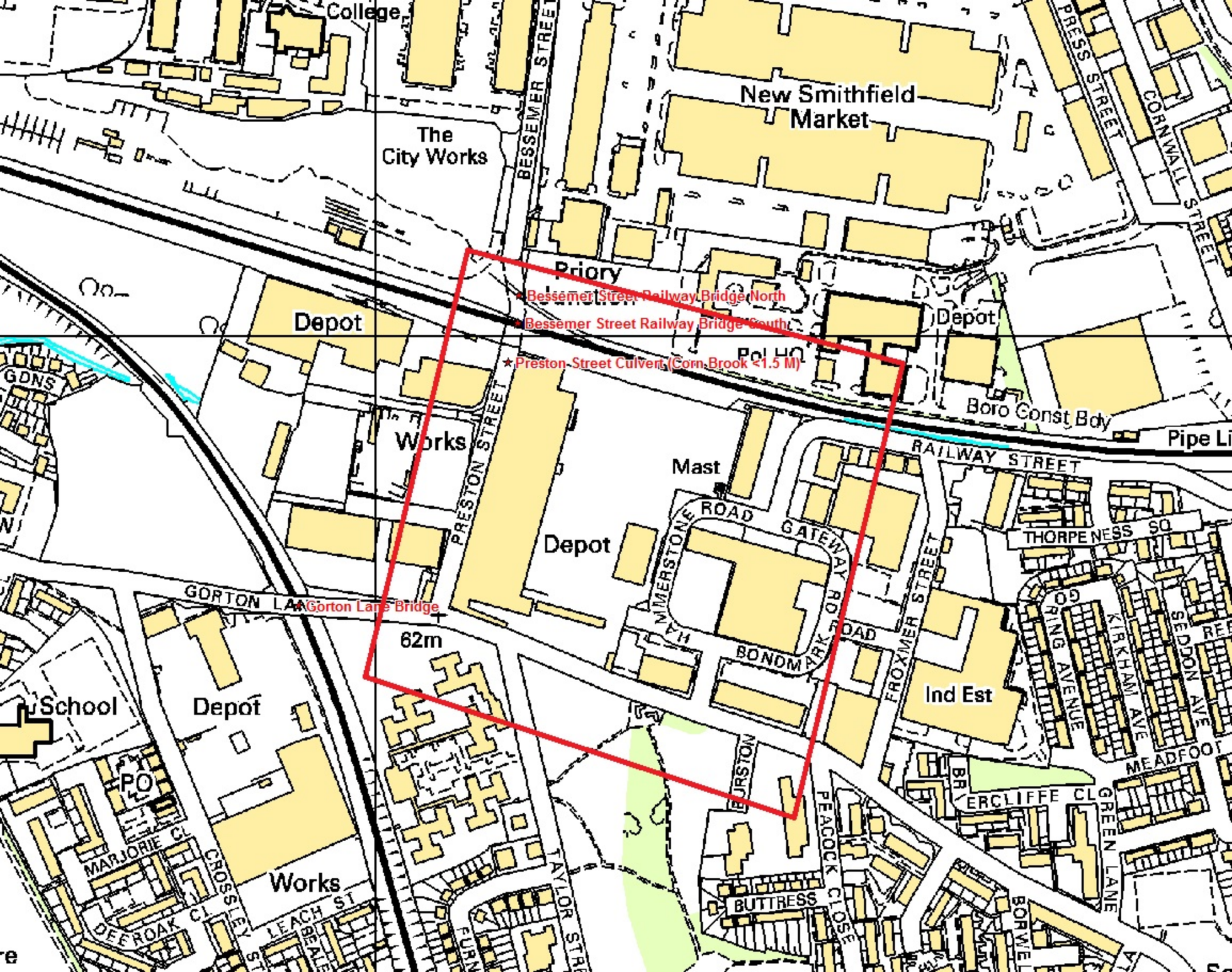
College
The City Works
BESSEMER STREET
New Smithfield Market
PRESS STREET
CORNWALL STREET
Priory
Bessemer Street Railway Bridge North
Bessemer Street Railway Bridge South
Preston Street Culvert (Corn Brook <1.5 M)
Depot
Depot
Pol HQ
Boro Const Bdy
Pipe Li
Works
PRESTON STREET
RAILWAY STREET
Mast
Depot
ROAD
GATEWAY
THORPE NESS SQ
FROXMER STREET
Ind Est
GORTON LA
Gorton Lane Bridge
62m
BONDMARK ROAD
RING AVENUE
KIRKHAM AVE
SEDDON AVE
MEADFOO
School
Depot
PO
MARJORIE CL
CROSSLEY
Works
LEACH ST
DEERROAK CL
TAYLOR STRE
BUTTRESS
PEACOCK CLOSE
ERCLIFFE CL
GREEN LANE
BORWE

7.0 Openreach - British Telecommunications

Maps by email Plant Information Reply

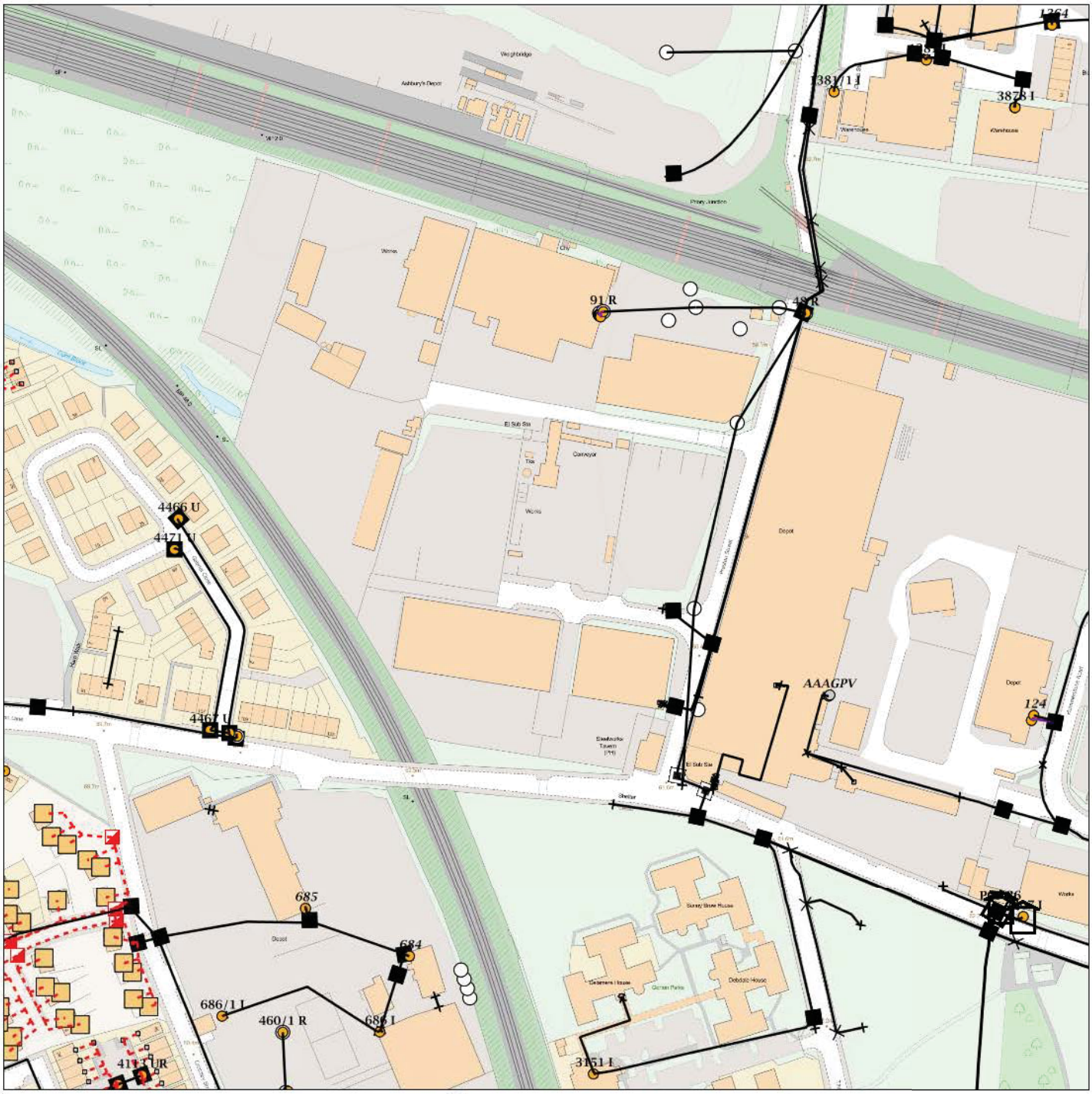

IMPORTANT WARNING

Information regarding the location of BT apparatus is given for your assistance and is intended for general guidance only. No guarantee is given of its accuracy. It should not be relied upon in the event of excavations or other works being made near to BT apparatus which may exist at various depths and may deviate from the marked route.

openreach

CLICK BEFORE YOU DIG

FOR PROFESSIONAL FREE ON SITE ASSISTANCE PRIOR TO COMMENCEMENT OF EXCAVATION WORKS INCLUDING LOCATE AND MARKING SERVICE

email cbyd@openreach.co.uk

ADVANCE NOTICE REQUIRED
(Office hours: Monday - Friday 08.00 to 17.00)
www.openreach.co.uk/cbyd

Reproduced from the Ordnance Survey map by BT by permission of Ordnance Survey on behalf of the Controller of Her Majesty's Stationary Office
(C) Crown Copyright British Telecommunications plc 100028040

KEY TO BT SYMBOLS

DP		Pole	
Planned DP		Planned Pole	
PCP		Joint Box	
Planned PCP		Change Of State	+
Built		Split Coupling	×
Planned		Duct Tee	▲
Inferred		Planned Box	
Building		Manhole	
Kiosk	K	Planned Manhole	
Hatchings		Cabinet	
		Planned Cabinet	

Other proposed plant is shown using dashed lines.
BT Symbols not listed above maybe disregarded.
Existing BT Plant may not be recorded.
Information valid at time of preparation

BT Ref : LGJ11378K
Map Reference : (centre) SJ8799796884
Easting/Northing : (centre) 387997,396884
Issued : 08/05/2018 11:37:15

WARNING: IF PLANNED WORKS FALL INSIDE HATCHED AREA IT IS ESSENTIAL BEFORE PROCEEDING THAT YOU CONTACT THE NATIONAL NOTICE HANDLING CENTRE. PLEASE SEND E-MAIL TO: nnhc@openreach.co.uk

Maps by email Plant Information Reply

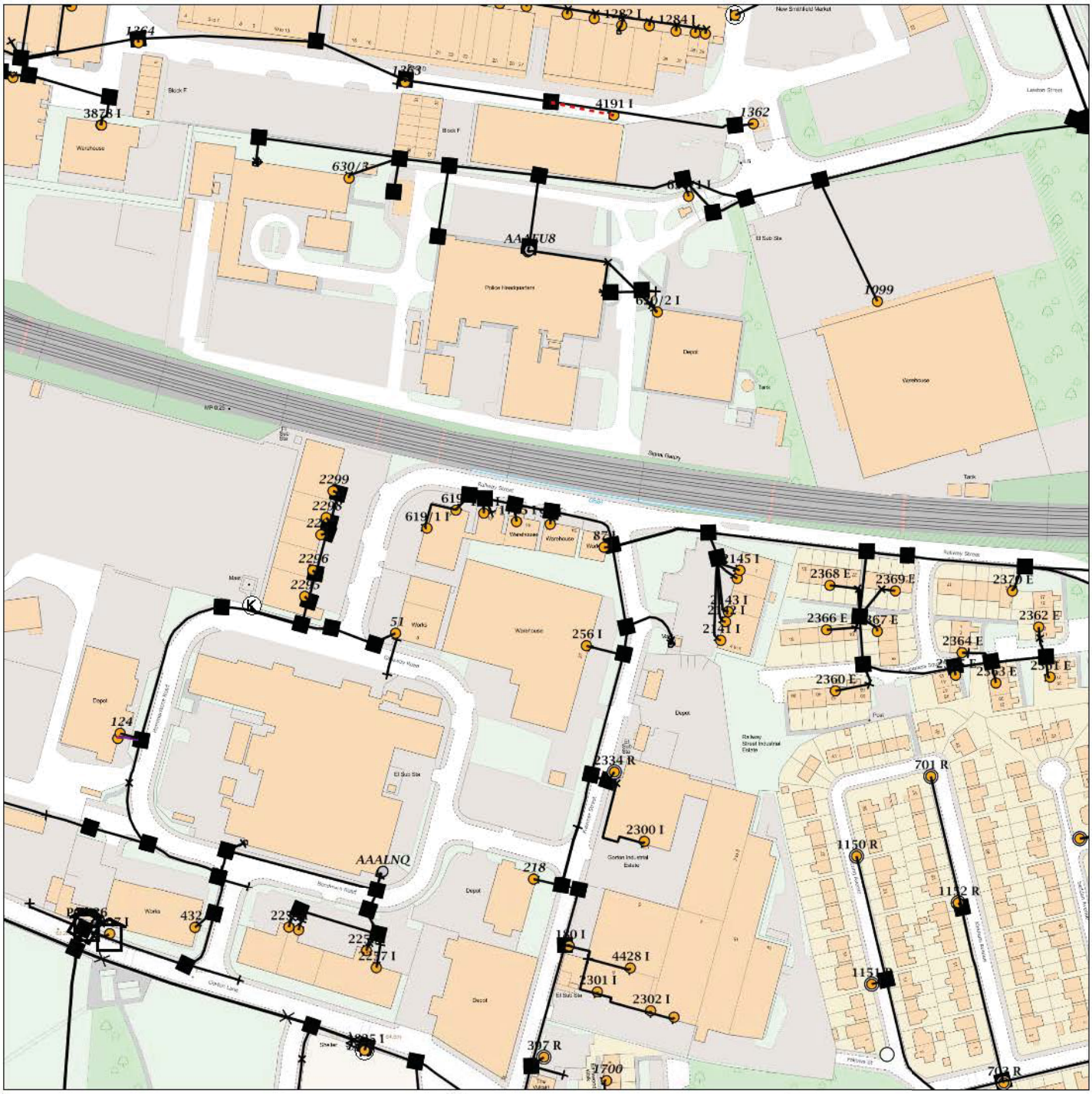

IMPORTANT WARNING

Information regarding the location of BT apparatus is given for your assistance and is intended for general guidance only. No guarantee is given of its accuracy. It should not be relied upon in the event of excavations or other works being made near to BT apparatus which may exist at various depths and may deviate from the marked route.

openreach

CLICK BEFORE YOU DIG

FOR PROFESSIONAL FREE ON SITE ASSISTANCE PRIOR TO COMMENCEMENT OF EXCAVATION WORKS INCLUDING LOCATE AND MARKING SERVICE

email cbyd@openreach.co.uk

ADVANCE NOTICE REQUIRED
(Office hours: Monday - Friday 08.00 to 17.00)
www.openreach.co.uk/cbyd

Reproduced from the Ordnance Survey map by BT by permission of Ordnance Survey on behalf of the Controller of Her Majesty's Stationary Office
(C) Crown Copyright British Telecommunications plc 100028040

KEY TO BT SYMBOLS

DP	Pole
Planned DP	Planned Pole
PCP	Joint Box
Planned PCP	Change Of State
Built	Split Coupling
Planned	Duct Tee
Inferred	Planned Box
Building	Manhole
Kiosk	Planned Manhole
Hatchings	Cabinet
	Planned Cabinet

Other proposed plant is shown using dashed lines.
BT Symbols not listed above maybe disregarded.
Existing BT Plant may not be recorded.
Information valid at time of preparation

BT Ref : LQX11379W
Map Reference : (centre) SJ8841896892
Easting/Northing : (centre) 388418,396892
Issued : 08/05/2018 11:37:43

WARNING: IF PLANNED WORKS FALL INSIDE HATCHED AREA IT IS ESSENTIAL BEFORE PROCEEDING THAT YOU CONTACT THE NATIONAL NOTICE HANDLING CENTRE. PLEASE SEND E-MAIL TO: nnhc@openreach.co.uk

Maps by email Plant Information Reply

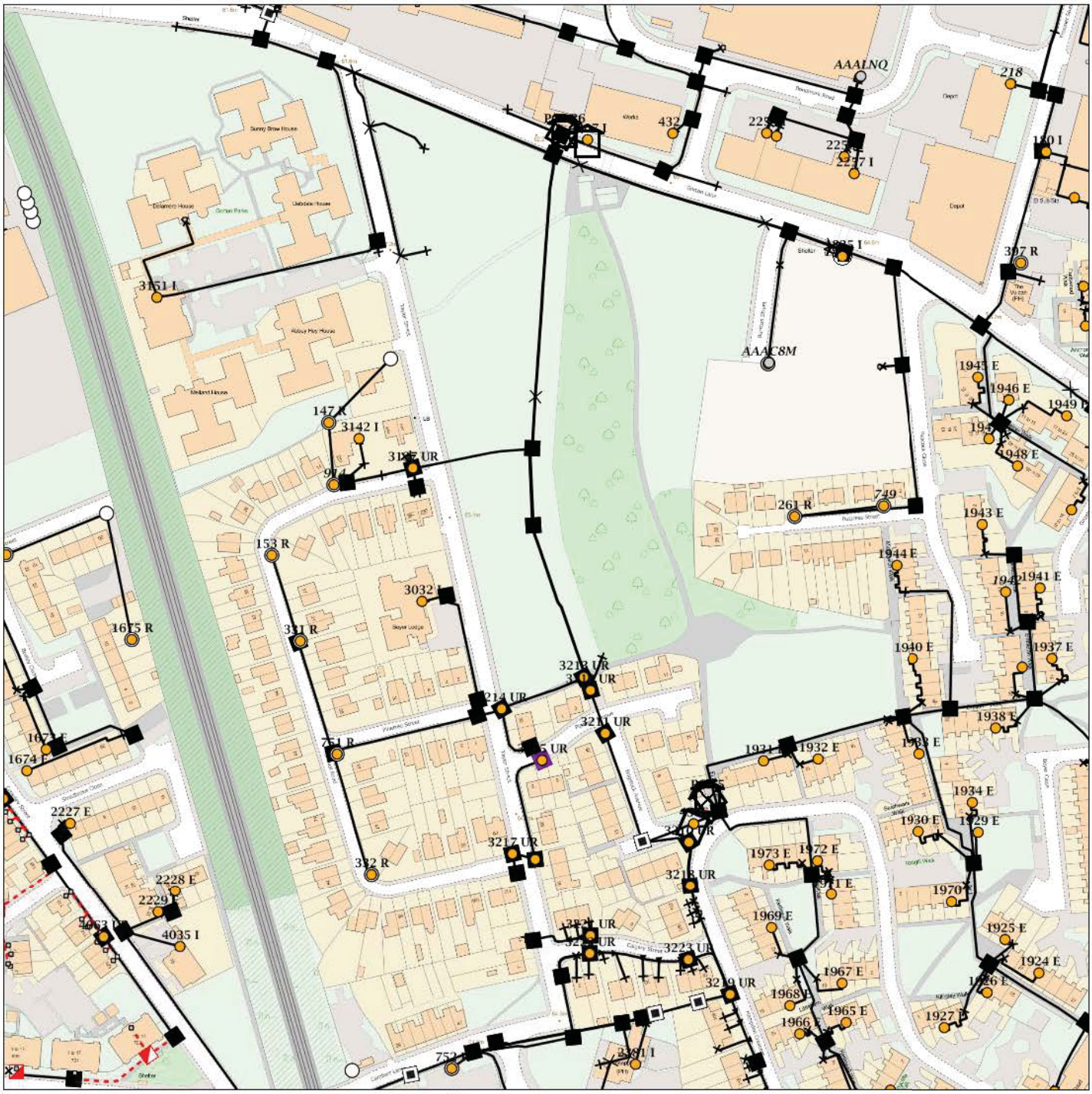

IMPORTANT WARNING

Information regarding the location of BT apparatus is given for your assistance and is intended for general guidance only. No guarantee is given of its accuracy. It should not be relied upon in the event of excavations or other works being made near to BT apparatus which may exist at various depths and may deviate from the marked route.

openreach

CLICK BEFORE YOU DIG

FOR PROFESSIONAL FREE ON SITE ASSISTANCE PRIOR TO COMMENCEMENT OF EXCAVATION WORKS INCLUDING LOCATE AND MARKING SERVICE

email cbyd@openreach.co.uk

ADVANCE NOTICE REQUIRED
(Office hours: Monday - Friday 08.00 to 17.00)
www.openreach.co.uk/cbyd

Reproduced from the Ordnance Survey map by BT by permission of Ordnance Survey on behalf of the Controller of Her Majesty's Stationary Office
(C) Crown Copyright British Telecommunications plc 100028040

KEY TO BT SYMBOLS

DP		Pole	
Planned DP		Planned Pole	
PCP		Joint Box	
Planned PCP		Change Of State	+
Built		Split Coupling	×
Planned		Duct Tee	▲
Inferred		Planned Box	
Building		Manhole	
Kiosk	K	Planned Manhole	
Hatchings		Cabinet	
		Planned Cabinet	

Other proposed plant is shown using dashed lines.
BT Symbols not listed above maybe disregarded.
Existing BT Plant may not be recorded.
Information valid at time of preparation

BT Ref : TEU11376Z
Map Reference : (centre) SJ8819896526
Easting/Northing : (centre) 388198,396526
Issued : 08/05/2018 11:37:58

WARNING: IF PLANNED WORKS FALL INSIDE HATCHED AREA IT IS ESSENTIAL BEFORE PROCEEDING THAT YOU CONTACT THE NATIONAL NOTICE HANDLING CENTRE. PLEASE SEND E-MAIL TO: nnhc@openreach.co.uk

8.0 Sky Telecommunications

SKY
NRSWA Department
70 Buckingham Avenue
SLOUGH
SL1 4PN

email: nrswa@sky.uk
Tel: 0207 032 3234

Date: 03/05/2018

Legend

- Sites
- Splice Position
- Pulling Chamber
- Sky Network - Underground
- Sky Network - Overhead
- Third Party Network

SCALE@ A3 1:3,000



Ordnance Survey Copyright
Mapping products are reproduced from Ordnance Survey material with the permission of Ordnance Survey on behalf of the Controller of Her Majesty's Stationery Office © Crown copyright.
Unauthorised reproduction infringes Crown copyright and may lead to prosecution or civil proceedings.

DRAWN BY: THA31

SKY
NRSWA Department
70 Buckingham Avenue
SLOUGH
SL1 4PN

email: nrswa@sky.uk
Tel: 0207 032 3234

Date: 03/05/2018

Legend

- Sites
- Splice Position
- Pulling Chamber
- Sky Network - Underground
- Sky Network - Overhead
- Third Party Network

SCALE@ A3 1:1,250

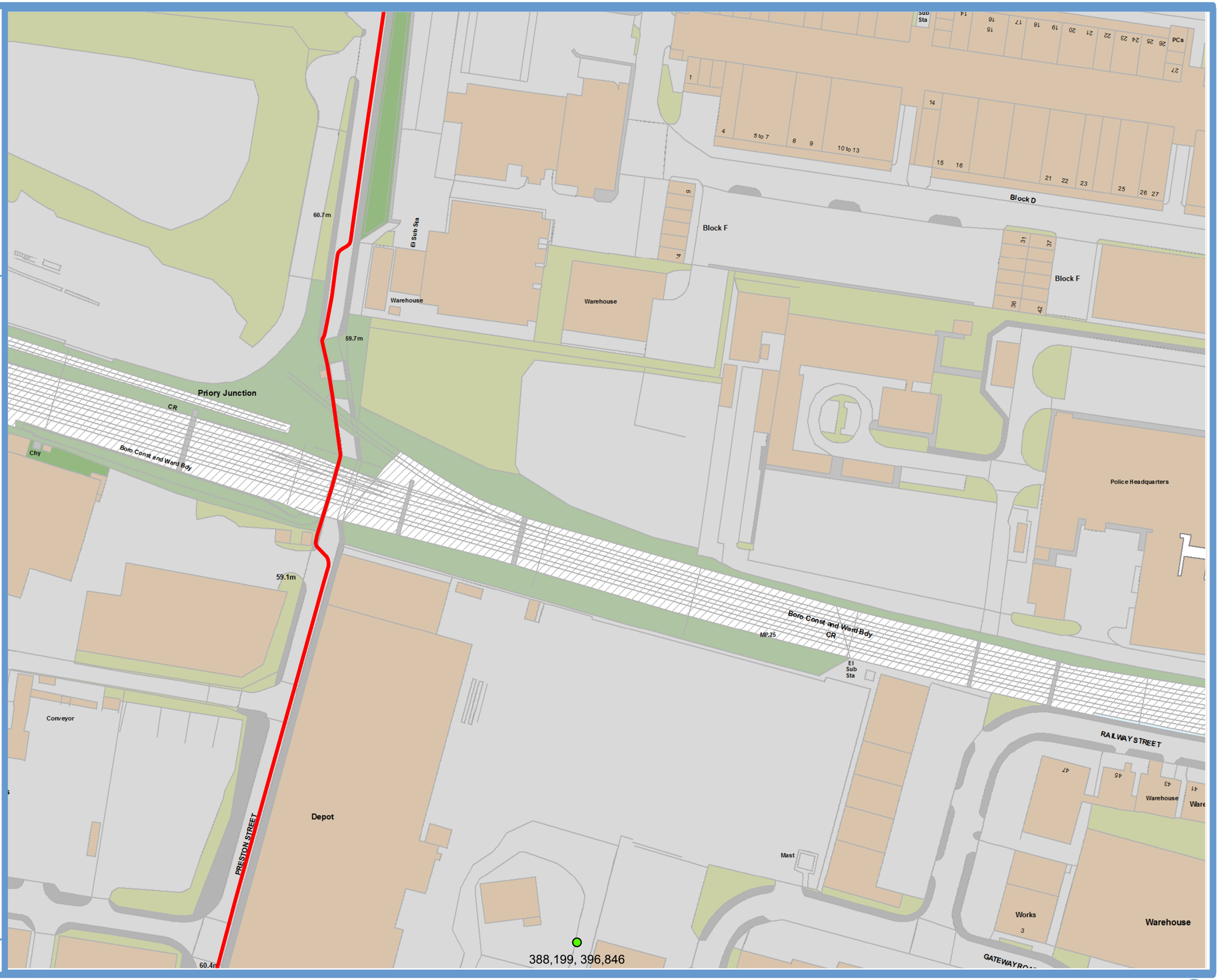

Ordnance Survey Copyright
Mapping products are reproduced from Ordnance Survey material with the permission of Ordnance Survey on behalf of the Controller of Her Majesty's Stationery Office © Crown copyright.
Unauthorised reproduction infringes Crown copyright and may lead to prosecution or civil proceedings.

DRAWN BY: THA31

SKY
NRSWA Department
70 Buckingham Avenue
SLOUGH
SL1 4PN

email: nrswa@sky.uk
Tel: 0207 032 3234

Date: 03/05/2018

Legend

- Sites
- Splice Position
- Pulling Chamber
- Sky Network - Underground
- Sky Network - Overhead
- Third Party Network

SCALE@ A3 1:1,250

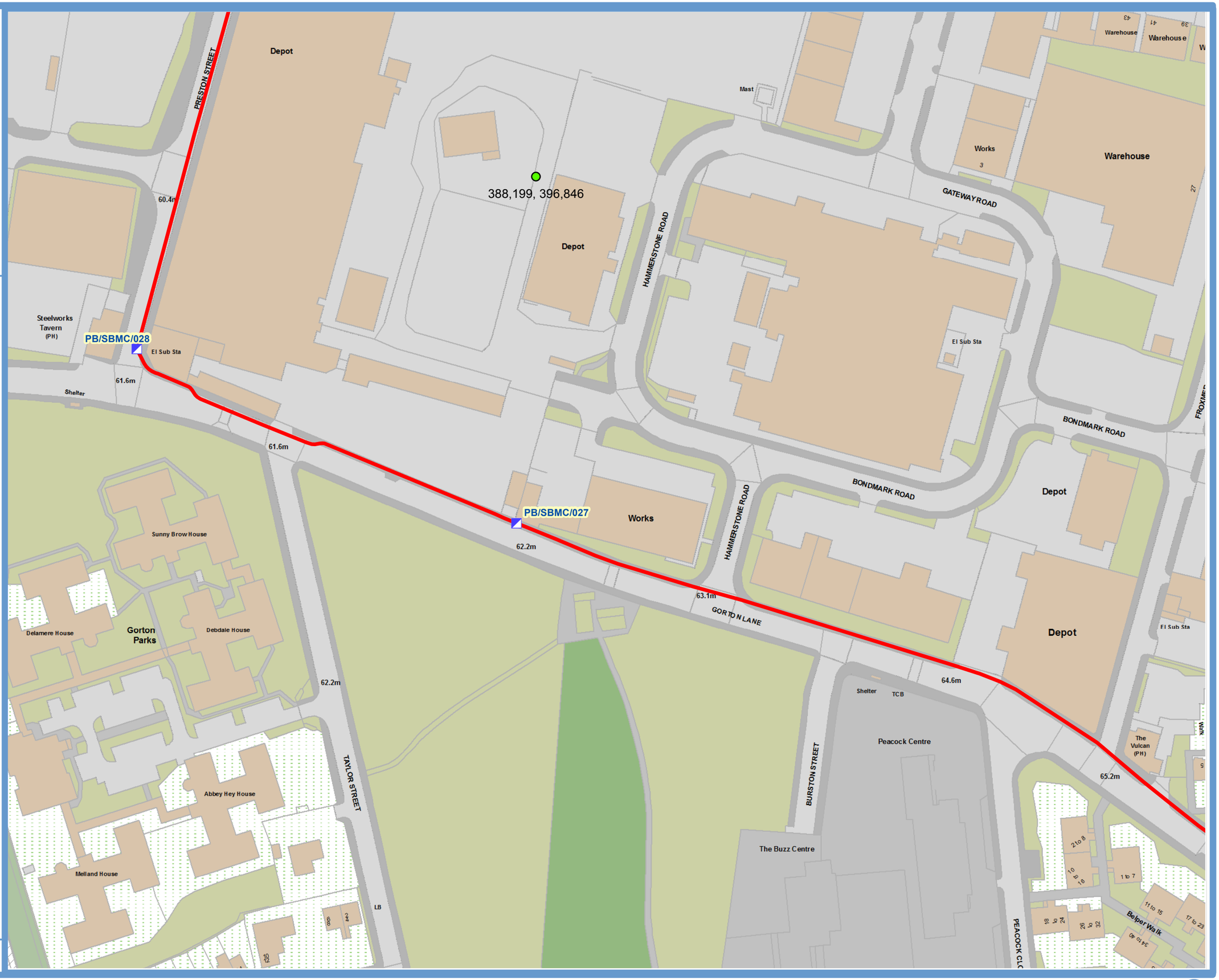

Ordnance Survey Copyright
Mapping products are reproduced from Ordnance Survey material with the permission of Ordnance Survey on behalf of the Controller of Her Majesty's Stationery Office © Crown copyright.
Unauthorised reproduction infringes Crown copyright and may lead to prosecution or civil proceedings.

DRAWN BY: THA31

9.0 United Utilities - Clean Water & Sewerage

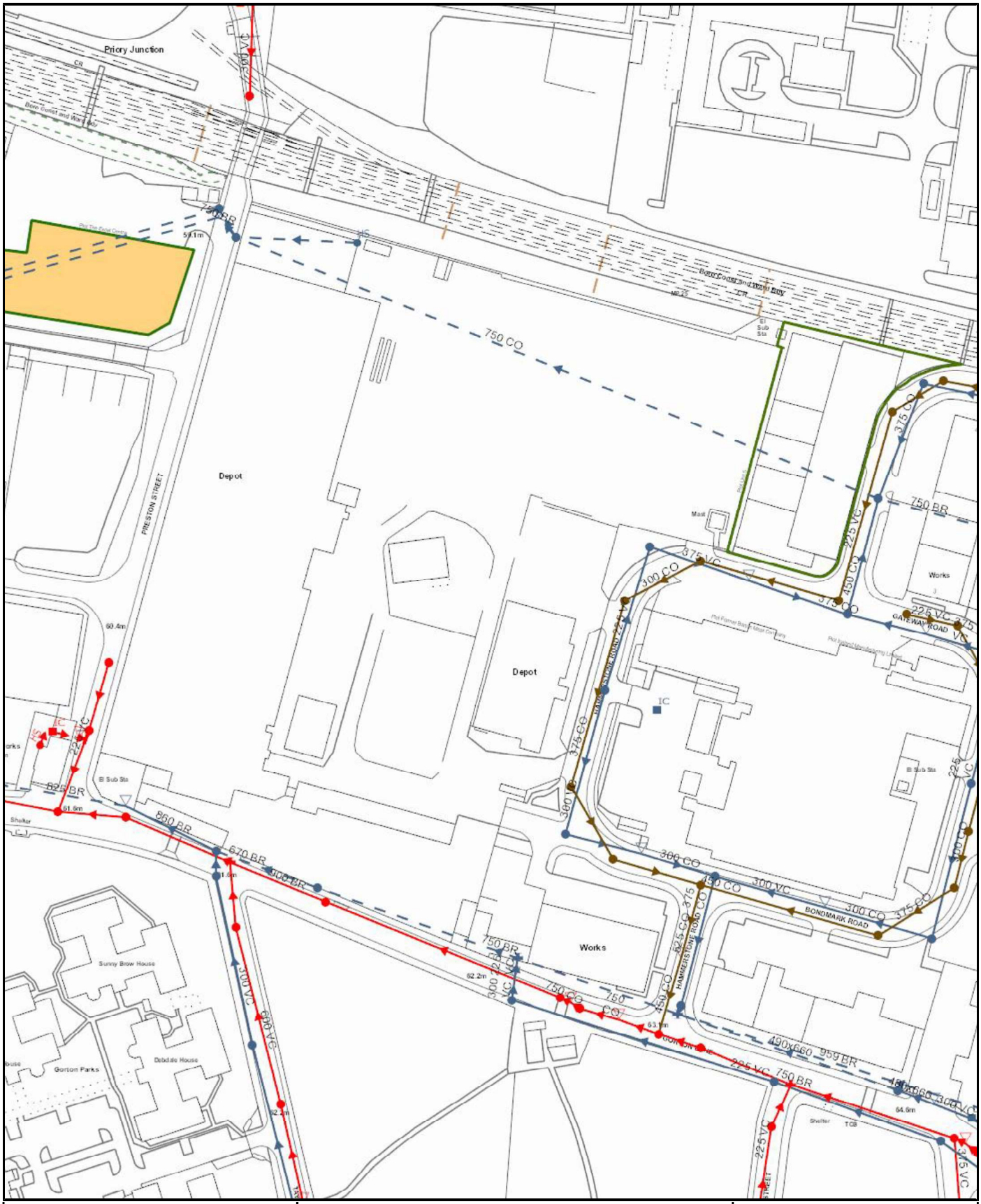

Scale:	1:1876	**SEWER RECORDS**	United Utilities helping life flow smoothly
Date:	08/05/2018		
Address or Site Reference:	Site surrounding Gorton Lane Preston Street and Hammerstone Road Manchester		
Printed by:	Property Searches		

The position of the underground apparatus shown on this plan is approximate only and is given in accordance with the best information currently available. United Utilities Water will not accept liability for any loss or damage caused by the actual position being different from those shown.

Crown copyright and database rights 2017 Ordnance Survey 100022432. Unauthorised reproduction will infringe these copyrights.

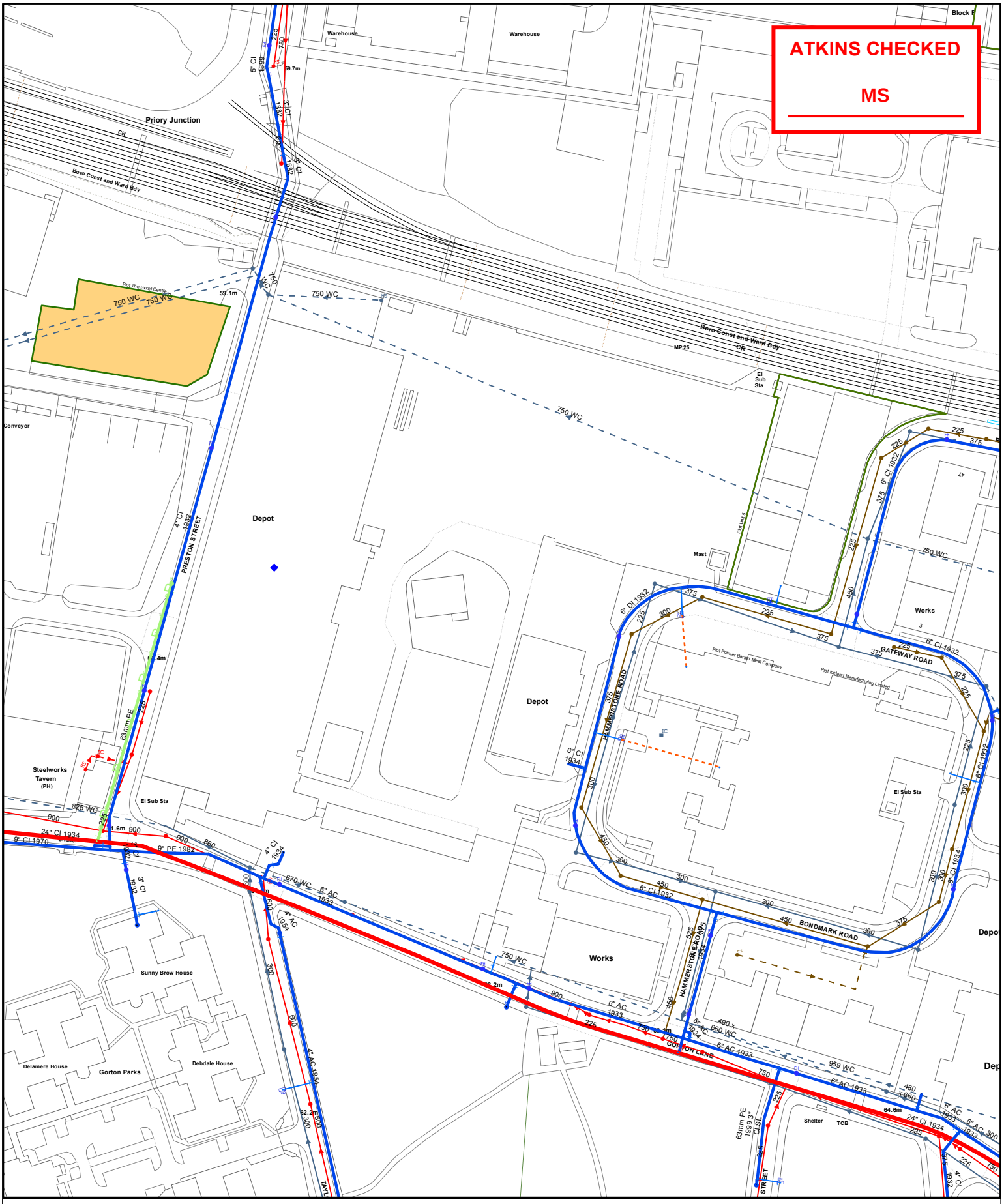

Date: 04/06/2018

Extract from maps of public sewers and water mains

Printed By:
Property Searches

Site surrounding Gorton Lane Preston Street and Hammerstone Road Manchester

United Utilities
helping life flow smoothly

The position of this underground apparatus shown on this plan is approximate only and is given in accordance with the best information currently available.The actual positions may be different from those shown on the plan and private pipes, sewers or drains may not be recorded. Private service pipes may be shown where a known record is available. United Utilities Water will not accept liability for any loss or damage caused by the actual position being different from those shown. Crown copyright and database rights [2016] Ordnance Survey 100022432.

United Utilities Water Limited 2014 The plan is based on the Ordnance Survey Map with the sanction of Controller of H.M.Stationery Office. Crown and Utilities copyrights are reserved. Unauthorised reproduction will infringe these copyrights.

10.0 Virgin Media - Telecommunications



(c) Crown copyright and database rights 2018 Ordnance Survey 100019209 Date: 18/07/18 Scale: 1:4715 Map Centre: 388199,396830 Data updated: 02/07/18 Telecoms Plan A4

Important Information - please read The purpose of this plan is to identify Virgin Media apparatus. We have tried to make it as accurate as possible but we cannot warrant its accuracy. In addition, we caution that within Virgin Media apparatus there may be instances where mains voltage power cables have been placed inside green, rather than black ducting. Further details can be found using the "Affected Postcodes.pdf", which can be downloaded from this website. Therefore, you must not rely solely on this plan if you are carrying out any excavation or other works in the vicinity of Virgin Media apparatus. The actual position of any underground service must be verified by cable detection equipment, etc. and established on site before any mechanical plant is used. Accordingly, unless it is due to the negligence of Virgin Media, its employees or agents, Virgin Media will not have any liability for any omissions or inaccuracies in the plan or for any loss or damage caused or arising from the use of and/or any reliance on this plan. This plan is produced by Virgin Media Limited (c) Crown copyright and database rights 2018 Ordnance Survey 100019209.

Duct, Trench

Chamber

Cabinet

stephy.jaison@virginmedia.co.uk

VM.1110847

11.0 Vodafone - Telecommunications



Some of the material in this plan has been reproduced from an Ordnance Survey map with the permission of The Controller of Her Majesty's Stationary Office, © Crown Copyright
Ordnance Copyright & Ordnance Survey GB License 100031653

Legend

Underground Route.Route Act. - Leased

vodafone

Vodafone Limited (No01471587) registered office is at Vodafone House, The Connection, Newbury, Berkshire, RG142FN

Plot Date : 08/05/2018	Scale : 1:1250

This plan shows apparatus owned by members of the Vodafone Group of companies (including legacy telecommunication companies currently within the group)

Information with regard to such apparatus should always be obtained from Vodafone or its appointed agents.

12.0 Manchester City Council - Street Lighting

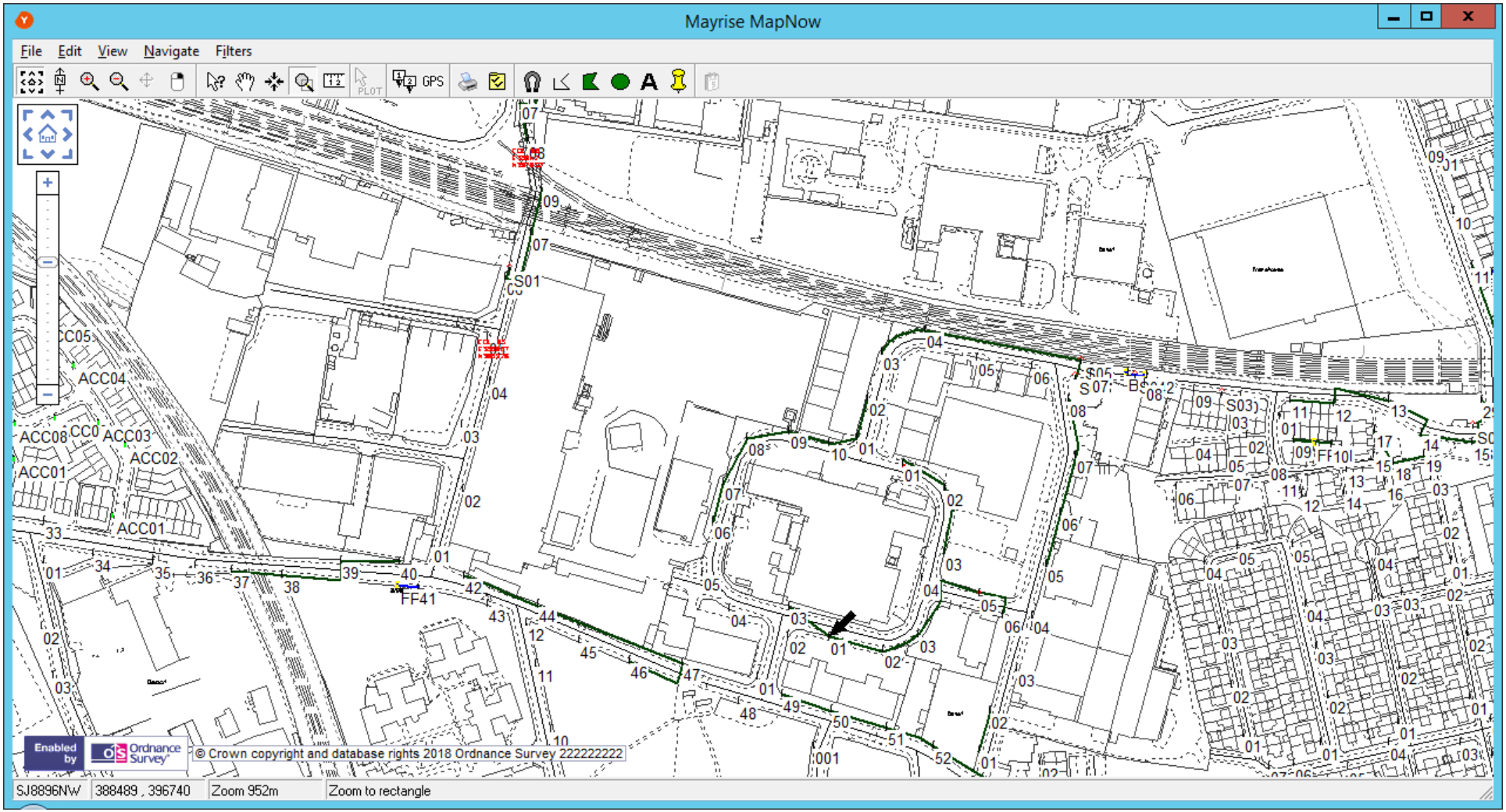
Mayrise MapNow
File
Edit
View
Navigate
Filters
GPS
PLOT
ACC01
ACC02
ACC03
ACC04
ACC05
ACC08
FF41
S01
S03
S05
S07
Enabled by
Ordnance Survey
© Crown copyright and database rights 2018 Ordnance Survey 222222222
SJ8896NW
388489 , 396740
Zoom 952m
Zoom to rectangle

Hannan Associates

MEP Design Solutions

Mechanical | Electrical | Public Health

Hannan Associates, Beta House, Alphagate Drive
Manchester Road, Denton, Manchester, M34 3SH

Tel: (0)161 337 2200 :: Web: www.hannan-uk.com :: Twitter: @hannanassociate

2. Part L2a Compliance Report

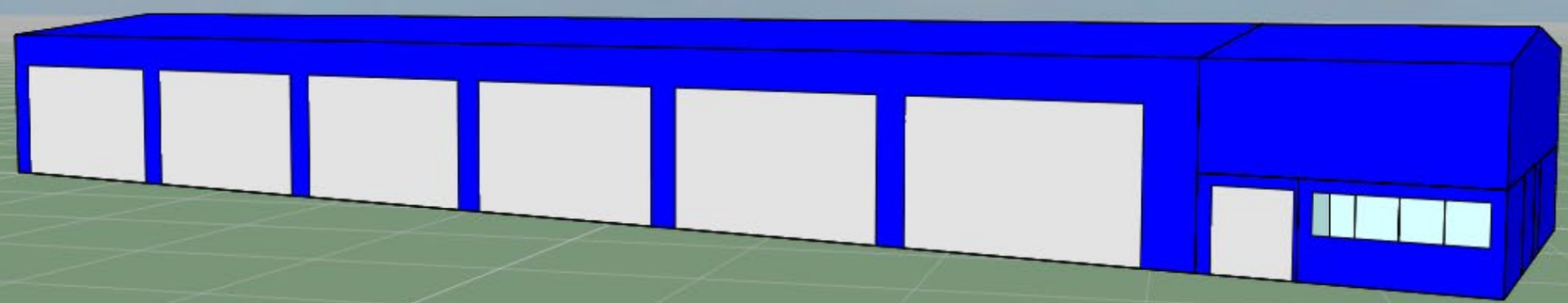

Hannan
Associates
MEP Design Solutions

Hammerstone Road, Gorton
Part L2a 2013 Compliance Report

Ref: HRD-HAN-ZZ-XX-RP-N-001

Issue 01

Last Updated 19th April 2021

Contents

1.0 Introduction
1.1 Part L2A 2013 Compliance Criteria

2.0 Building Form and Geometry
2.1 General Description
2.2 Model Images

3.0 Construction Data
3.1 Building Fabric Summary
3.2 Air Permeability
3.3 Shading Devices

4.0 Weather Data and Site Orientation
4.1 Simulation Weather Data
4.2 Site Orientation

5.0 Room Types and Templates

6.0 Electrical System Details
6.1 Lighting Input Data
6.2 Lighting System Controls

7.0 HVAC System Details
7.1 Low or Zero Carbon (LZC) Systems
7.2 Metering Systems
7.3 IES System Types

8.0 Part L2A 2013 Results and Summary
8.1 Detailed Carbon Output and Energy Summary
8.2 Criterion 1 – Achieving the TER
8.3 Criterion 2 – Limits on Design Flexibility
8.4 Criterion 3 – Limiting the Effects of Heat Gains in Summer
8.5 Preliminary EPC Rating

9.0 As Built Documents

Appendix 1 – BRUKL Document Building Regulations Part L2A 2013

Appendix 2 – Energy Performance Certificate (EPC)

1.0 Introduction

The purpose of this report is to summarise the results of the Part L2A dynamic thermal simulations carried out for the proposed Hammerstone Road redevelopment in Gorton, Manchester.

The Hammerstone Road project consists of the redevelopment and construction of several existing and new buildings. It is therefore necessary to define the Part L and EPC requirements for each area of the proposed development. This has been summarised as follows:

- Locomotive Shed – This is an existing building which is to be refurbished as part of the proposed works. **This portion of the project is therefore assessed under Part L2B and is excluded from this report.**
- Gritter Garage – This is a new building which is to be constructed as part of the proposed works. As the proposed building is conditioned and has a total useful floor area of >50m^2, **there is therefore a requirement for Part L2A (Criterion 1, 2 & 3) and EPC calculations to be carried out for this portion of the project and is included within this report.**
- Grit & Salt Storage Barn – This is a new building which is to be constructed as part of the proposed works. As the proposed building is unconditioned (not heated or cooled) **there is therefore no requirement for Part L2A (Criterion 1, 2 & 3) and EPC calculations to be carried out for this portion of the project and is excluded from this report.**
- Gatehouse – This is a new building which is to be constructed as part of the proposed works. As the proposed building has a total useful floor area of <50m^2, **there is therefore no requirement for Part L2A (Criterion 1 & 3) and EPC calculations to be carried out for this portion of the project and is excluded from this report.** Whilst the gatehouse is not subject to Part L2A (Criterion 1 & 3) & EPC calculations, the building would still need to be constructed in accordance with the minimum standards set out in Part L2a (Criterion 2).
- BIFFA Offices & BIFFA Workshop – These areas are part of the existing Locomotive Shed which is an existing building that is to be refurbished as part of the proposed works. As stated above, these areas are assessed under Part L2B and are excluded from this report. **However, as these areas are to be leased to a single tenant, a single EPC is required to be provided at the point in which the space is leased to a tenant.**
- Sublet Area – Similarly to the BIFFA areas noted above, this area is part of the existing Locomotive Shed which is excluded from this report. **However, this area will require an EPC at the point in which the space is leased to a tenant. This EPC is to be provided by others at the appropriate time.**

The dynamic simulation method (DSM) was used to undertake the main components of this report as below:

- Compliance with Part L2A 2013

The thermal model formed to undertake the dynamic simulations was created using IES Virtual Environment (version 2021.0.2.0) which has the approval of the BRE and is accredited to the requirements of the guidelines as set out in CIBSE publication TM33.

1.1 Part L2A 2013 Compliance Criteria

The following five criteria must be satisfied in order to achieve compliance:

<u>Criterion 1 – Achieving the TER</u>

- The Building CO_2 Emission Rate (BER) must be less than the Target CO_2 Emission Rate (TER).

<u>Criterion 2 – Limits on Design Flexibility</u>

- To avoid poor performing buildings, minimum standards for the building fabric, the controls and the energy efficiency of the building services must be met.

<u>Criterion 3 – Limiting the effects of heat gains in summer</u>

- For each room that is either occupied or comfort cooled the solar gain through the glazing should not exceed limits set by a reference room of the same shape.
- It should be noted that satisfying this criterion is NOT evidence that the internal climate of the building will be comfortable since factors such as internal gains and ventilation provision that will influence comfort are not tested by this criterion.

<u>Criterion 4 – Building performance consistent with the BER</u>

- BER based on the constructed building fabric standard, air permeability test, ductwork leakage test, and the installed controlled services including the commissioned fan performance will identify compliance with this criterion. This must be demonstrated on completion of the building.

<u>Criterion 5 – Provisions for energy-efficient operation of the building</u>

- A building log book has been provided to the owner of the building containing information on the building, the fixed building services and their maintenance. This must be provided on completion of the building.

This report considers the requirements for Criterion 1, 2, and 3 for the proposed development.

Compliance with criterion 4 and 5 can only be demonstrated once the building has been constructed. Criterion 4 is essentially to deal with any gap between the as designed performance of the building, and the as built performance of the building. Criterion 5 ensures the necessary provisions such as a building log book and O&M information, are put in place to enable energy efficient operation of the building.

2.0 Building Form and Geometry

2.1 General Description

Part L2A compliance analysis has been carried out for the Gritter Garage portion of the proposed development. Although shown in the images opposite, for illustrative purposes, the vehicle storage part of the building is unconditioned (not heated or cooled) and has therefore been excluded from this calculation.

The model geometry entered into the IES software is based on external building elevations and internal layouts provided by Fletcher Rae Architects as listed below:

Table 1 - Architect's Drawing List

Drawing Name	Drawing No	Received
Proposed Gritter Garage GA Ground Floor	HRD-FRA-02-00-DR-A-20-2201 Rev C1	18/03/21
Proposed Gritter Garage GA Roof Plan	HRD-FRA-02-RL-DR-A-20-2202 Rev C2	18/03/21
Proposed Gritter Garage GA Elevations	HRD-FRA-02-XX-DR-A-20-2203 Rev C1	18/03/21
Proposed Gritter Garage GA Sections	HRD-FRA-02-XX-DR-A-20-2204 Rev C1	18/03/21
Proposed Winter Maintenance Area Plan	HRD-FRA-02-XX-DR-A-90-2001 Rev C1	18/03/21

2.2 Model Images

Below are images of the proposed gritter garage.

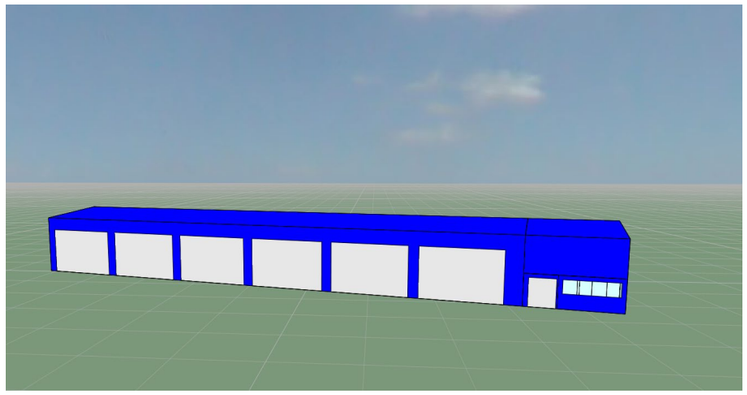

Figure 1 – South Elevation

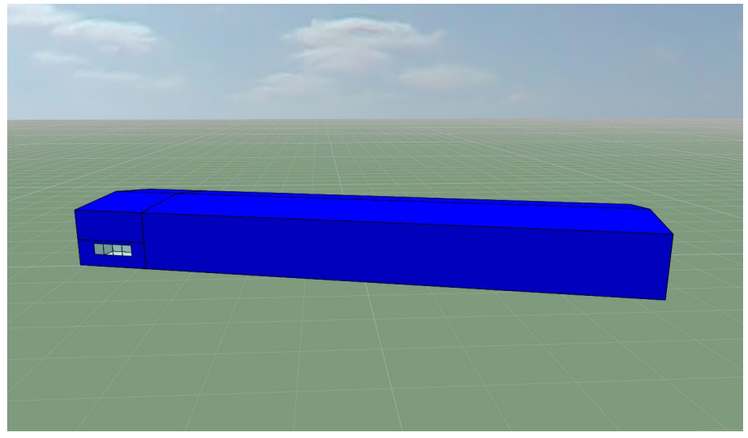

Figure 2 – North Elevation

3.0 Construction Data

This section details the construction data applied within the preliminary Part L model to the geometry shown in Section 2.0.

3.1 Building Fabric Summary

The following u-value details have been used within the model.

Table 2 – Building Fabric

Building Fabric Element	U-value (W/m².k)	G-value	Light Transmittance
Roof	0.18	-	-
Ground/Exposed Floor	0.22	-	-
External Wall	0.23	-	-
Partition Between Welfare Facilities and Gritter Garage	0.23	-	-
Personnel Door	2.20	-	-
External Double Glazing	1.60 – Window (Glass & Frame)	0.40	0.71

3.2 Air Permeability

An air permeability of 3.0 m³/(h.m²) @ 50 Pa has been used within the model.

3.3 Shading Devices

Blinds have not been included within the model.

Shading has been modelled as per the architect's information.

4.0 Weather Data and Site Orientation

4.1 Simulation Weather Data

For Part L2A compliance weather data must be selected from 14 locations within the UK, for the dynamic simulations undertaken in this report, Manchester has been set as the location as this is the nearest Building Regulations 2013 weather data location to the actual site.

Solar shading calculations were undertaken prior to running the dynamic simulations to provide accurate solar gain information. For the site location the following sun path data was used.

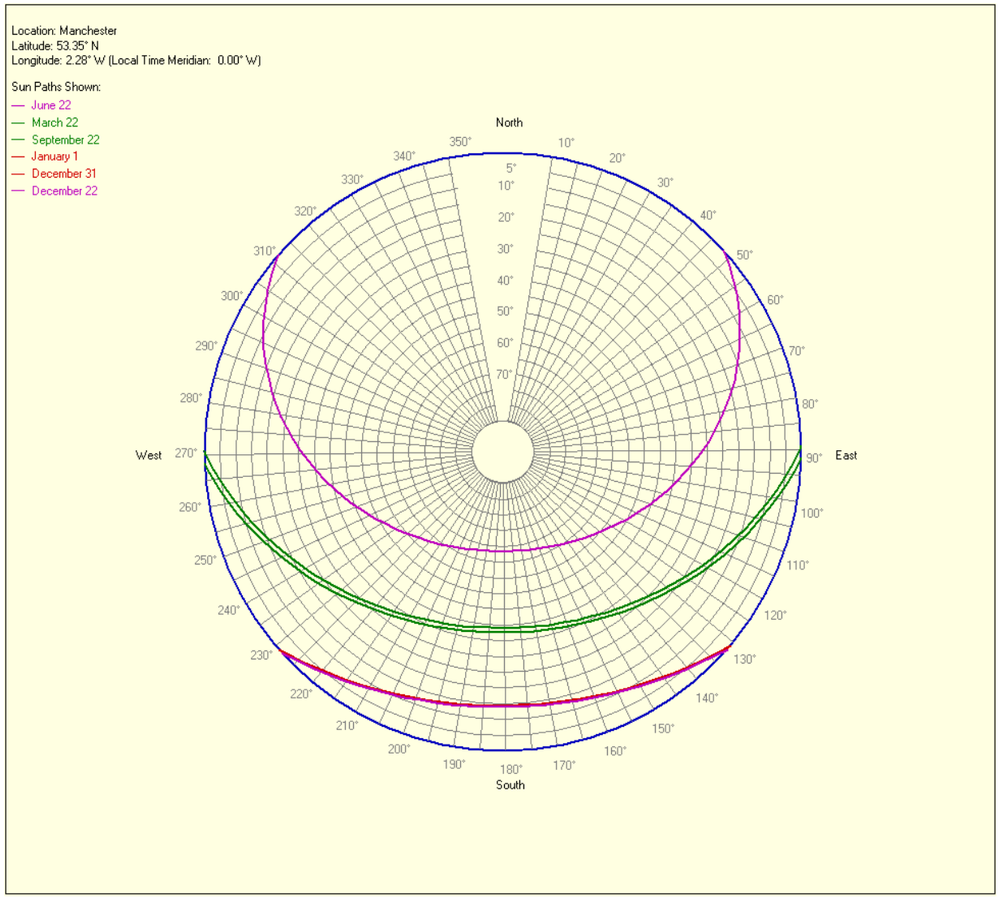

Figure 3 - Sun Path Diagram

4.2 Site Orientation

The site orientation was taken from Fletcher Rae Architects drawings listed within Section 2.0.

5.0 Room Types and Templates

The IES software allows each room within the model to be allocated an activity from the National Calculation Method (NCM) via room-type templates. This determines the room internal gains, usage profiles and ventilation rates from those contained within the NCM activity.

The IES templates created and applied to the preliminary Part L model are as follows:

- Voids & Risers
- Cellular Office
- Circulation area
- Toilet
- Welfare Room

NCM templates have been selected from the building type 'B8: Warehouse/storage (Warehouse)' – under the building category 'Industrial or Storage Building'.

The most appropriate NCM room activity has been selected as shown below:

Table 3 – NCM Room Activity Assignments

IES Room Template	NCM Room Activity
Voids & Risers	Internal void or warm roof
Cellular Office	NCM Ware: Office
Circulation area	NCM Ware: Circulation area
Toilet	NCM Ware: Toilet
Welfare Room	NCM Ware: Office (Warehouse: Tea)

6.0 Electrical System Details

Electric power factor correction of <0.9 has been selected.

Within the applied room templates given in Section 5.0 the lighting system data for each NCM activity may be edited. Below are the details of the data used within the thermal model.

6.1 Lighting Input Data

The values used within the model to determine the luminaire efficacy for each space are shown in Table 4 below.

Table 4 – Lighting Input Data

NCM Type	Lighting Level (lux)	Lamp Efficacy (lm/W)	Light Output Ratio	Installed Power Density (W/m²/(100 lux))
Voids & Risers	N/A	N/A	N/A	N/A
Cellular Office	400	Calculated by IES	1.00	2.00
Circulation area	100	Calculated by IES	1.00	2.50
Toilet	200	Calculated by IES	1.00	2.50
Welfare Room	400	Calculated by IES	1.00	2.00

6.2 Lighting System Controls

For each area given in section 6.1 the controls for the lighting system associated with the area can be edited to reflect the design intent. The following lighting control systems are applied within the Part L model:

Lighting systems have provision for metering but it will not provide any warning of out-of-range values.

Table 5 – Lighting System Controls

NCM Type	Daylight Dimming	Occupancy Sensing	Parasitic Power Density (W/m²)
Voids & Risers	N/A	N/A	N/A
Cellular Office	Yes	Auto-on-off	0.05
Circulation area	No	Auto-on-off	0.05
Toilet	No	Auto-on-off	0.05
Welfare Room	Yes	Auto-on-off	0.05

7.0 HVAC System Details

The IES thermal modelling software allows the input of actual building system data and efficiencies to be used for comparison against the notional building to determine the BER.

The following system types have been used as the basis for thermal modelling of the building:

Voids & Risers	- None
Cellular Office	- DX Split System and Local HRVU
Circulation area	- Electric heating and Natural Infiltration
Toilet	- Electric heating and Mechanical Extract Ventilation
Welfare Room	- DX Split System and Local HRVU
DHW	- Local electric instantaneous hot water heaters

7.1 Low or Zero Carbon (LZC) Systems

Aside from air source heat pumps, no LZC Systems have been included within the thermal model.

7.2 Metering Systems

HVAC systems are accounted to be sub-metered, however, sub-metering systems are not assumed to warn for out-of-range readings.

7.3 IES System Types

For each of the above system types the following efficiencies and input data has been entered into the Part L model:

Table 6 – DX Split System and Local HRVU

Split or multi-split VRF system					
Heating	**Cooling**	**Ventilation†**			**Air leakage**
Heat pump: SCOP: 2.7955	Heat pump: SSEER: 2.4850	Mech vent system SFP 1.80 W/l/s	Heat Recovery Efficiency: 0.70	Ventilation rate: NCM	AHU: Class L2

Table 7 – Electric Heating and Natural Infiltration

GENERIC Heating only – Electric resistance		
Heating	**Cooling**	**Ventilation**
Electricity: 100% efficient	N/A	N/A

Table 8 – Electric Heating and Mechanical Extract Ventilation

GENERIC Heating only – Electric resistance		
Heating	**Cooling**	**Ventilation**
Electricity: 100% efficient	N/A	Zonal Extract System

Table 9 – DHW System Details

Local Electric Instantaneous Hot Water Heaters		
Efficiency	**Storage Volume**	**Storage losses**
Electricity: 100% efficient	N/A	N/A

Table 10 – Mechanical Extract Details

Room Type	SFP (W/l/s)	Ventilation Rate
Toilet	0.50	8 ACH

8.0 Part L2A 2013 Results and Summary

8.1 Detailed Carbon Output and Energy Summary

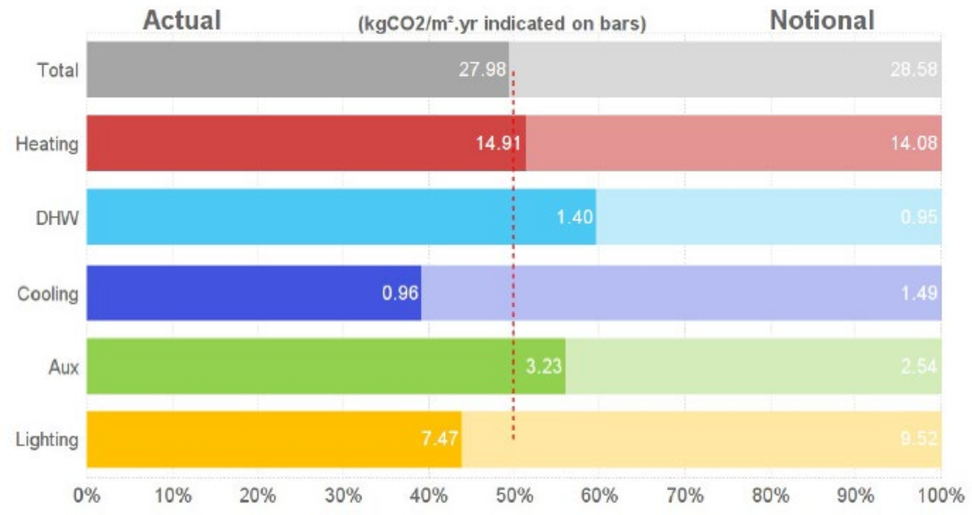

Figure 4 – Carbon Output

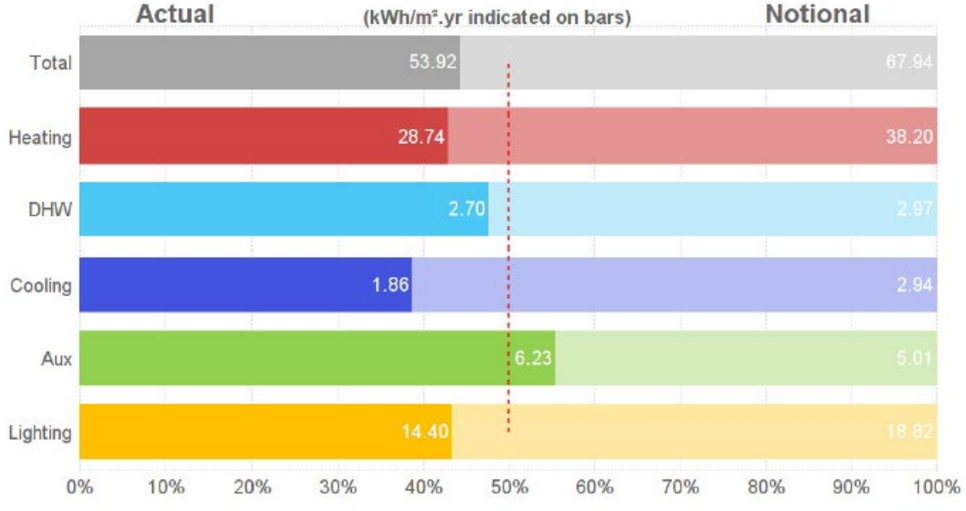

Figure 5 – Energy Summary

8.2 Criterion 1 – Achieving the TER

The following table details the results gained from the thermal model based upon the indicative details contained previously within this report.

The BER is less than the TER and therefore passes Criterion 1 of Part L2A 2013 of the Building Regulations.

Note these results are indicative only. The contractor is responsible for providing the final 'as-built' BRUKL document.

All BRUKL documents will be generated using the latest software at the time of issue and therefore the results stated at this stage cannot be guaranteed.

Table 11 – Criterion 1 BER

TER ($kg.CO_2/m^2$)	BER ($kg.CO_2/m^2$)	Part L2A Criterion 1 Pass / Fail
28.6	28.0	Pass

8.3 Criterion 2 – Limits on Design Flexibility

Criterion 2 places restrictions on the energy efficiency of fabric elements and fixed building services.

HVAC system selections satisfy the minimum efficiency levels described in the Non-Domestic Building Services Compliance Guide 2013. All fabric elements and lighting designs are also specified to satisfy Criterion 2.

8.4 Criterion 3 – Limiting the Effects of Heat Gains in Summer

The preliminary Part L assessments that have been carried out indicate that all areas pass Criterion 3.

It should be noted that compliance with Criterion 3 is not mandatory.

8.5 Preliminary EPC Rating

The following table details the results gained from the thermal model based upon the indicative details contained previously within this report.

Table 12 – EPC Rating

Indicative EPC Rating
B – 41

Note these results are indicative only. The contractor is responsible for providing the final 'as-built' EPC document.

All EPC documents will be generated using the latest software at the time of issue and therefore the results stated at this stage cannot be guaranteed.

9.0 As Built Documents

The final ‘As-Built’ EPC and BRUKL documents will be produced at Practical Completion and will be based on the final building design and installed services. They will be generated using the latest software at the time of issue and therefore the results stated at this stage cannot be guaranteed.

It will be the responsibility of the Main Contractor to comply with Part L2A of the Building Regulations and to provide the ‘As Built’ documents.

Appendix 1 – BRUKL Document Building Regulations Part L2A 2013

BRUKL Output Document

HM Government

Compliance with England Building Regulations Part L 2013

Project name

Gritter Garage Hammerstone Road

As designed

Date: Fri Apr 16 16:37:46 2021

Administrative information

Building Details

Address: Gritter Garage, Hammerstone Road, Gorton, Manchester,

Certification tool

Calculation engine: Apache

Calculation engine version: 7.0.13

Interface to calculation engine: IES Virtual Environment

Interface to calculation engine version: 7.0.13

BRUKL compliance check version: v5.6.b.0

Certifier details

Name: Hannan Associates

Telephone number: 0161 337 2200

Address: Beta House, Alphagate Drive, Denton, Manchester, M34 3SH

Criterion 1: The calculated CO_2 emission rate for the building must not exceed the target

CO_2 emission rate from the notional building, $kgCO_2/m^2.annum$	28.6
Target CO_2 emission rate (TER), $kgCO_2/m^2.annum$	28.6
Building CO_2 emission rate (BER), $kgCO_2/m^2.annum$	28
Are emissions from the building less than or equal to the target?	BER =< TER
Are as built details the same as used in the BER calculations?	Separate submission

Criterion 2: The performance of the building fabric and fixed building services should achieve reasonable overall standards of energy efficiency

Values which do not achieve the standards in the Non-Domestic Building Services Compliance Guide and Part L are displayed in red.

Building fabric

Element	$U_{a\text{-}Limit}$	$U_{a\text{-}Calc}$	$U_{i\text{-}Calc}$	Surface where the maximum value occurs*
Wall**	0.35	0.23	0.23	RM000001:Surf[1]
Floor	0.25	0.22	0.22	RM000001:Surf[0]
Roof	0.25	0.18	0.18	WL000002:Surf[2]
Windows***, roof windows, and rooflights	2.2	1.6	1.6	RM000003:Surf[2]
Personnel doors	2.2	2.2	2.2	RM000006:Surf[0]
Vehicle access & similar large doors	1.5	-	-	No Vehicle access doors in building
High usage entrance doors	3.5	-	-	No High usage entrance doors in building

$U_{a\text{-}Limit}$ = Limiting area-weighted average U-values [$W/(m^2K)$]

$U_{a\text{-}Calc}$ = Calculated area-weighted average U-values [$W/(m^2K)$]

$U_{i\text{-}Calc}$ = Calculated maximum individual element U-values [$W/(m^2K)$]

* There might be more than one surface where the maximum U-value occurs.

** Automatic U-value check by the tool does not apply to curtain walls whose limiting standard is similar to that for windows.

*** Display windows and similar glazing are excluded from the U-value check.

N.B.: Neither roof ventilators (inc. smoke vents) nor swimming pool basins are modelled or checked against the limiting standards by the tool.

Air Permeability	Worst acceptable standard	This building
$m^3/(h.m^2)$ at 50 Pa	10	3

Building services

The standard values listed below are minimum values for efficiencies and maximum values for SFPs. Refer to the Non-Domestic Building Services Compliance Guide for details.

Whole building lighting automatic monitoring & targeting with alarms for out-of-range values	NO
Whole building electric power factor achieved by power factor correction	<0.9

1- Electric Panel Heaters with Mechanical Extract Ventilation - WCs

	Heating efficiency	Cooling efficiency	Radiant efficiency	SFP [W/(l/s)]	HR efficiency
This system	1	-	0	0.5	-
Standard value	N/A	N/A	N/A	1.1^	N/A
Automatic monitoring & targeting with alarms for out-of-range values for this HVAC system					NO
^ Limiting SFP may be extended by the amounts specified in the Non-Domestic Building Services Compliance Guide if the system includes additional components as listed in the Guide.					

2- DX Split & Local HRVU - Office and Welfare

	Heating efficiency	Cooling efficiency	Radiant efficiency	SFP [W/(l/s)]	HR efficiency
This system	3	3.5	0	0	0.7
Standard value	2.5*	2.6	N/A	N/A	0.5
Automatic monitoring & targeting with alarms for out-of-range values for this HVAC system					NO
* Standard shown is for all types >12 kW output, except absorption and gas engine heat pumps. For types <=12 kW output, refer to EN 14825 for limiting standards.					

3- Electric Panel Heaters - Lobby

	Heating efficiency	Cooling efficiency	Radiant efficiency	SFP [W/(l/s)]	HR efficiency
This system	1	-	0	0	-
Standard value	N/A	N/A	N/A	N/A	N/A
Automatic monitoring & targeting with alarms for out-of-range values for this HVAC system					NO

1- DHW - Local Electric

	Water heating efficiency	Storage loss factor [kWh/litre per day]
This building	1	-
Standard value	1	N/A

Local mechanical ventilation, exhaust, and terminal units

ID	System type in Non-domestic Building Services Compliance Guide
A	Local supply or extract ventilation units serving a single area
B	Zonal supply system where the fan is remote from the zone
C	Zonal extract system where the fan is remote from the zone
D	Zonal supply and extract ventilation units serving a single room or zone with heating and heat recovery
E	Local supply and extract ventilation system serving a single area with heating and heat recovery
F	Other local ventilation units
G	Fan-assisted terminal VAV unit
H	Fan coil units
I	Zonal extract system where the fan is remote from the zone with grease filter

Zone name	SFP [W/(l/s)]									HR efficiency	
ID of system type	**A**	**B**	**C**	**D**	**E**	**F**	**G**	**H**	**I**		
Standard value	0.3	1.1	0.5	1.9	1.6	0.5	1.1	0.5	1	**Zone**	**Standard**
Unisex WC	-	-	0.5	-	-	-	-	-	-	-	N/A
Office	-	-	-	1.8	-	-	-	-	-	-	N/A

Zone name	SFP [W/(l/s)]									HR efficiency	
ID of system type	A	B	C	D	E	F	G	H	I		
Standard value	0.3	1.1	0.5	1.9	1.6	0.5	1.1	0.5	1	Zone	Standard
Welfare Room	-	-	-	1.8	-	-	-	-	-	-	N/A

General lighting and display lighting	Luminous efficacy [lm/W]			
Zone name	Luminaire	Lamp	Display lamp	General lighting [W]
Standard value	60	60	22	
Unisex WC	-	110	-	19
Accessible WC & Shower	-	83	-	35
Office	87	-	-	127
Lobby	-	68	-	60
Welfare Room	80	-	-	264

Criterion 3: The spaces in the building should have appropriate passive control measures to limit solar gains

Zone	Solar gain limit exceeded? (%)	Internal blinds used?
Office	NO (-73.7%)	NO
Welfare Room	NO (-87.8%)	NO

Criterion 4: The performance of the building, as built, should be consistent with the calculated BER

Separate submission

Criterion 5: The necessary provisions for enabling energy-efficient operation of the building should be in place

Separate submission

EPBD (Recast): Consideration of alternative energy systems

Were alternative energy systems considered and analysed as part of the design process?	YES
Is evidence of such assessment available as a separate submission?	NO
Are any such measures included in the proposed design?	YES

Technical Data Sheet (Actual vs. Notional Building)

Building Global Parameters

	Actual	Notional
Area [m^2]	83.8	83.8
External area [m^2]	305.3	305.3
Weather	MAN	MAN
Infiltration [m^3/hm^2@ 50Pa]	3	6
Average conductance [W/K]	83.09	107.23
Average U-value [W/m^2K]	0.27	0.35
Alpha value* [%]	12.75	10

* Percentage of the building's average heat transfer coefficient which is due to thermal bridging

Building Use

% Area	Building Type
	A1/A2 Retail/Financial and Professional services
	A3/A4/A5 Restaurants and Cafes/Drinking Est./Takeaways
	B1 Offices and Workshop businesses
	B2 to B7 General Industrial and Special Industrial Groups
100	**B8 Storage or Distribution**
	C1 Hotels
	C2 Residential Institutions: Hospitals and Care Homes
	C2 Residential Institutions: Residential schools
	C2 Residential Institutions: Universities and colleges
	C2A Secure Residential Institutions
	Residential spaces
	D1 Non-residential Institutions: Community/Day Centre
	D1 Non-residential Institutions: Libraries, Museums, and Galleries
	D1 Non-residential Institutions: Education
	D1 Non-residential Institutions: Primary Health Care Building
	D1 Non-residential Institutions: Crown and County Courts
	D2 General Assembly and Leisure, Night Clubs, and Theatres
	Others: Passenger terminals
	Others: Emergency services
	Others: Miscellaneous 24hr activities
	Others: Car Parks 24 hrs
	Others: Stand alone utility block

Energy Consumption by End Use [kWh/m^2]

	Actual	Notional
Heating	28.74	38.2
Cooling	1.86	2.94
Auxiliary	6.23	5.01
Lighting	14.4	18.82
Hot water	2.7	2.97
Equipment*	31.99	31.99
TOTAL**	**53.92**	**67.94**

* Energy used by equipment does not count towards the total for consumption or calculating emissions.
** Total is net of any electrical energy displaced by CHP generators, if applicable.

Energy Production by Technology [kWh/m^2]

	Actual	Notional
Photovoltaic systems	0	0
Wind turbines	0	0
CHP generators	0	0
Solar thermal systems	0	0

Energy & CO_2 Emissions Summary

	Actual	Notional
Heating + cooling demand [MJ/m^2]	168.42	220.48
Primary energy* [kWh/m^2]	165.54	144.6
Total emissions [kg/m^2]	28	28.6

* Primary energy is net of any electrical energy displaced by CHP generators, if applicable.

HVAC Systems Performance

System Type		Heat dem MJ/m2	Cool dem MJ/m2	Heat con kWh/m2	Cool con kWh/m2	Aux con kWh/m2	Heat SSEEF	Cool SSEER	Heat gen SEFF	Cool gen SEER
[ST] Central heating using air distribution, [HS] Direct or storage electric heater, [HFT] Electricity, [CFT] Electricity										
	Actual	171.3	0	47.6	0	14.4	1	0	1	0
	Notional	203	0	65.4	0	22.8	0.86	0	----	----
[ST] Central heating using air distribution, [HS] Direct or storage electric heater, [HFT] Electricity, [CFT] Electricity										
	Actual	189.3	0	52.6	0	0	1	0	1	0
	Notional	212	0	68.3	0	0	0.86	0	----	----
[ST] Split or multi-split system, [HS] Heat pump (electric): air source, [HFT] Electricity, [CFT] Electricity										
	Actual	129	28.5	12.8	3.2	7.5	2.8	2.49	3	3.5
	Notional	159.7	68.8	17.3	5	3.6	2.56	3.79	----	----
[ST] No Heating or Cooling										
	Actual	0	0	0	0	0	0	0	0	0
	Notional	0	0	0	0	0	0	0	----	----

Key to terms

Heat dem [MJ/m2] = Heating energy demand
Cool dem [MJ/m2] = Cooling energy demand
Heat con [kWh/m2] = Heating energy consumption
Cool con [kWh/m2] = Cooling energy consumption
Aux con [kWh/m2] = Auxiliary energy consumption
Heat SSEFF = Heating system seasonal efficiency (for notional building, value depends on activity glazing class)
Cool SSEER = Cooling system seasonal energy efficiency ratio
Heat gen SSEFF = Heating generator seasonal efficiency
Cool gen SSEER = Cooling generator seasonal energy efficiency ratio
ST = System type
HS = Heat source
HFT = Heating fuel type
CFT = Cooling fuel type

Key Features

The Building Control Body is advised to give particular attention to items whose specifications are better than typically expected.

Building fabric

Element	$U_{i\text{-}Typ}$	$U_{i\text{-}Min}$	Surface where the minimum value occurs*
Wall	0.23	0.23	RM000001:Surf[1]
Floor	0.2	0.22	RM000001:Surf[0]
Roof	0.15	0.18	WL000002:Surf[2]
Windows, roof windows, and rooflights	1.5	1.6	RM000003:Surf[2]
Personnel doors	1.5	2.2	RM000006:Surf[0]
Vehicle access & similar large doors	1.5	-	No Vehicle access doors in building
High usage entrance doors	1.5	-	No High usage entrance doors in building

$U_{i\text{-}Typ}$ = Typical individual element U-values [W/(m²K)] $U_{i\text{-}Min}$ = Minimum individual element U-values [W/(m²K)]

* There might be more than one surface where the minimum U-value occurs.

Air Permeability	Typical value	This building
m³/(h.m²) at 50 Pa	5	3

Appendix 2 – Energy Performance Certificate (EPC)

Energy Performance Certificate

Non-Domestic Building

HM Government

Gritter Garage
Hammerstone Road
Gorton
Manchester

Certificate Reference Number:
0687-5187-1949-5994-5584

This certificate shows the energy rating of this building. It indicates the energy efficiency of the building fabric and the heating, ventilation, cooling and lighting systems. The rating is compared to two benchmarks for this type of building: one appropriate for new buildings and one appropriate for existing buildings. There is more advice on how to interpret this information in the guidance document *Energy Performance Certificates for the construction, sale and let of non-dwellings* available on the Government's website at www.gov.uk/government/collections/energy-performance-certificates.

Energy Performance Asset Rating

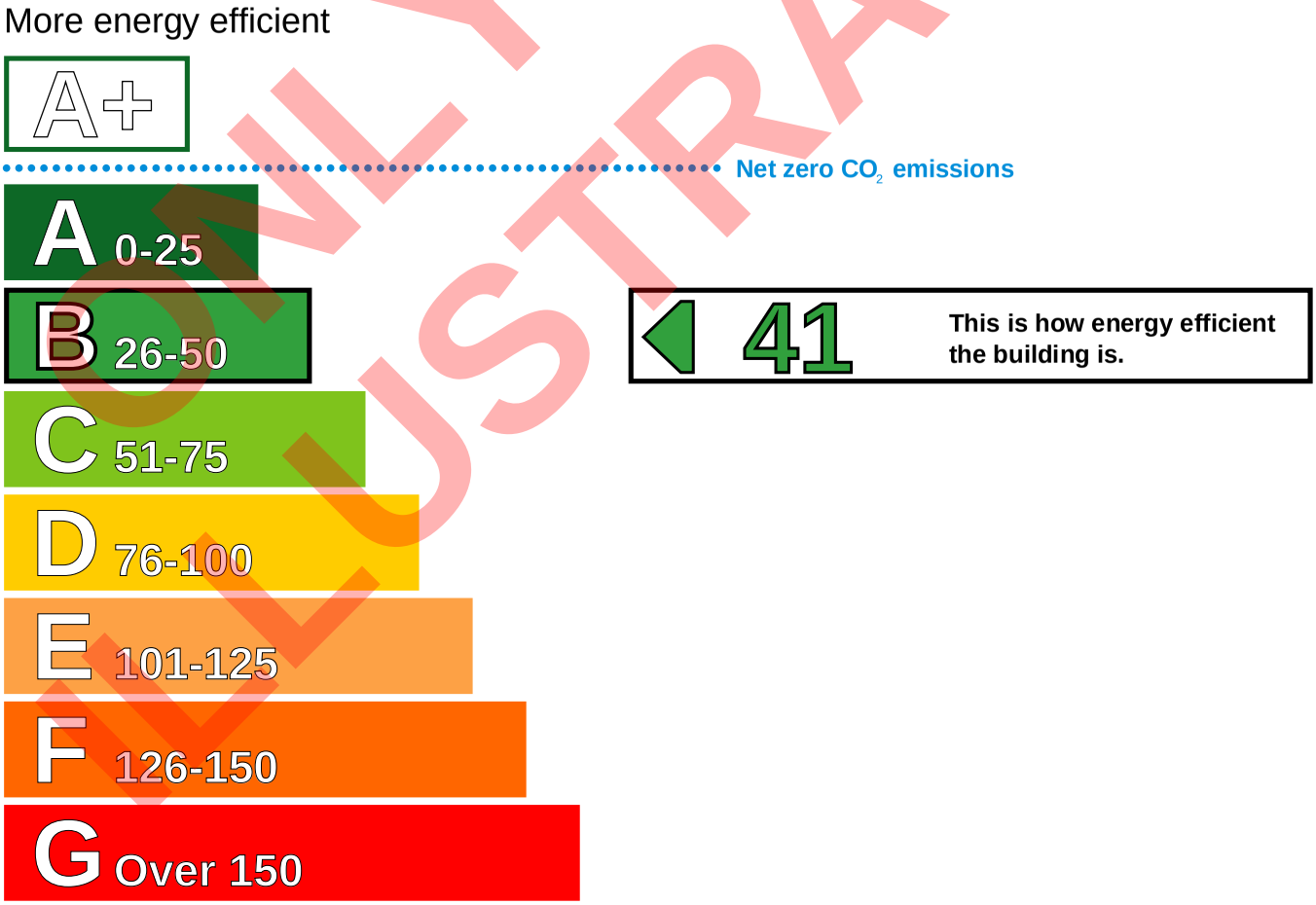

Technical information

Main heating fuel:	Grid Supplied Electricity
Building environment:	Air Conditioning
Total useful floor area (m^2):	83.820
Building complexity:	Level 5
Building emission rate ($kgCO_2/m^2$ per year):	27.98
Primary energy use (kWh/m^2 per year):	165.54

Benchmarks

Buildings similar to this one could have ratings as follows:

42 If newly built

113 If typical of the existing stock

ONLY FOR ILLUSTRATION

Administrative information

This is an Energy Performance Certificate as defined in the Energy Performance of Buildings Regulations 2012 as amended.

Assessment Software:	Virtual Environment v7.0.13 using calculation engine ApacheSim v7.0.13
Property Reference:	UPRN-000000000000
Assessor Name:	Hannan Associates
Assessor Number:	ABCD123456
Accreditation Scheme:	Information not available
Assessor Qualifications:	NOS5
Employer/Trading Name:	Hannan Associates
Employer/Trading Address:	Beta House, Alphagate Drive, Denton, Manchester, M34 3SH
Issue Date:	16 Apr 2021
Valid Until:	15 Apr 2031 (unless superseded by a later certificate)
Related Party Disclosure:	Not related to the owner

Recommendations for improving the energy performance of the building are contained in the associated Recommendation Report: 0780-8973-3698-9256-7842

About this document and the data in it

This document has been produced following an energy assessment undertaken by a qualified Energy Assessor, accredited by Information not available. You can obtain contact details of the Accreditation Scheme at Information not available.

A copy of this certificate has been lodged on a national register as a requirement under the Energy Performance of Buildings Regulations 2012 as amended. It will be made available via the online search function at www.ndepcregister.com. The certificate (including the building address) and other data about the building collected during the energy assessment but not shown on the certificate, for instance heating system data, will be made publicly available at www.opendatacommunities.org.

This certificate and other data about the building may be shared with other bodies (including government departments and enforcement agencies) for research, statistical and enforcement purposes. For further information about how data about the property are used, please visit www.ndepcregister.com. To opt out of having information about your building made publicly available, please visit www.ndepcregister.com/optout.

There is more information in the guidance document *Energy Performance Certificates for the construction, sale and let of non-dwellings* available on the Government website at: www.gov.uk/government/collections/energy-performance-certificates. It explains the content and use of this document and advises on how to identify the authenticity of a certificate and how to make a complaint.

Opportunity to benefit from a Green Deal on this property

The Green Deal can help you cut your energy bills by making energy efficiency improvements at no upfront costs. Use the Green Deal to find trusted advisors who will come to your property, recommend measures that are right for you and help you access a range of accredited installers. Responsibility for repayments stays with the property - whoever pays the energy bills benefits so they are responsible for the payments.

To find out how you could use Green Deal finance to improve your property please call 0300 123 1234.

ONLY FOR ILLUSTRATION

Hannan
Associates
MEP Design Solutions

Mechanical | Electrical | Public Health

Hannan Associates, Beta House, Alphagate Drive
Manchester Road, Denton, Manchester, M34 3SH

Tel: (0)161 337 2200 :: Web: www.hannan-uk.com :: Twitter: @hannanassociate

Volume 6 – Quotations

1. Electricity Supply Quotation – ENWL
2. New Gas Supply Quotation (To follow)
3. New Water Supply Quotation (To follow)
4. Utilities Tracker
5. L.V. Switchboard Quotation – Schneider Electric (To Follow)

Mr Colin Burns
Hannan Associates
Alpha gate Drive
Denton
Manchester
M34 3SH

Electricity North West
Frederick Road
Salford
M6 6QH
Web: www.enwl.co.uk

Our Ref: 5500143364/C

T: 0800-195-4141
DD: 08433114378
E: michelle.range@enwl.co.uk

09 February 2021

Dear Mr Colin Burns

Re: New Supply for Hammerstone Rd, Manchester, M18 8EQ

Thank you for your recent enquiry, I am pleased to provide you with our offer to carry out this work. This offer includes a Statutory Quotation where Electricity North West completes all the works (Option 1), and an option for you to employ an Independent Connection Provider (ICP) to carry out the contestable element of the work (Option 2). You should only accept one of these options when returning the Acceptance Form.

Option 1 – Electricity North West complete all works
Our price for carrying out the statutory works, detailed in the enclosed Project Specification, is £69,312.08 plus VAT of £13,862.42 totalling £83,174.50.

Option 2 – Electricity North West complete the Non Contestable works only
Our price for carrying out the non-contestable works associated with an ICP installed asset is £12,800.87 plus VAT of £2,560.17 totalling £15,361.04. If you accept this option, the attached project specification will not be applicable and it will be necessary to issue a Point of Connection (POC) Project Specification.

The quotation is valid for a period of 180 days from the date of this letter. A detailed price breakdown can be found on the following pages.

The works and the assumptions made in calculating our price are based on your application and are detailed in the Project Specification. Please take time to read through and check these details and should you wish to make any amendments please notify us at the earliest opportunity.

Any work carried out is subject to Electricity North West General Conditions of Contract and the Project Specification.
A full copy of the Electricity North West Limited General Conditions of Contract (business) can be viewed at http://www.enwl.co.uk/our-services/connection-services/help-faqs/terms-and-conditions. If you are unable to access the internet please contact us on 0800 048 1820 and we will post a copy to you.

There is a new Competition in Connections Code of Practice that came into effect on the 30th October 2015. This policy enables third party connectors to undertake more activities associated with a new connection. Further details can be found on our website.

If you wish to proceed, please return the following by email to connectionsdelivery@enwl.co.uk or by post to the address above.

- Customer Acceptance Form, with the relevant section completed.
- Payment for the full amount of the price stated including VAT at the appropriate rate by cheque payable to Electricity North West Limited or BACS / CHAPS transfer.

Alternatively please contact us to discuss the possibility of stage payments. We would like to thank you for your valued enquiry and look forward to working closely with you in due course. If you require any further assistance please do not hesitate to contact me.

Yours sincerely

M. L. Range

Michelle Range
Electricity North West

Description of the works

The charges included are for the provision of a new or existing Electricity North West Distribution Substation and associated infrastructure:

- Only nominal costs for legal consents have been included
- Supply & Installation of substation HV/LV switchgear & earth mat.
- Installation of HV/LV infrastructure.
- Termination of incoming HV cable/s & outgoing LV cables.
- Remote LV metering panel & multicore cable.
- HV shutdown to commission substation.
- Disconnection of existing service/s & infrastructure after new supply is energised.
- For additional bespoke information, please refer to the project specification.

The charges do not include for:

- Land acquisition costs for legal consents etc
- Clearing the site of trees, vegetation etc for substation construction / access.
- Substation civil works e.g. Plinths / base for GRP enclosure.
- Provision of metering room.
- Installation of cable entry duct from the substation to your land boundary.
- The provision and installation of a cable entry duct for new service/s.
- Alterations to your private network, e.g. wiring back existing supplies
- The provision and the installation of your LV singles and earth cables, including termination lugs.
- Out of hours working.

Quotation price

The quotation price is provided based upon your application and the information you provided. The charges for Option 1 are based upon Electricity North West completing both the non contestable and contestable construction works.

Non Contestable Charges

If you require a full description of the non contestable charges these can be viewed on our website http://www.enwl.co.uk/our-services/connection-services/help-faqs/useful-information/common-charging-methodology. If you are unable to access the internet please contact us on 0800 048 1820 and we will post a copy to you.

Determinations

We hope you are satisfied with the service Electricity North West has provided and hope that any possible disputes have been resolved satisfactorily. However if a situation should arise and we are unable to reach a mutually acceptable solution, you can contact The Energy Ombudsman, who will assist in resolving the dispute. You can contact The Energy Ombudsman in writing to PO BOX 966, Warrington, WA4 9DF, by telephone on 0845 055 0760 or online at www.energy-ombudsman.org.uk

BREAKDOWN OF CHARGES (Option 1)

Non Contestable Charges		
Connection Charges	**Quantity**	**Charge**
Assessment & Design Charges	1	£4,730.00
Legal - Ind/com Way/easement developer/3rd party	1	£1,090.00
Inspection Charges	4	£280.00
Connections – Construction Work		
Disconnections/Plant Removal	1	£1,041.18
Sundry Equipment	1	£5,263.20
Labels & Nameplates	1	£647.29
Other charges		
Local Authority Permit Charges	1	£469.20
Total Non Contestable Charge		**£13,520.87**

Contestable Charges		
Connections – Construction Work	**Quantity**	**Charge**
Underground		
HV &/or LV Cable Installation	14	£1,320.25
Substation & Switchgear Installation	1	£31,882.42
Joints, Joint Holes & Terminations	16	£12,624.09
Sundry Equipment	2	£9,476.48
Other charges		
Local Authority Permit Charges	1	£487.97
Total Contestable Charge		**£55,791.21**
Option 1 Total Charge		**£69,312.08**

BREAKDOWN OF CHARGES (Option 2)

Non Contestable Charges		
Connection Charges	**Quantity**	**Charge**
Assessment Charges	1	£2,990.00
Design Charges	1	£1,300.00
Legal - Ind/com Way/easement developer/3rd party	1	£1,090.00
Connections – Construction Work		
Disconnections/Plant Removal	1	£1,041.18
Sundry Equipment	1	£5,263.20
Labels & Nameplates	1	£647.29
Other charges		
Local Authority Permit Charges	1	£469.20
Total Non Contestable Charge		**£12,800.87**
Option 2 Total Charge		**£12,800.87**

Option 2 Quotation

This quotation provides for all the contestable works associated with option A being completed by an Independent Connections Provider (ICP). It will be your responsibility to assess and appoint an ICP who has the required accreditations to carry out the works.

A full list of accredited independent contractors can be found on the NERS website http://www.lr.org/en/utilities-building-assurance-schemes/uk-schemes/national-electricity-registration-scheme/ *Please refer to Option 1 for a breakdown of Contestable Diversion / Reinforcement works associated with Option 2,

CUSTOMER ACCEPTANCE FORM

Customer: Hannan Associates

Our Ref: 5500143364/C

Project title: New Supply for Hammerstone Rd

Site address: Manchester,M18 8EQ

I accept your quotation Option 1, dated 09 February 2021 for the works referenced above and any subsequent charges, as detailed in the project specification.

*I agree to pay £69,312.08 plus VAT of £13,862.42 totalling £83,174.50 and Payment for the full amount.

I acknowledge and agree that the works are subject to the Electricity North West General Conditions of Contract, a copy of which I have read.

I acknowledge that I must appoint an electricity supplier to the site before the connection/s can be made live.

The site will be ready for Electricity North West to commerce works on _____ (**please enter date**).
However I have read and understand clause 7 of the Electricity North West General Conditions of Contract, in relation to commencement of the works.

Option 1 - Acceptance	**Total Cost Payable = £83,174.50**
Signature of customer or authorised signatory on behalf of customer:	
Date:	

I accept your quotation Option 2, dated 09 February 2021 for the Non Contestable works only.

I agree to employ a suitably accredited third party contractor to carry out the design and construction activities.

*I agree to pay £12,800.87 plus VAT £2,560.17 totalling £15,361.04 and payment of full amount.

I acknowledge and agree that the completion of non-contestable activities is subject to the Electricity North West General Conditions of Contract, a copy of which I have read.

I acknowledge that I must appoint an electricity supplier to the site before the connection/s can be made live.

Option 2 - Acceptance	**Total Cost Payable = £15,361.04**
Signature of customer or authorised signatory on behalf of customer:	
Date:	

PLEASE ACCEPT ONLY ONE OPTION

Acceptance must include payment by cheque, made payable to Electricity North West Limited or by BACS/CHAPS in accordance with the guidance available on our website via the following 'link'

Additional details required upon acceptance:

End User Details*		**Wayleave Details (if different to End User) ****	
Company/Customer Name :	_____	Landowners Name :	_____
Customer Contact:	_____	Landowners Contact:	_____
Customer Telephone:	_____	Landowners Telephone:	_____
Full Postal Addresss:	_____	Full Postal Addresss:	_____
	_____		_____
	_____		_____
	_____		_____
	_____		_____
* If there are multiple End Users, please provide additional details.		**If there are multiple Landowners, please provide additional details.	

Site Contact Details (if different to End User)	
Name:.....	Contact No:.....

PROJECT SPECIFICATION

Connections

1) The following details are based upon your application:
   - Total load requirement of your connections is 1,000kVA and consists of:

   Install 1 x low voltage singles supply direct from the LV cabinet / board.

   Quotation is subject to the new supply remaining both physically and electrically sperate from any other supply on the site.
   This quotation includes for a standard earth mat, if the final earthing assessment results in a more complex earth design being required, additional costs will be charged to you.

General

1) A fully detailed specification of our requirements (including any necessary drawings) will be sent to you on acceptance of our quote. It is essential that you work in accordance with our drawings and programme requirements.

2) You are required to provide safe access and a safe working environment for all parties working on behalf of Electricity North West Limited, on site, including making sure the site is free of obstructions and temporary structures (including scaffolding) within the working area.

3) We shall, as a basic requirement of your connection, provide you with a minimum cost design scheme to facilitate your connection request. If a higher design specification is to be used then any works carried out, which are above the minimum cost design scheme shall be subject to a full connection charge payment (shown in the breakdown of charges), inclusive of Operation & Maintenance charges, as per Electricity North West Limited Licence Condition 13.

4) All on site / off site work is based on the most practical route to the point of connection. We reserve the right to amend our price should the Local Highways Authority or private landowners decline permissions.

5) We reserve the right to carry out a joint inspection to review if the site is suitable for our works to commence, including inspections of any excavation, ducting or civil works.

6) We reserve the right to amend our price should any unforeseen engineering difficulties arise.

7) If no one is on site to accept and sign for receipt of goods, our suppliers will leave the materials (including ducting) on site. This will qualify as delivery and we reserve the right to charge you for any replacement order of materials lost, damaged or stolen in this case.

8) We reserve right to charge for any abortive visits to site.

9) Any diversions (other than those identified) due to you or your agents altering existing cables routes or depth of cover will be determined after carrying out trial holes to establish cable position and depths. If work is required this will be fully chargeable to you.

10) If any new work is being under taken within the site area (including your proposed site entrance) you must provide trial holes for measurements to be taken of the depth of the existing cables. If work is required to alter the cover of any existing cables the cost will be charged to you.

Excavation

1) Our price for the relative works are based on the assumption that all underground cable trenching carried out by Electricity North West will be in surfaces as detailed below. Should the surface/grounding of any of the cable route change before works are completed you may be required to pay for any extra associated excavation costs.

   Contestable HV &/or LV cable connection works:

   - 5 metres in finished footpath.

2) In order to prevent abortive visits your site supervisor will ensure the site will be ready.

3) In order to minimise the time any excavation undertaken by you is open you are to liaise with our representative to ensure that our necessary labour, plant, and materials will be available, prior to commencement of the excavation.

4) All on-site excavation, reinstatement, compaction and final landscaping, will be your responsibility unless otherwise specified by us.

5) All trenches will be back filled with suitable base material. Should we require any imported materials for back filling then additional charges will apply.

6) Should any excavation in unforeseen rock outbreaks, adverse ground, buried made surfaces, or for any dewatering be necessary, we will provide evidence of the problem and additional charges will apply.

7) You must provide a full soil report should you believe any of the ground that we or you are to excavate is contaminated.

8) If any new work is being undertaken that you have not detailed within your application (i.e. your proposed site entrance) and may reduce/increase the depth of Electricity North West existing assets, you must provide trial holes for measurements to be taken off the depth of the existing cable(s).

9) If work is required to alter the cover or divert any existing cables, modify or underground existing overhead lines, other than those identified, additional costs will be fully chargeable to you.

Electrical

1) Your Maximum Import Capacity (MIC) is to be based upon your requested maximum demand (in kVA) and you must not increase your maximum demand without obtaining approval from Electricity North West Limited.

2) The supply quality and voltage at the exit point only will be in accordance with the prescribed Licence conditions.

3) Any cable, plant, or equipment connected after the exit point is your responsibility.

4) Our supply arrangements offered to you are PME unless system conditions dictate otherwise. You will be required to bring all your existing wiring up to the PME specification as per the current IEE/IET wiring regulations. (Please be aware that there may be additional charges for providing a non-PME connection and these will be specified in your quotation).

5) Our programme for the commissioning works of the electrical plant and associated infrastructure will be compiled on the assumption that there are no operational restrictions in place on the distribution network during the connection phase of the programme. Operational restrictions may be imposed as a result of electrical faults on the Electricity North West Limited's plant or equipment, mal-operation problems with the equipment, or during periods of high load on the distribution network. Our programme will be based upon the system running normal.

6) Any existing service will be disconnected and removed if a new exit point has been made available. You must inform Electricity North West Limited upon the changeover of your internal wiring to the new service position to allows us to remove your redundant service.

Generation

1) Unless it is included within your application, you must contact Electricity North West Limited if you intend to provide facilities to allow the export of electricity (including by means of CHP, solar cells, wind turbines etc) into the electricity distribution network or operate on site generation that interconnect with our supplies, including as a means of an emergency supply. We reserve the right to amend our price and programme of works in association with these facilities.

Non-Linear Loads (motors, welders and rectifiers)

1) Motors, Welders, and other equipment likely to affect the supplies to other consumers must not be connected without prior approval from Electricity North West Limited.

2) For all non-linear loads, it is your responsibility to ensure that the cumulative effect of any harmonic-generating equipment (e.g. Rectifiers, invertors & variable speed motor drives) complies with Industry Standards. If complaints are received from other customers connected to the Distribution System regarding supply disturbance and these can be directly attributed to your equipment, then Electricity North West Limited reserve the right to insist that you disconnect the offending equipment until remedial action is taken by yourself, at your expense.

Metering

1) For MPAN numbers to be issued, we require the full postal address, including post code for the property to be connected, together with confirmation of the end users nominated electricity provider.

2) You should contact your electricity supplier to request a meter to be installed (as per item (12 consumer), (13 business) of our General Conditions of Contract). You will require your MPAN numbers to arrange an installation date with your supplier, and your internal wiring will need to be ready before the meter may be connected.

Statutory Requirements

1) All quotations are subject to all the necessary consents, easements and wayleaves being obtained at a nominal cost. No commitment to commence or complete the works can be made until such consents; easements and wayleaves have been secured.

2) In the event of the necessary consents, easements and wayleaves not being granted a redesign may be required (if possible), and we reserve the right to amend our price and programme of works to reflect any redesign.

3) All quotations exclude costs associated with third party legal fees and independent land agents fees in acquiring any necessary consents. Electricity North West Limited will need to recover these costs from you where necessary (any legal costs included in the quotation refer only to those incurred by the Electricity North West Limited legal team).

4) You must transfer to Electricity North West Limited, free from chief or ground rent and indemnified against road charges, all lands and associated rights required for the said cable route and/or substation for a single nominal payment of £1.00. Electricity North West Limited ' Estates and Wayleaves Department will deal with this matter. If agreement cannot be reached with regard to this matter for any reason, then it might be necessary to revise the quotation for the provision of these connections.

5) You will provide public footpaths / service strips, and associated rights required for the said cable route (for a single nominal payment of £1.00), to all units / properties.

6) Any client intending to carryout civil works for foundations of substations must provide the dimensions and also its accurate intended position in relation to your building on acceptance of this quotation. No Consents will be applied for until these dimension have been provided and approved by Electricity North West Limited.

7) The quotation does not account for the costs associated with any crop loss or agricultural land damage and any land agents fees in recovering these costs. Electricity North West Limited will need to recover these costs from you where necessary.

8) Where Electricity North West Limited are required to obtain legal consents you must provide with the acceptance of this quotation a copy of the land registry documents out lining the ownership of your land.

9) Electricity North West Limited will not energise any assets installed in connection with this quotation until all necessary consents have been legally completed.

10) Please refer to items 10 (a), (c), (d), (e) in the general conditions of contract (consumer) and (business) regarding statutory requirements.

11) You will be liable for any inaccuracies in the information you provide (including the dimensions of civil works) and you will therefore be liable for all associated costs, including any required demolition and diversion.

12) If your supply requires the siting of a substation whether it be brick built or GRP, you must provide back to Electricity North West Limited triangulated measurements from a fixed point (i.e. existing building) either by hand or a cadded version. This will enable Electricity North West Limited to proceed obtaining the necessary consents.

Customer Supplied and Metered Direct from the LV Cabinet / Board

1) It is Electricity North West Limited policy to design substations to be housed within a standard GRP housing. Should you require a non-standard GRP housing (alternative colour/finish), or you wish to provide a brick/stone built substation, we will provide the required details and we reserve the right to amend our price should this result in any additional costs being incurred by us.

2) For brick/stone built substation we will need to have witnessed that all builders' works items have been completed in

accordance with the drawing provided by us. This includes the installation of the doors (with the appropriate locks); the substation is weather proof, the substation is clean and free from debris, and all small power, heating, lighting, fire compartmentation is complete.

3) Electricity North West Limited require the substation to be accessible 24 hours, 365 days a year. Access to our equipment must be via an Electricity North West Limited suited keyed facility. If you plan to install gates or fencing after our installation then you must inform Electricity North West Limited before you do so.

4) This quote assumes there is a suitable access and "Hard Standing" adjacent to the substation to enable access by Electricity North West Limited to install, maintain and remove the substation equipment using low loader type vehicles. Without this we reserve the right to amend our price to cover any additional cost incurred.

5) As the proposed transformer, associated switchgear and cables will be owned and maintained by Electricity North West Limited, we will be free to use any spare capacity, above the amount reserved by Capacity Charges, to supply other consumers as required.

6) You will be responsible for the design, installation, maintenance and provision of the single; aluminium wired armoured copper cables fed direct from our cabinet to your switchgear. You will also be required to provide the lugs to terminate these cables to our cabinet. We will carryout the termination into our cabinet. (Note) The maximum size of singles cable that our cabinet can accommodate is 630mm sq. Alternative cables of similar specification may be considered, including un-armoured types where installation conditions permit.

7) You will also be responsible for design maintenance and provision of the earth cable(s) from your equipment to our cabinet. At the customer's switchgear, the aluminium wire armour (if provided) of the phase conductors shall be insulated and not bonded or earthed. Any neutral cable armour shall be connected to the customer's earthing terminal at the customer's switchgear.

8) The neutral is solidly earthed at the Electricity North West Limited fuse cabinet. It is not permissible to additionally earth the customer's neutral at his switchgear.

9) You will be required to duct (using Electricity North West Limited approved ducting) all remote metering cables between our switchgear and your metering point. Ideally the maximum distance from your switchgear to our equipment should not exceed 15 metres.

10) In addition to your advance connection charge payment, you shall also be responsible for ongoing Use of System charges in accordance with our published charging statement as amended from time to time. We will recover these from your electricity supplier who shall include them in their charges to you. For information, the current use of system charges that are likely to apply for this connection are given in our Use of System Charging Statement which can be found on our website 'www.enwl.co.uk'.

    Where the charges include a Maximum Capacity component, the capacity can only be reduced after a period of 12 months from the supply availability date. If you do not commence, or cease to take energy through this exit point for any reason during this 12 month period, then the balance of the Capacity Charges shall become payable to us. Please note, the use of the connection is covered by the 'National Terms of Connection' and details can be found at 'www.connectionterms.co.uk'.

11) It is Electricity North West Limited policy to issue relevant drawings only after a quotation has been accepted.

12) You will provide all substation civil works to Electricity North West Limited specification, details of which will be provided on acceptance of this quotation (unless you have requested that we carryout all civil works for this quotation.

CDM Regulations

1) We have not included for performing the duties of Principal Contractor/Designer as laid down in the CDM Regulations for any work carried out on your site, or in the area immediately adjacent to the site.

2) Electricity North West Limited (or their nominated contractors) will provide risk assessments and method statements upon request for our activities on your site.

3) Our quotation excludes the following site facilities, which must be provided by the principle contractor: Temporary water supply, temporary electricity supply & temporary lighting and power, Skips and clearance of rubbish and Scaffolding.

Health and Safety

The following information is given to assist you in maintaining safe working practices on the site:

1) Electricity North West Limited plans carry an endorsement stamp that is there for your safety. Before any machines are used, all of Electricity North West Limited underground assets should be located by manual excavation. All excavation should be done by taking the appropriate safety precautions in the ‘Health and Safety Executive Guidance Note G47’ ‘Avoiding Danger from Underground Services’; taking cognisance of the fact that other plant may be in the vicinity which is not shown on the plans. Please ensure that the current issue of plans is referred to before commencing work on site.

2) If you move plant and equipment near high voltage overhead lines you must ensure the requirements of HSG(6) (Avoidance of Danger from Overhead Power Lines) are complied with. In particular you must seek advice from us before any type of mechanical excavator is used within 9 metres of such lines when measured horizontally at ground level to the nearest conductor attached to wood poles and 15 metres for those supported on metal towers and structures. You must also seek advice before any large items of plant & machinery pass beneath overhead power lines that are not across roadways since vehicular clearance may be reduced.

3) All cables should be treated as live until proven otherwise using approved techniques.

4) If any cable/s are exposed during the course of your site investigation and you require their status proving please contact Electricity North West on 0800 195 4141.

Cabling and Ducting

1) You will be responsible for the installation of all cable entry ducts into buildings.

2) We reserve the right not to commence works until we have received a scaled drawing, clearly defining all the related measurements of the as laid cable duct routes.

3) In order to provide opportunity to inspect any duct installation we require a minimum of one week's notification of your intention to backfill any trenches on site. Alternatively you may be required to provide trial holes along the route (at locations requested by the Electricity North West Limited Representative) in order for an inspection to be carried out.

4) For safety reasons we only lay and energise cables, as they are required, hence we may refuse to install our apparatus along the full length of any joint utility trench you may excavate. It may therefore become necessary for you to re-excavate a trench in order that we may install our apparatus, as in accordance with Electricity North West Limited Engineering Policy document 201.

5) All your ducting requirements and meter boxes must be purchased by you but must be manufactured to Electricity North West Limited Specification. You can purchase them via any local Jewson's Building merchants.

Disconnection

1) We have not included the costs for any existing service disconnection/s in our quotation. For all disconnections please contact Electricity North West Customer Service on 0800 048 1820.

Utility Tracker - Main Warehouse

Utility	Company	Description	Supplied From	Supply Reference	Meter No	Contact Details	MCC Contact Details	Comments
Electricity	ENWL	Main Warehouse Building EXISTING TO BE RETAINED (IN LOCATION ONLY - NOT TO SUPPLY DEPOT BUILDING OR SITE)	On site 800KVA Substation Ref. MCCD Gorton Lane 172094	MPAN No 1600000100043		Michelle Range Direct Dial: 08433 114 378 Mobile: +44(0)7825 080044	MCC Contact Chris McNeill Tel: 0161 600 8462 Mobile: 07976 228 779 c.mcneil@manchester.gov.uk	Incoming supply enters the warehouse at the bottom end of the warehouse building from adjoining 800KVA substation. MCC Current ASC 330KVA. Substation also supplies adjacent buildings off Preston Street.
Gas	Gazprom:	Workshed (Located far right of workshop in marked up cupboard (old plate shed / garage) EXISTING TO BE RETAINED / REVIEWED	LP 2" SP Main Off Preston Street	MPRN 78434701	MSN M0310D644009B7 Meters (and AMR) owned by Energy Assets	TBA	MCC Contact Mick Mckenzie Tel. 0161 234 3660 m.mckenzie@manchester.gov.uk	Incoming supply rises externally circa 4m from Preston Street to enter the building within the Plating Shed from adjacent main within Preston Street which runs parallel to warehouse buidling.
		Main Warehouse Building (Street scene van park gas shed; inside meter) EXISTING TO BE RETAINED / RE-ROUTED TO ALLOW DEMOLITION	Size TBC (unable to gain access) Off Gorton Lane	MPRN 78436705	MSN M040K0107008 Meters (and AMR) owned by Energy Assets			Incoming supply enters the site adjacent to the street scene van park area, routes below ground across the car park and rises up externally to enter the existing warehouse. Existing supply pipework to be re-routed to allow existing buildings to be demolished.
Water	United Utilities	Main Warehouse Building (Serves - main site buildings, washdowns, fire hydrants etc.) EXISTING TO BE RETAINED / RE-ROUTED TO ALLOW DEMOLITION	125mm supply Off Gorton Lane	Account number 4083682315 Water SPID 3002532363W15 Sewerage SPID 3002532363S12	MSN - 5561	TBA	MCC Contact Lindsay Oldham Telephone - 0161 245 7899 l.oldham@manchester.gov.uk	Incoming supply enters the site adjacent to the street scene van park area, routes below ground across the car park and rises up internally within the existing warehouse. The existing supply also serves a series of fire hydrants & hose reels externally and internally. Existing supply pipework to be re-routed to allow existing buildings to be demolished.
Telecoms	BT	Main Warehouse Building / Office Extention EXISTING TO BE RETAINED / REVIEWED	Local street network off Gorton Lane	TBA	N/A	TBA	TBA	1No Incoming supply enters the warehouse at the bottom end of the warehouse VIA adjoining 800KVA substation area. Second supply enters bottom right side of the warehose to the front office extention building.
Cable	Sky / Vodafone	Site Perimeter EXISTING TO BE RETAINED	N/A	N/A	N/A	TBA	N/A	Infrastructure along Gorton Lane and Preston Street but does not appear to be within site works area.
Street Lighting	Maintained by Amey Street Lighting	Street Lighting EXISTING TO BE RETAINED	Local feeder Pillar / Network	N/A	N/A	Karen Whittaker Manchester Street Lighting | Highways Amey t: 0161 277 6777 Karen.Whittaker@amey.co.uk	N/A	
Highways	MCC	Preston Street Culvert BY OTHERS	N/A	N/A	N/A	Victor K. NWEGBU (Ph.D.) Highways and Transport Engineer Telephone: 0161 219 6668 Mobile : 07742 227 406	N/A	

Utility Tracker - Coca Cola Building

Utility	Company	Description	Supplied From	Supply Reference	Meter No	Utility Contact Details	MCC Contact Details	Comments
Electricity	ENWL	Coca Cola Building TO BE DISCONNECTED	Substation Ref 171674 Froxmer Street (Follow & Bate)	MPAN No 1600000140046	TBA	Michelle Range Direct Dial: 08433 114 378 Mobile: +44(0)7825 080044	MCC Contact Chris McNeill Tel: 0161 600 8462 Mobile: 07976 228 779 c.mcneil@manchester.gov.uk	Incoming supply enters the Coca Cola Building at the bottom right hand side of the building off Hammerstone Road.
Gas	Gasprom (Cadent Gas Ltd)	Coca Cola Building TO BE DISCONNECTED	LP 63PE Main Off Hammerstone Road	MPRN 78438305	MSN M065K0130909D6 All meters (and AMR) owned by Energy Assets	TBA	MCC Contact Mick McKenzie Tel. 0161 234 3660 m.mckenzie@manchester.gov.uk	Incoming supply enters the Coca Cola Building at the top right hand side of the building off Hammerstone Road.
Water	United Utilities	Coca Cola Building TO BE DISCONNECTED FROM COCA COLA BUILDING BUT INCOMING SUPPLY TO BE RETAINED & RE-USED	42mm supply Off Hammerstone Road	Account number 4083682315 Water SPID 3002532363W15 Sewerage SPID 3002532363S12	MSN C13EB000956	TBA	MCC Contact Lindsay Oldham Telephone - 0161 245 7899 l.oldham@manchester.gov.uk	Incoming supply enters the site adjacent to the memorial garden area, routes below ground to serve the Coca Cola building
Telecoms	BT	Coca Cola Building TO BE DISCONNECTED	Local street network off Hammerstone Road	TBA	N/A	TBA	N/A	Incoming supply enters the Coca Cola Building at the bottom right hand side of the building off Hammerstone Road
Cable	Sky / Vodafone	Site Perimeter TO BE DISCONNECTED	N/A	N/A	N/A	TBA	N/A	Infrastructure along Gorton Lane and Preston Street but does not appear to be within site works area.
Street Lighting	Maintained by Amey Street Lighting	Street Lighting TO BE REVIEWED	Local feeder Pillar / Network	N/A	N/A	Karen Whittaker Manchester Street Lighting Highways Amey : 0161 277 6777 Karen.Whittaker@amey.co.uk	N/A	

Utility Tracker - New Site Supplies

Utility	Company	Description	Supplied From	Supply Reference	Meter No	Contact Details	MCC Contact Details	Comments
Electricity	ENWL / Ameon	Main Depot Building (MCC/Biffa/etc), Gatehouse and South Car Park area via feeder pillars	Substation Ref. No2	Current Building MPAN No 1600000100043 MCCD Gorton Lane 172094		Non-Contestible - Michelle Range Office: 08433 114 378 Mobile: +44(0)7825 080044 Contenstible - Jamie Barlow Officel: 01253 760160 Mobile: +44(0)7595 412003	MCC Contact Chris McNeill Tel: 0161 600 8462 Mobile: 07976 228 779 c.mcneil@manchester.gov.uk	Existing Substation / Transformer installation capacilty has already be allocated to other developments in the area. New 1000KVA substation via ENWL / Ameon will be provided adjacent existing substation
Electricity	ENWL	External Area Supplies for Car Park Lighting, Gritter Garage, Fuel and Washdown area via feeder Pillars	Substation Ref. No1			Michelle Range Direct Dial: 08433 114 378 Mobile: +44(0)7825 080044	MCC Contact Chris McNeill Tel: 0161 600 8462 Mobile: 07976 228 779 c.mcneil@manchester.gov.uk	Existing Substation / Transformer installed for the supply of the Bin Wagon EVC installation. This substation will be the source of supply for the North Car Park, Gritter Gargae and washdown facility areas via local feeder pillar installation.
Gas	Gazprom:	Workshed (Located far right of workshop in marked up cupboard (old plate shed / garage) EXISTING TO BE RETAINED / REVIEWED	LP 2" SP Main Off Preston Street	MPRN 78434701	MSN M0310D644009B7 Meters (and AMR) owned by Energy Assets	TBA	MCC Contact Mick Mckenzie Tel. 0161 234 3660 m.mckenzie@manchester.gov.uk	Incoming supply rises externally circa 4m from Preston Street to enter the building within the Plating Shed from adjacent main within Preston Street which runs parallel to warehouse buidling.
		Main Warehouse Building (Street scene van park gas shed; inside meter) EXISTING TO BE RETAINED / RE-ROUTED TO ALLOW DEMOLITION	Size TBC (unable to gain access) Off Gorton Lane	MPRN 78436705	MSN M040K0107008 Meters (and AMR) owned by Energy Assets			Incoming supply enters the site adjacent to the street scene van park area, routes below ground across the car park and rises up externally to enter the existing warehouse. Existing supply pipework to be re-routed to allow existing buildings to be demolished.
Water	United Utilities	Main Warehouse Building (Serves - main site buildings, washdowns, fire hydrants etc.) EXISTING TO BE RETAINED / RE-ROUTED TO ALLOW DEMOLITION	125mm supply Off Gorton Lane	Account number 4083682315 Water SPID 3002532363W15 Sewerage SPID 3002532363S12	MSN - 5561	TBA	MCC Contact Lindsay Oldham Telephone - 0161 245 7899 l.oldham@manchester.gov.uk	Incoming supply enters the site adjacent to the street scene van park area, routes below ground across the car park and rises up internally within the existing warehouse. The existing supply also serves a series of fire hydrants & hose reels externally and internally. Existing supply pipework to be re-routed to allow existing buildings to be demolished.
		Coca Cola Building TO BE DISCONNECTED FROM COCA COLA BUILDING BUT INCOMING SUPPLY TO BE RETAINED & RE-USED	42mm supply Off Hammerstone Road	Account number 4083682315 Water SPID 3002532363W15 Sewerage SPID 3002532363S12	MSN C13EB000956	TBA	MCC Contact Lindsay Oldham Telephone - 0161 245 7899 l.oldham@manchester.gov.uk	Incoming supply enters the site adjacent to the memorial garden area, pipework to be re-routed to serve Gatehouse, Gritter Garage and Vehicle wash facilities
Telecoms	BT	Main MCC Building	Local street network off Gorton Lane	TBA	N/A	TBA	TBA	Further discussions with MCC ICT Team required to confirm if the current connections need to be upgraded. Current intention is to retain current incoming telecoms provision.
Street Lighting	Maintained by Amey Street Lighting	Street Lighting	Local feeder Pillar / Network	N/A	N/A	Karen Whittaker Manchester Street Lighting | Highways Amey t: 0161 277 6777 Karen.Whittaker@amey.co.uk	N/A	To be reviewed at Stage 4 in line with enabling works and permenant solutions.

Volume 8 – Supplementary Information

1. Health & Safety - Hazard Risk Register
2. EVC Bin Wagon Design Drawings

Health & Safety – Hazard Risk Register

Health Safety - Hazard Risk Register

Project Health & Safety - Hazard & Risk Register

Project Name:	Hammerstone Road, Manchester

Prepared By:		
	Colin Burns	04/01/2021
	David Green	04/01/2021

Issue Date:	04/01/2021
Revision:	Rev 1
Date of Last Review:	04/01/2021

Risk Status Key:		Description:
Mitigate	-	Design Not Complete
Accept	-	Design Complete, Remaining risk at acceptable level
CDP	-	Contractor Design Input required
Construction	-	Transfer to Contractor as Construction Risk
Residual	-	Risk Remains on Completion of Build for H&S File

No.	Raised By:	Date Raised	Significant Hazards	Risk H	Risk M	Risk L	Any Mitigation Measure Taken:	PD and Design Team Comments	Action Owner	Date of Last Revision	Status
Health and Safety Hazards & Risks											
1	CB/DG	20.12.20	On site excavations and potential danger of striking of existing Services in area of proposed works.		M		Hazard elimination not possible as dictated by existing services locations and proposed site location. Risk mitigated by carrying out utility company searches and producing drawings identifying services, hazard and trial pit locations.	Existing survey information to be provided by the client. Investigation to be carried out prior to works commencing and provided to the Principal Contractor for review as soon as available. Contractor to have watching brief for any ground excavations and follow guidance given in HSG47.	Morgan Sindall / HA / MCC		Construction
2	CB/DG	20.12.20	Existing services not yet identified over and above those already indicated on plans and not in locations envisaged		M		None possible due to unforeseen nature of the risk.	Contractor to have watching brief for any ground excavations and follow guidance given in HSG47.	Morgan Sindall / HA / MCC		Construction
3	CB/DG	20.12.20	Potential loss of incoming electrical supply to the site and loss of all operational capacity.			L	No generator included and currently not considered a critical operational requirement or life safety issue.	Agree operational procedures with the clients management / maintenance team in the event of Depot main incoming electrical supply being lost.	Morgan Sindall / HA / MCC		Residual
4	CB/DG	20.12.20	Live equipment, personal injury or death due to electric shock during strip out works		M		Enabling works package to be undertaken to identify where existing services are live or dead and isolate / strip out accordingly Investigation to be carried out prior to works commencing and provided to the Principal Contractor for review as soon as available.	Risk to be managed on site by Principal Contractor	Morgan Sindall		CDP
5	CB/DG	20.12.20	Potential loss of internal supply to the individual tenants occupying the building and loss of all operational capacity.			L	Sub-distribution system will be implemented for the building with each individual tenant operation having its own sub-distribution panel / distribution Boards	Stage 3/4 design to be developed in line with client brief and operational information identified by client design team	Morgan Sindall		Mitigate
6	CB/DG	20.12.20	Live equipment, personal injury or death due to electric shock during new installation works		M		Design, Install and test installation to BS 7671. Contractor to provide method statements for all activities and operate a permit to work system. All switch rooms and risers to be capable of being locked.	Residual Risk to be managed on site by Principal Contractor	Morgan Sindall		Construction
7	CB/DG	20.12.20	Build up of fumes from vehicles within workshop area			L	Design to consider ventilation / extract system	Residual Risk to be managed on site by Principal Contractor	Morgan Sindall / HA		Mitigate
8	CB/DG	20.12.20	Ingress of vermin			L	Bunds inserted within all ducts entering / exiting the building	Contractor to have watching brief for any ground excavations and incoming services works.	Morgan Sindall		Construction
9	CB/DG	20.12.20	Installation of fire detection at high level			L	Design to incorporate Aspiration FA System where possible to remove frequent access requirements.	Residual Risk to be managed on site by Principal Contractor	Morgan Sindall / HA		Mitigate

Health Safety - Hazard Risk Register

No.	Raised By:	Date Raised	Significant Hazards	Risk H	Risk M	Risk L	Any Mitigation Measure Taken:	PD and Design Team Comments	Action Owner	Date of Last Revision	Status
10	CB/DG	20.12.20	Falls from height / dropping of tools or materials on personnel below.			L	All scaffolds, platforms, cherry pickers etc. to be suitable for purpose and erected by trained personnel	Residual Risk to be managed on site by Principal Contractor	Morgan Sindall		Construction
11	CB/DG	20.12.20	Piped services welding, soldering and flame cutting causing: Fire, eye injury, burns, fumes.			L	Hot works permit system to be operated by contractor covering all relevant H&S issues including use of supplementary ventilation.	Residual Risk to be managed on site by Principal Contractor	Morgan Sindall		Construction
12	CB/DG	20.12.20	Installation of roof mounted PV equipment / any other plant items			L	Adjacent Car Park to be utilised for landing and lifting equipment onto roof and down from the roof	Residual Risk to be managed on site by Principal Contractor	Morgan Sindall		Construction
13	CB/DG	20.12.20	Hot and cold water services sterilisation			L	Contractor to provide method statement and COSHH assessment of chemicals to be used. Warning notices to be posted for duration of work. Test for residual required on completion, contractor to provide chlorination certificate	Residual Risk to be managed on site by Principal Contractor	Morgan Sindall		Construction
14	CB/DG	20.12.20	Installation of large items of plant and equipment			L	Provide suitable lifting and moving equipment and manpower for activity. Provide method statement	Residual Risk to be managed on site by Principal Contractor	Morgan Sindall		Construction
15											
16											
17											
18											
19											
20											
21											
22											
23											
24											

Health Safety - Hazard Risk Register

No.	Raised By:	Date Raised	Significant Hazards	Risk H	Risk M	Risk L	Any Mitigation Measure Taken:	PD and Design Team Comments	Action Owner	Date of Last Revision	Status

Low priority (L) - indicates that the risk is manageable and is probably controlled by existing procedures;

Medium priority (M) - indicates that considerable thought must be given to appropriate control measures;

High priority (H) - indicates that the task is safety critical and appropriate controls, which may include the provision of a detailed method statement or application of a permit to work procedure, must be instituted

EVC Bin Wagon Design Drawings

DO NOT SCALE

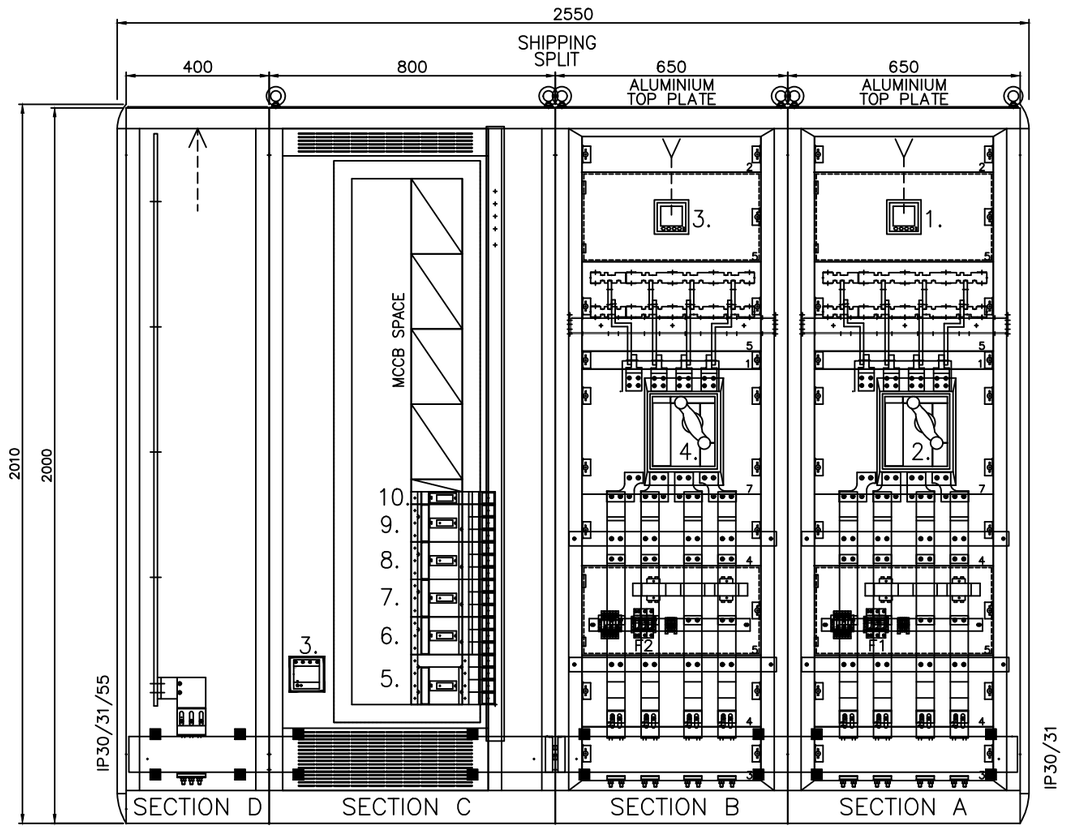

FRONT VIEW
(DOORS REMOVED)

5mm ALUMINIUM INCOMING TOP GLANDPLATE.
3mm STEEL OUTGOING TOP GLANDPLATE.

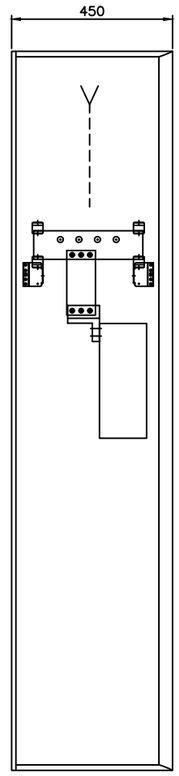

SIDE VIEW

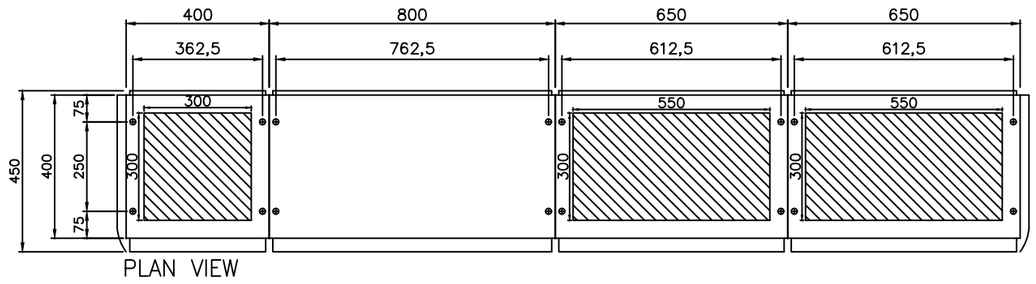

PLAN VIEW

ALLOW 1200mm MIN AT FRONT FOR ACCESS & 100mm AT REAR FOR VENTILATION

NOTES:
PANEL TO BE SHIPPED IN 2 SECTIONS.
PLAIN LOCKABLE OVERALL DOORS FITTED.
STANDARD LABELS AS PER 3DS 42850.
PANEL EXTENDABLE ON BOTH SIDES.
TEST POINTS ON INC. DEVICES AS STANDARD.

ENCLOSURE	– PRISMA 'PLUS' IP31 BSEN 60529 – FORM 3 TYPE 2 BSEN 61439–2
PAINT FINISH	– WHITE, RAL 9001
LABELS	– W.B. GRAVOPLY & STANDARD LEGENDS
CABLE ACCESS	– INCOMING TOP – OUTGOING TOP
SUPPLY	– 400V 3PH 4W 50HZ
PROSPECTIVE SHORT CIRCUIT CURRENT Icp	– 50kA
MAIN BUSBARS	– 100x10 HDHC 3PH&N (2150A RATED)
RISER BUSBARS	– MEGAPACT STACK (1600A RATED)
FAULT LEVEL	– 50kA 1SEC
EARTH BAR	– 60x5 HDHC CU AT TOP

CABLE SIZES (INTERNAL)
MCB 1–16A : IN. 6mm2 OUT. 2.5mm2
20–25A : IN. 6mm2 OUT. 4mm2
32A : IN. 6mm2 OUT. 6mm2
MCCB <40A – 10mm2 PVC 200A – 15.5x4 FL Cu
63A – 16mm2 PVC 250A – 15.5X4 FL Cu
100A – 35mm2 PVC 400A – 24x5 FL Cu
125A – 50mm2 PVC 630A – 32x6 FL Cu
160A – 70mm2 PVC CONTROL CABLE – 1mm2

Total Weight approx 800KG.

TORQUE SETTINGS	
NSX100	10Nm
NSX250/160	15Nm
NSX630/400	50Nm

A	30/09/20	REDRAWN OPPOSITE HAND	Schneider Electric Tel: 0870 608 8608	CUSTOMER Calverley Deakin	TITLE GENERAL ARRANGEMENT OF MAIN LV SWITCHBOARD		MG REF. 5558402
				ORDER No. 492–096261 D			PROD. No. 103730355
				PROJECT Hammerstone Depot	SCALE NTS	DRAWN D.M. DATE 28/09/20	DWG. No. 3DE 55470
				COPYRIGHT: NOT TO BE REPRODUCED WITHOUT AUTHORISATION FROM SCHNEIDER ELECTRIC	DIMENSIONS MM	CHECKED S.D. DATE 30/09/20	SHEET No. 1 OF 3

REF.	EQUIPMENT DESCRIPTION	LABEL INSCRIPTION	CUSTOMER CABLE	REF.
1	POWERLOGIC PM5111 POWER METER (V, A, F, PF, KW, KVAR, KVA, KWh, KVARh, KVAh, DEMANDS, HARMONICS, OUTPUT)	INCOMING MAINS SUPPLY METER		
2	NS1600N 50KA MICROLOGIC 5.0 1600A 4P MANUAL OPERATED FIXED MCCB + RONIS KEY INTERLOCKED DIRECT ROTARY HANDLE	INCOMING MAINS SUPPLY	8x1c 630mm2	
3	POWERLOGIC PM5111 POWER METER (V, A, F, PF, KW, KVAR, KVA, KWh, KVARh, KVAh, DEMANDS, HARMONICS, OUTPUT)	INCOMING GENERATOR SUPPLY METER		
4	NS1600N 50KA MICROLOGIC 5.0 1600A 4P MANUAL OPERATED FIXED MCCB + RONIS KEY INTERLOCKED DIRECT ROTARY HANDLE	INCOMING GENERATOR SUPPLY		
5	NSX100N 50KA TM80D 80A 4P MCCB FEEDING SCHNEIDER A9L16634 iPRF1 12.5r TYPE 1&2 SURGE SUPPRESSION UNIT	SURGE PROTECTION UNIT		
6	NSX160N 50KA TM160D 160A TP MCCB + N	DB1 SUPPLY	4c 70mm2	
7	NSX160N 50KA TM160D 160A TP MCCB + N	DB2 SUPPLY	4c 70mm2	
8	NSX160N 50KA TM160D 160A TP MCCB + N	DB3 SUPPLY	4c 70mm2	
9	NSX160N 50KA TM160D 160A TP MCCB + N	DB4 SUPPLY	4c 70mm2	
10	NS100N 25KA TM63D 63A SP MCCB + N (L3 PHASE)	DB5 SUPPLY	3c 16mm2	

A	30/09/20	REDRAWN OPPOSITE HAND	Schneider Electric Tel: 0870 608 8608	CUSTOMER Calverley Deakin	TITLE REFERENCE TABLE FOR MAIN LV SWITCHBOARD		MG REF. 5558402
				ORDER No. 492–096261 D			PROD. No. 103730355
				PROJECT Hammerstone Depot	SCALE NTS	DRAWN D.M. DATE 28/09/20	DWG. No. 3DE 55470
				COPYRIGHT: NOT TO BE REPRODUCED WITHOUT AUTHORISATION FROM SCHNEIDER ELECTRIC	DIMENSIONS MM	CHECKED S.D. DATE 30/09/20	SHEET No. 2 OF 3

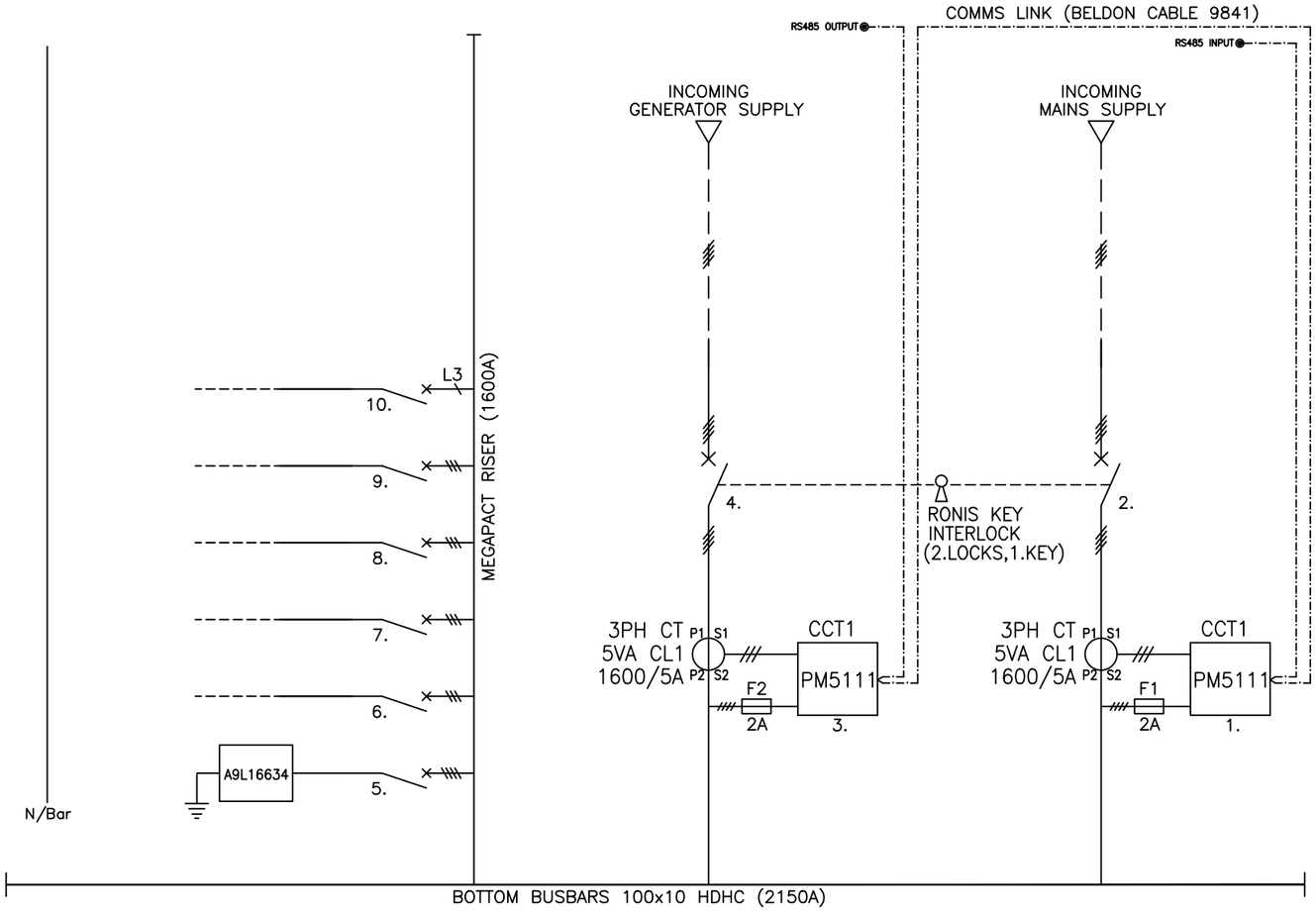

CCT1 3PH INCOMING PM5111 METER CIRCUIT

(*WIRE NUMBERS PREFIXED WITH MCCB REF. No.)

(# WIRE NUMBERS PREFIXED WITH FUSE REF. No.)

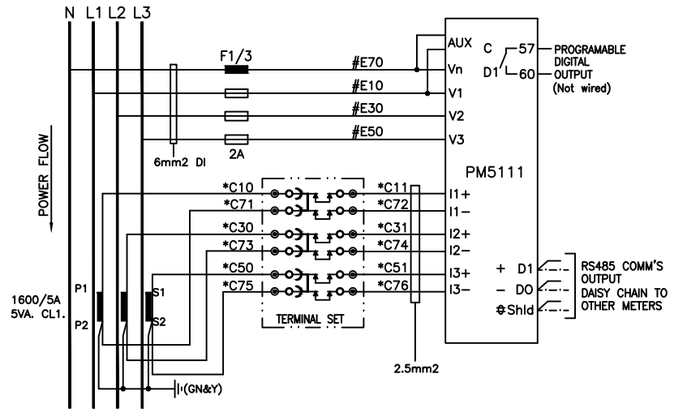

STANDARD CABLE SIZES (UNLESS STATED OTHERWISE)
PVC TRI-RATED BLACK CABLE TO BS6231.
A.C. CONTROL - 1mm2 BLACK (10A circuit-1.5mm2)
D.C. CONTROL - 1mm2 GREY (SEGREGATE FROM AC)
SURGE UNIT - 35mm2
BUSBARS TO FUSES - 6mm2 DOUBLE INSULATED

A	30/09/20	REDRAWN OPPOSITE HAND	Schneider Electric Tel: 0870 608 8608	CUSTOMER Calverley Deakin	TITLE SINGLE LINE DIAGRAM OF MAIN LV SWITCHBOARD		MG REF. 5558402
				ORDER No. 492-096261 D			PROD. No. 103730355
				PROJECT Hammerstone Depot	SCALE NTS	DRAWN D.M. DATE 28/09/20	DWG. No. 3DE 55470
			COPYRIGHT: NOT TO BE REPRODUCED WITHOUT AUTHORISATION FROM SCHNEIDER ELECTRIC		DIMENSIONS MM	CHECKED S.D. DATE 30/09/20	SHEET No. 3 OF 3

Note

Ducts passing from switch room to substation to pass below substation base into substation trough cut level with edge of trough.

Substation base to be 450mm thick, therefore ducts to be 450mm deep to top of duct.

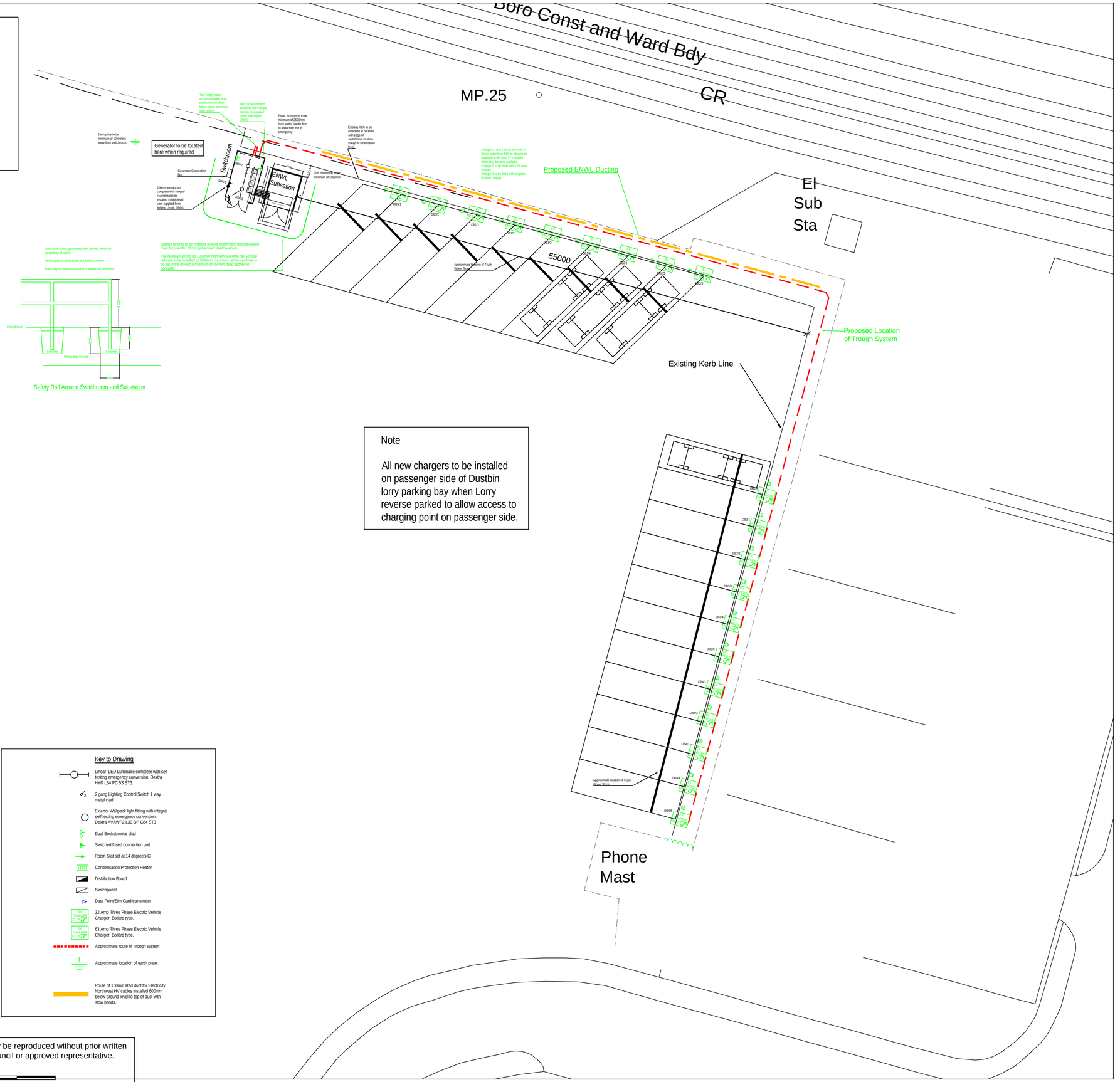

Note

All new chargers to be installed on passenger side of Dustbin lorry parking bay when Lorry reverse parked to allow access to charging point on passenger side.

Key to Drawing

- Linear LED Luminaire complete with self testing emergency conversion. Dextra HYD L54 PC SS ST3.
- 2 gang Lighting Control Switch 1 way metal clad
- Exterior Wallpack light fitting with integral self testing emergency conversion, Dextra AVAWP2 L30 OP C84 ST3
- Dual Socket metal clad
- Switched fused connection unit
- Room Stat set at 14 degree's C
- HTR — Condensation Protection Heater
- Distribution Board
- Switchpanel
- Data Point/Sim Card transmitter
- EV CHARGER 32 TP+ — 32 Amp Three Phase Electric Vehicle Charger, Bollard type.
- EV CHARGER 63 TP+ — 63 Amp Three Phase Electric Vehicle Charger, Bollard type.
- Approximate route of trough system
- Approximate location of earth plate.
- Route of 160mm Red duct for Electricity Northwest HV cables installed 600mm below ground level to top of duct with slow bends.

No part of this drawing or data file may be reproduced without prior written permission of the Manchester City Council or approved representative.

1:200

0 4m 8m 12m 16m 20m

Rev	Note	By	Date
M	Ad spare troughs leaving switchroom and show installed location of earth plate.	CMN	14-12-20
L	Relocate chargers backing onto railway to 4000mm apart to allow for angled parking bays.	CMN	19-11-20
K	Parking bays backing onto railway shown at angle as agreed with Biffa on site on 18-11-20.	CMN	19-11-20
J	Show ducts linking substation to switchroom and show updated layout of switchgear	CMN	5-11-20
H	Rotate substation and move forward to allow kerb line at rear of substation to be extended. Move chargers so as to be on Passenger side of Dustbin Waggons.	CMN	22-10-20
G	Minor alterations to locations to meet Development Contractors requirements. Take load monitoring supply off drawing. Make Construction Issue.	CMN	22-10-20
F	Add dimensions for setting out substation and switchroom to drawing and relocate parking bays to be in front of kerb line. import kerb locations from Topographical Survey	CMN	21-10-20
E	Increase cabling to chargers 2 and 3 to allow 63 Amp chargers to be installed, change circuit references Change wall heaters to tubular heaters. Add humidi stat controlled fan to switchroom. Relocate substation, switchroom and charger points to meet revised layout requested by Development designer.	CMN	19-10-20
D	Add safety rail around switchroom and substation.	CMN	8-10-20
C	Import ENWL Switchroom onto drawing and relocate from kerb line to allow safe access. Show ENWL duct route to site boundary. Change 2 chargers from 32 Amp to 63 Amp. Relocate earth plate to be 10 meters away from switchgear.	CMN	7-10-20
B	Show latest switchgear room dimensions on drawing. Change underground ducts to concrete trough system	CMN	10-9-20
A	Relocate substation and switchgear room to accommodate future refurbishment works. Relocate charging points to accommodate relocated switchroom and substation.	CMN	9-7-20

MANCHESTER CITY COUNCIL

Capital Programmes Division

Manchester City Council
PO Box 532, Town Hall
Manchester
M60 2LA

DRAWING STATUS: Construction Issue

PROPERTY TITLE
Hammerstone Road Depot
Hammerstone Road, Gorton
Manchester M18 8EQ

UPRN: 000077175054
DFE NO.: N/A

PROJECT TITLE
Power Supplies for Vehicle Chargers

DRAWING TITLE
Electrical Installation

JOB NO.: OT-44913
DATE: 5-20
REV: M

SCALE: NTS@A1
AUTHOR: CMN
CHECKED BY: CMN
APPROVED BY: TJ

DRAWING NO.
MCC-ZZ-GF-DR-E-0010-S4

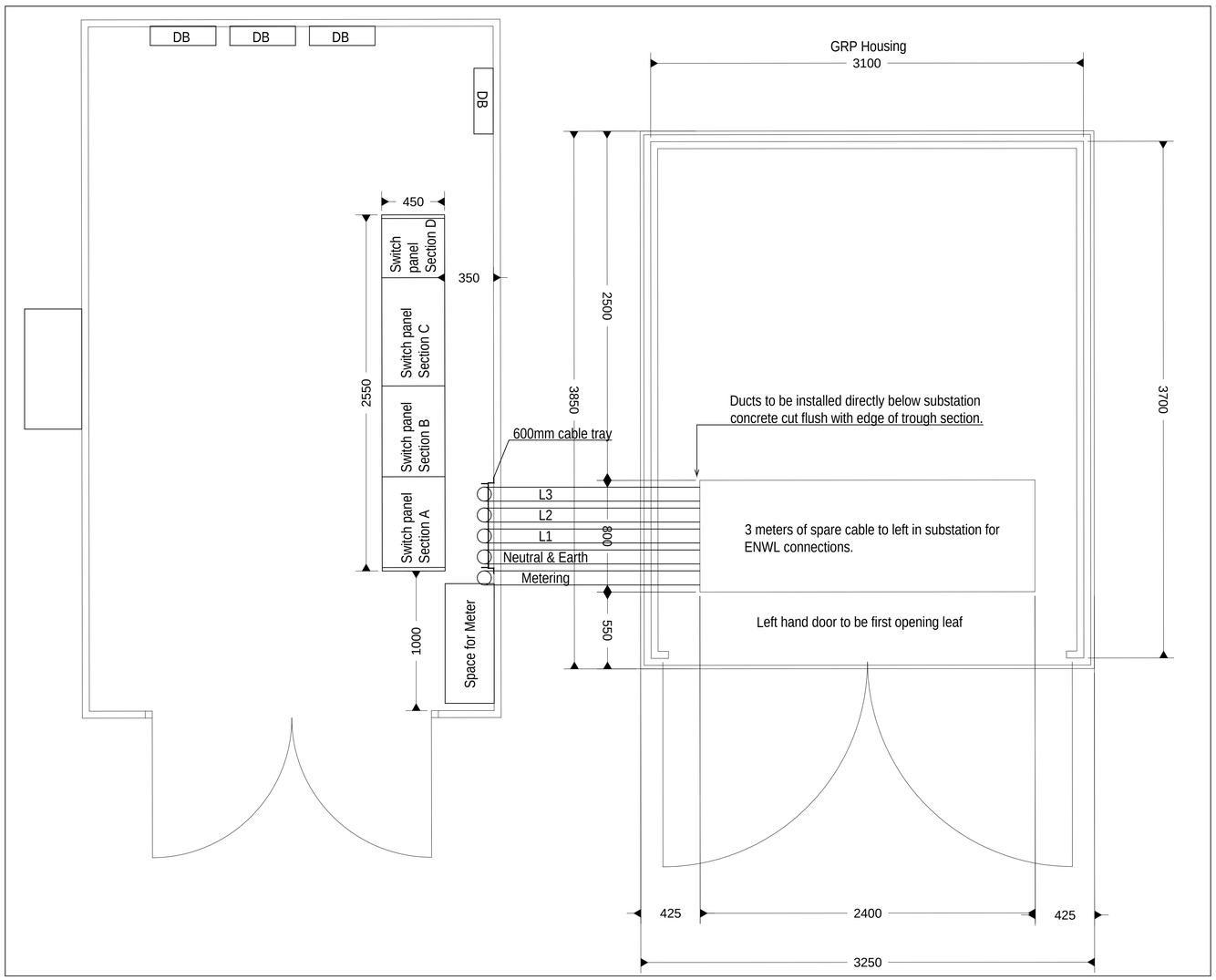

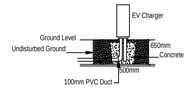

Ground Mounted Carging Point

Note

The contractor is to check ground conditions prior to installing charging points, if ground is found to be not suitable for standard routing the C.A. is to be contacted immediately to agree a suitable method of routing.

A concrete base is to be installed to which the charging station is to be fixed in accordance with the manufacturers instructions, this drawing is indicative and the contractor is to check the fixing details of the chargers to be used and install the base and fixings as recommended by the charging station manufacturer.

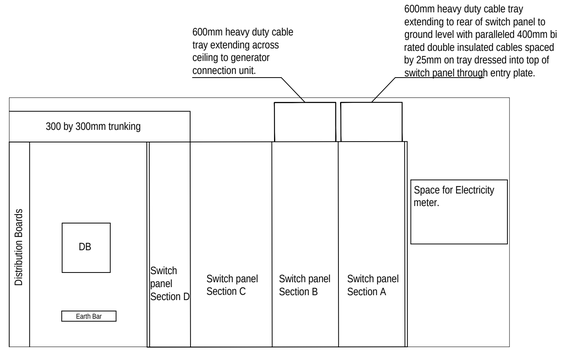

Side Wall

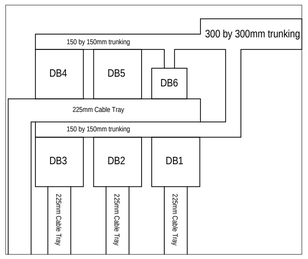

End Wall

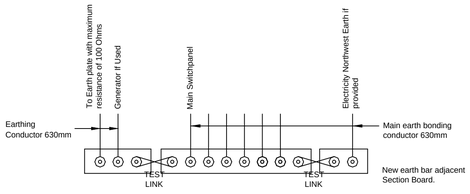

Earthing Arrangements

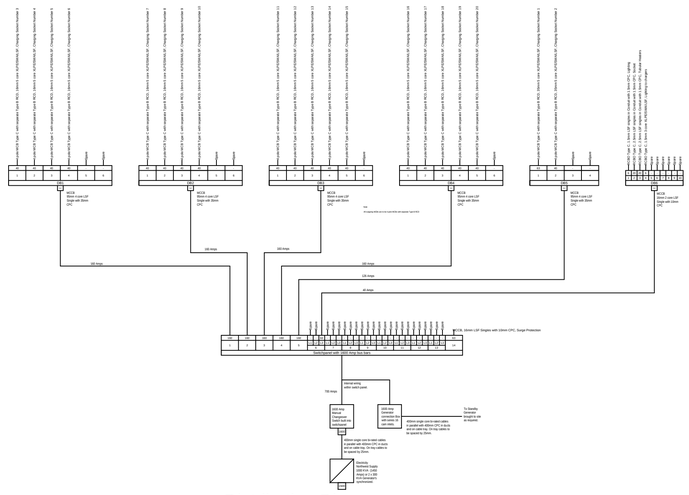

Distribution Diagram

Rev	Note	By	Date
D	Updated to show 16mm cables to 22 Kw chargers and minor switchgear layout changes.	CMN	14-12-20
C	Show revised switchgear to accommodate new switch panel cable entries and 400mm connections to sub station.	CMN	5-11-20
B	Take load monitoring circuit off. Change 32 Amp charger MCBs to 40 Amp. Take Data wiring diagram off drawing. Add DB5 for 63 Amp chargers. Change sub mains from 70mm SWA to 95mm LSF singles in trunking. Increase cable size to circuits DB5-1 and 2 from 16 to 35mm. Make drawing construction issue.	CMN	22-10-20
A	Add Distribution Board to supply 63 Amp chargers and associated tails and containment. Increase cables to chargers 2 and 3 from 10mm to 16mm. Take duct detail off drawing and update charger station mountings.	CMN	7-10-20

MANCHESTER CITY COUNCIL

Capital Programmes Division

Manchester City Council
PO Box 532, Town Hall
Manchester
M60 2LA

DRAWING STATUS: Construction Issue

PROPERTY TITLE
Hammerstone Road Depot
Hammerstone Road, Gorton
Manchester M18 8EQ

UPRN: 000077175054
DFE NO.: N/A

PROJECT TITLE
Power Supplies for Vehicle Chargers

DRAWING TITLE
Distribution Diagram

JOB NO.: OT-44913
DATE: 5-20
REV: D

SCALE: NTS@A1
AUTHOR: CMN
CHECKED BY: CMN
APPROVED BY: TJ

DRAWING NO.
MCC-ZZ-GF-DR-E-0011-S4

No part of this drawing or data file may be reproduced without prior written permission of the Manchester City Council or approved representative.

1:200
0 4m 8m 12m 16m 20m

Hannan Associates

MEP Design Solutions

Mechanical | Electrical | Public Health

Hannan Associates, Beta House, Alphagate Drive
Manchester Road, Denton, Manchester, M34 3SH

Tel: (0)161 337 2200 :: Web: www.hannan-uk.com :: Twitter: @hannanassociate