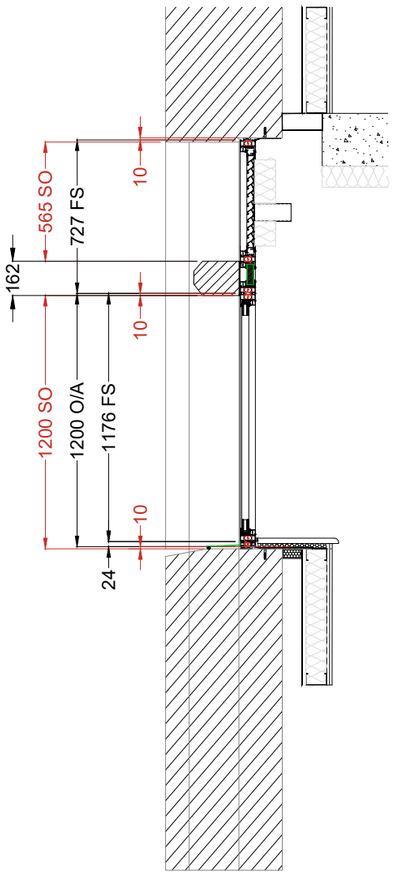

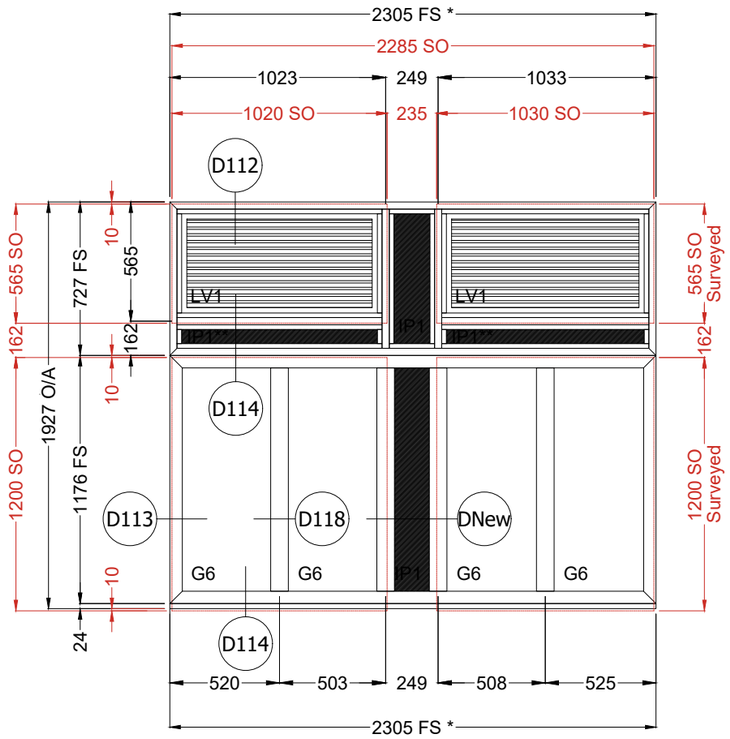

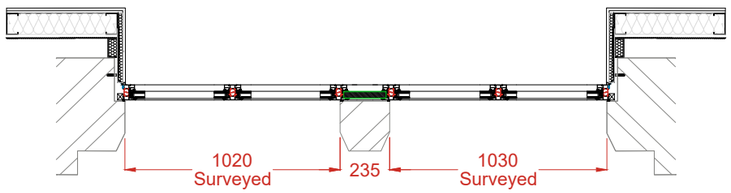

System: Kawneer AA720 Window System	
Type	W20 + W21 + W31 + W32
Location	Atkinson Ele. 1st Floor Level
QTY	1no.
Hardware	None
Glazed	Lower Frame - Internally Uper Frame - Externally
Opens	Fixed
Cill	None
Colour	RAL 7022 Matt (Interpon D SL822G)
Notes	* = Frame 20mm Wider than SO to Fit in Check Reveal Sizes from Site Survey ** = Upper Insulated Panels to be Fitted in Factory

RECEIVED

22-FEB-2021
Gilbert-Ash
BOUCHER ROAD

This drawing (or any part thereof) may not be copied, transmitted or disclosed to any third party or unauthorized person without the prior written permission of Britplas.
Patent Publication No. 2446730A.
This drawing is to be read in conjunction with all other relevant drawings prepared by consultants and sub-contractors.
Do not scale from this drawing. Work only to printed dimensions.
Report any discrepancies to the Architect or representatives thereof.

Notes:
Suitable Primary/ Secondary Steelwork not by Britplas. Steelwork/ Concrete structure tolerance +/-18mm in any direction Non-accumulative.

Glazing :

G6 - 39.5mm DGU
10mm HST Cool-ite Extreme 70-33 II Tgh'd - Outer
16mm Argon Cavity with Black Spacer Bar - Cavity
13.5mm Clear Acoustic Laminate - Inner
U = 1.0, LT = 67%, G = 0.32, Rw(C, Ctr) = 45(-2, -5) dB

SP1 - 32mm Ceramic Insulated Panel
6mm Clear HST Tgh'd - Outer
20mm Argon Cavity with Black Spacer Bar - Cavity
6mm Ceramic Painted Glass HST (RAL 7022) - Inner
+ 100mm Thk Class A1 Foil Backed Insulation

IP1 - Insulated Aluminium Panel
Painted to Match Frame

LV1 - PPC Aluminium Louvre
Painted to Match Frame

POINTING
Mastic colour **RAL 7022** (or nearest equivalent), to be applied as shown by Britplas

EPDM
EPDM by Britplas to Non Fire Rated Frames

Rev.	Description.	Date	Initials
C1	Updated to Survey Sizes. W20, W21, W31 & W32 Frames Combined Construction Issue	19/02/21	DG
A1	Approval Issue	22/06/20	SD

Project Title

Moxy Hotel

Drawing Title

Window Schedule 13

FOR CONSTRUCTION

britplas
Unit 18 Kingsland Grange,
Woolston, Warrington,
Cheshire, WA1 4RW.

Tel - (+44) 01925 824317
Fax - (+44) 01925 284110

Britplas Commercial Ltd

Project No.	Scale	DWG Sheet Size
6602	1:25	A3
Drawn By	Checked By	Date
DG	AH	16-06-20

Drawing Number	Rev.
BP-6602-E112	C1