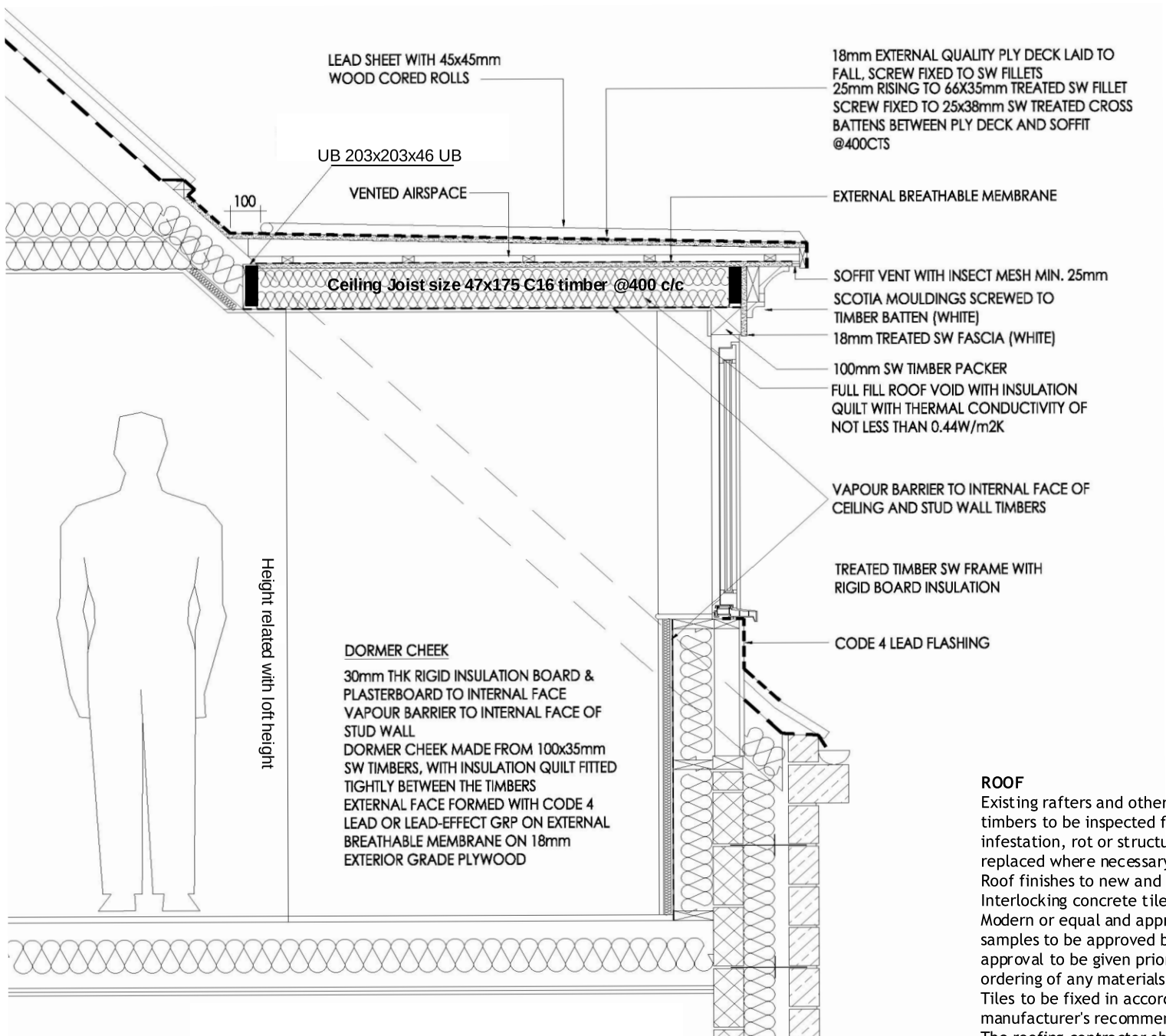

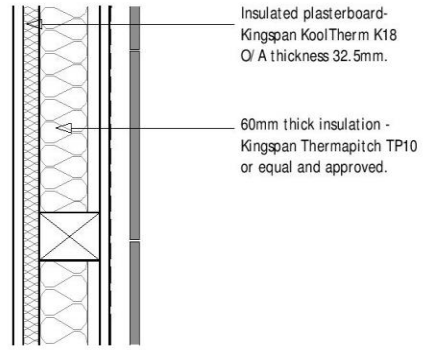

DORMER WALL INSULATION OPTION 1 1/ 10

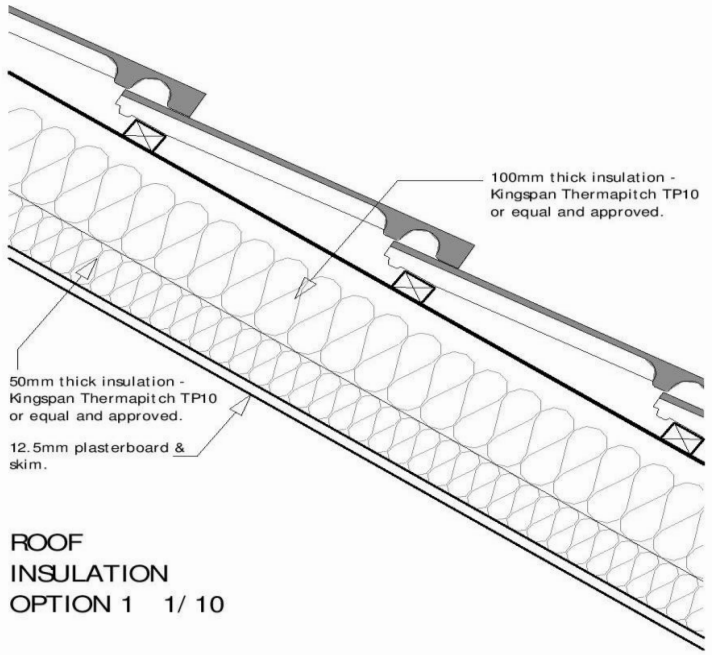

ROOF INSULATION OPTION 1 1/ 10

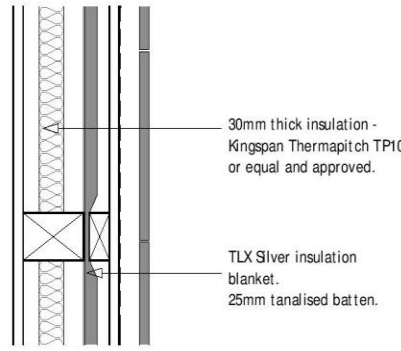

DORMER WALL INSULATION OPTION 2 1/ 10

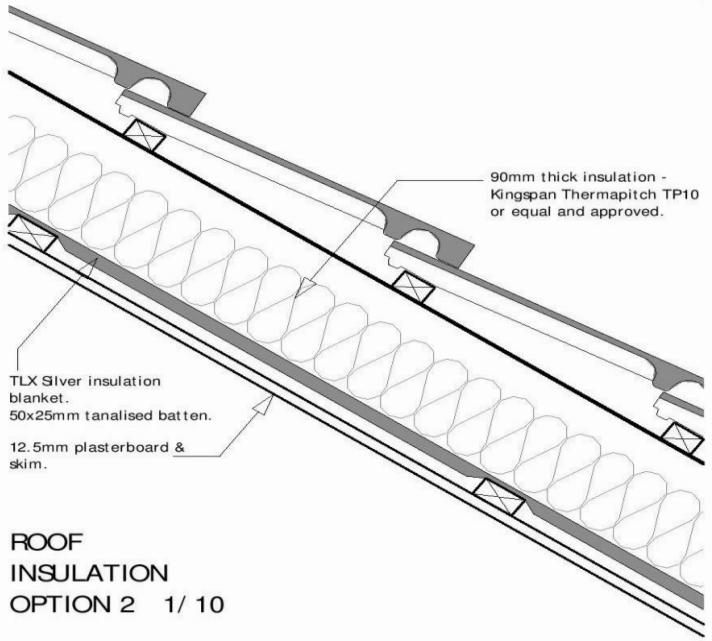

ROOF INSULATION OPTION 2 1/ 10

Proposed Dormer Typical Detail

NOTES

The builder should verify existing conditions, materials, dimensions, construction and equipment requirements prior to ordering materials, notify the designer of any discrepancies.

The builder should verify existing rafter spacing and adjust width of dormer accordingly as required.

The builder should repair / reinstall roof insulation which is temporarily removed in order to accomplish the project, re-tape seams. The builder should take care to protect the existing roof from damage.

Use 100 x 100 x300 pad stone having characteristic strength = 30.0 N/mm2 under steel beams at support.

Dormer Front Wall
The detail of exterior dormer will be as following:
Inside: Skim 5 mm over Plaster board 12.5 mm, over 25 mm King Span over
Stud wall filled with 100 mm Kingspan.
Outside:
For outer side, 18 mm plywood over stud wall, breathable felt over 2x1 battens.

Dormer will be cladded with roof tiles that match with existing roof.

ROOF
Existing rafters and other stru
timbers to be inspected for
infestation, rot or structural fa
replaced where necessary.
Roof finishes to new and existing roof:
Interlocking concrete tiles - Marley Modern or equal and approved - samples to be approved by the client - approval to be given prior to ordering of any materials.
Tiles to be fixed in accordance with the manufacturer's recommendations.
The roofing contractor shall provide a manufacturers fixing specification - Redland Specmaster or equivalent based on the specific details of the development (roof pitch, site topography etc) which shall be forwarded
to the client for approval prior to the commencement of tiling work.
50 x 25mm tanalised battens. Gauge to suit slate size - allowing for min. 100mm headlap.
Battens fixed over breathable felt underlay - Proctor RoofSheild or equal and approved with BBA Certificate for use with unventilated roofs - fixed strictly in accordance with manufacturer's instructions.
Insulation to Bedroom:
Where the roof is to be insulated at rafter level i.e. raked ceiling:

OPTION 1
100mm Kingspan Thermapitch TP10 to be provided between rafters with 50mmKingspan Thermapitch TP10 insulation to be provided to the underside of rafters. SEE DETAIL (RIGHT)

OPTION 2
100mm Kingspan Thermapitch TP10 to be provided between rafters. 1 layer Thinsulex TLX Silver fixed to underside of extended rafters and 25x38mm tanalised counter battens fixed over - to create 25mm air gap.
SEE DETAIL (RIGHT)

Where the roof is to insulated at ceiling joist level i.e. horizontal ceiling - 100mm Knauf Earthwool Loft Roll insulation between joists with a further layer of 175m Knauf Earthwool Loft Roll over the joists.

Underside of ceilings to be plated out with 12.5mm foil backed plasterboard an skim plaster finish.

Design 4 Build Services **77 Fields New Road, Oldham OL9 8BT** **Mob. 07722432673**			
Client	**Mr. Mohammed Shabaz** **58 Kearsley Road** **Manchester M8 4GF**		
Title	**Demolishing of existing side Garage extension and re-erection of double storey extension in addition to single storey extension at rear used as Extended Family Room**		
Scale	**1 = 100@A3**	**Drawing No.**	MS-PP-04 07/02/2021