XECC-0513-EPRM

Project _____
Item _____
Quantity _____
Date _____

Model
CHEFTOP MIND.Maps™ PLUS COMPACT

- Combi steamer
- Electric
- 5 trays GN 1/1
- Hinged left (right hand door)
- 9.5" Touch control panel

DESCRIPTION

Technologically advanced combi oven for gastronomy cooking processes (dehydrating, steaming, low temperature cooking, sous vide cooking, roasting, grilling, pan frying, regeneration and plate regeneration) and for fresh or frozen baking thanks to the Unox Intensive Cooking and Intelligence Performance technologies which guarantee perfect results and repeatability for any load size. Automatic management of cooking processes (CHEFUNOX) for perfect results even without trained staff.

STANDARD COOKING FEATURES

Manual cooking

- **Temperature:** 30 °C – 260 °C
- Up to 9 cooking steps
- **CLIMA.Control:** humidity or dry air set by 10%
- Delta T cooking with core probe
- MULTI.Point core probe
- SOUS-VIDE core probe

Programs

- **1000+** Programs
- **CHEFUNOX:** choose something to cook from the library and the oven will automatically set all the parameters
- **MULTI.TIME:** manages up to 10 cooking processes at the same time
- **MISE.EN.PLACE:** synchronises the insertion of pans so that all the dishes are ready at the same time
- **MIND.Maps™:** draw the cooking processes directly on the display
- **READY.COOK:** ready to use settings for a quick start

STANDARD TECHNICAL FEATURES

- **ROTOR.Klean™:** automatic washing system
- Automatic special washing behind the fan guard
- Cooking chamber in high-resistance AISI 304 stainless steel with rounded edges
- Triple glass
- Cooking chamber lighting through LED lights embedded in the door
- Tray supports with anti-tipping system
- Drip collection system integrated in the door and functional even with the door open
- 4-speed fan system and high-performance circular resistance
- Integrated DET&Rinse™ detergent container
- Integrated Wi-Fi
- **Wi-Fi / USB data:** download/upload HACCP data
- **Wi-Fi / USB data:** download/upload programs

ADVANCED AND AUTOMATIC COOKING FEATURES

Unox Intelligent Performance

- **ADAPTIVE.Cooking™:** automatically regulates the cooking parameters to ensure repeatable results
- **CLIMALUX™:** total control of the humidity in the cooking chamber
- **SMART.Preheating:** sets automatically the temperature and the duration of the preheating
- **AUTO.Soft:** manages the heat rise to make it more delicate
- **SENSE.Klean:** estimates how dirty the oven is and suggests appropriate automatic cleaning

Unox Intensive Cooking

- **DRY.Maxi™:** rapidly extracts the humidity from the cooking chamber
- **STEAM.Maxi™:** produces saturated steam
- **AIR.Maxi™:** manage fans auto-reverse and pulse function
- **PRESSURE.Steam:** increases the saturation and temperature of steam

Data Driven Cooking

- Control and monitor the operating conditions of your ovens in real-time, create and share new recipes. The AI transforms the consumption data into useful information in order to increase your daily profit. Create, understand, improve

APP & WEB SERVICES

- Data Driven Cooking app & webapp
- Top Training app
- Combi guru App

We reserve the right to make technical improvements - 31/7/2020

XECC-0513-EPRM

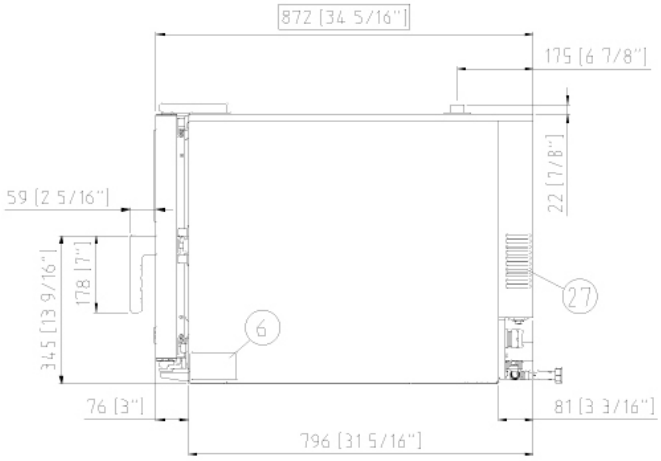

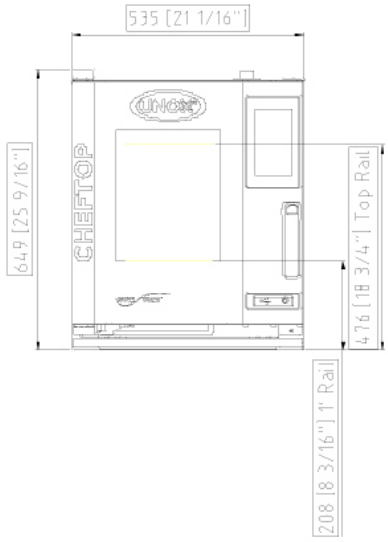

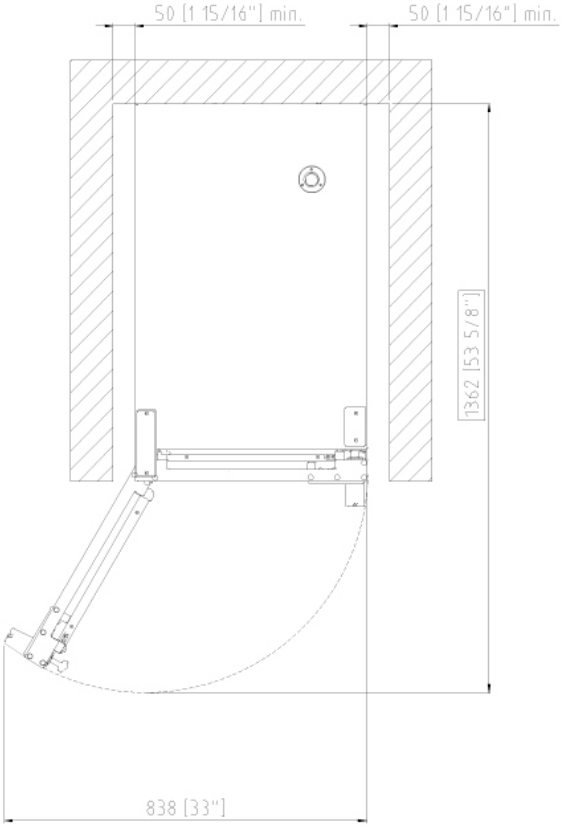

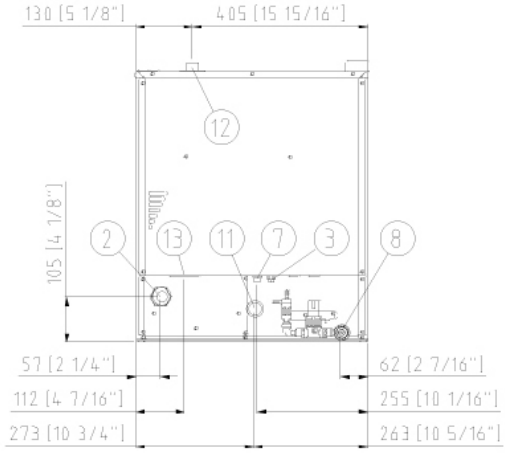

DIMENSIONS AND WEIGHT

Width	535 mm
Depth	872 mm
Height	649 mm
Net Weight	68 kg
Pan spacing	67 mm

CONNECTION POSITIONS

2	Terminal board power supply	10	Rotor.KLEAN™ connection
3	Unipotential terminal	11	Cavity drain pipe
6	Technical data plate	12	Hot fumes exhaust chimney
7	Safety thermostat	13	Accessories connection
8	3/4" Thread water inlet	27	Cooling air outlet

UNOX S.p.A. | Via Majorana 22 - 35010 Cadoneghe PD - Italy - Tel. +39 049 8657511 - Fax. +39 049 8657555 - info@unox.com

XECC-0513-EPRM

POWER SUPPLY

STANDARD

Voltage	380-415 V
Phase	3PH+N+PE
Frequency	50-60 Hz
Total power	9.3 kW
Maximum Amp Draw	14 A
Required breaker size*	20 A
Power cable requirement	H07RN-F 5G 2.5 mm²
Cord diameter	16 mm
Plug	NOT INCLUDED

OPTION A

Voltage	220-240 V
Phase	3PH+PE
Frequency	50-60 Hz
Total power	9.3 kW
Maximum Amp Draw	23.6 A
Required breaker size*	32 A
Power cable requirement	H07RN-F 4G 4 mm²
Cord diameter	16 mm
Plug	NOT INCLUDED

WATER SUPPLY

USING A WATER SUPPLY NOT MEETING UNOX's MINIMUM WATER QUALITY STANDARDS WILL VOID ANY WARRANTY.

It is the responsibility of the purchaser to ensure that the incoming water supply is compliant with the specifications listed through adequate treatment measures.

Line pressure:	Drinking water inlet: 3/4" NPT*, line pressure: 22 to 87 psi; 1.5 to 6 Bar (29 psi; 2 Bar recommended)

Inflow water specifications

Free chlorine	≤ 0.1 ppm
Chloramine	≤ 0.1 ppm
pH	7 - 8.5
TDS	≤ 125 ppm
Electrical conductivity	≤ 1000 µS/cm

Steam circuit: inflow water specifications

Total hardness (TH)	≤ 8 °dH (142 ppm)
Chlorides	≤ 25 ppm

To avoid the formation of limescale the incoming water must have total hardness ≤ 8°dH (142 ppm).

Wash circuit: inflow water specifications

Total hardness (TH)	≤ 30 °dH (534 ppm)
Chlorides	≤ 120 ppm

ACCESSORIES

- **DET&Rinse™ PLUS:** cleaning and rinse agents to combine maximum cleanliness with minimum consumption and long life for your oven
- **DET&Rinse™ ECO:** eco formula for daily cleaning and the utmost respect for the environment. Ideal for mild level of dirt.
- **Ventless hood:** steam condensing hood
- **Ventless hood with activated carbon filter:** steam condensing hood with activated carbon filter
- **Cooking Essentials:** special trays
- QUICK.Load and trolley system
- **PURE:** the filter reduces the carbonate hardness in water, thus avoiding scale deposits inside the oven cooking chamber
- **PURE-RO:** reverse osmosis system that eliminates Chlorides and limescale from water
- Ethernet connection kit
- **HYPER.Smoker:** smoker box for wood chips and sawdust to smoke inside the cooking chamber without extra electrical supply

INSTALLATION REQUIREMENTS

Installations must comply with all local electrical systems, particularly as for minimum wire gauge required for field connection, hydraulic and ventilation supply. Exhaust and fume analysis must be performed in case of gas ovens.

Register to access data and product specifications
infonet.unox.com

UNOX S.p.A. | Via Majorana 22 - 35010 Cadoneghe PD - Italy - Tel. +39 049 8657511 - Fax. +39 049 8657555 - **info@unox.com**