REPORT ON COAL MINING RELATED SITE INVESTIGATIVE WORKS

UNDERTAKEN ON LAND AT THE

MANCHESTER VELODROME (PLANT ROOM), NATIONAL CYCLING CENTRE, STUART STREET, MANCHESTER M11 4DQ

Prepared for:-

LK Consult Limited
29 Eton Business Park
Eton Hill Road
Radcliffe
M26 2ZS

On Behalf Of:-

ISG plc

The Land Consultancy Limited
Fairweather House
4 Parker Lane
Whitestake
Preston
Lancashire
PR4 4JX

T163 SFK (TLC1134) rep BS LKConsult 010621
June 2021

Project Quality Assurance
Information Sheet

Report on Coal Mining Site Investigative Works undertaken on Land at the Manchester Velodrome (Plant Room), National Cycling Centre, Stuart Street, Manchester M11 4DQ.

Report Number	: TLC1134	***Report Status***	: Final
Survey Dates	: 4th to 6th May 2021	***Report Date***	: June 2021

Prepared for : LK Consult Limited
29 Eton Business Park
Eton Hill Road
Radcliffe
M26 2ZS

On behalf of : ISG plc

Prepared by : The Land Consultancy Ltd
Fairweather House
4 Parker Lane
Whitestake
Preston
Lancashire
PR4 4JX

Written by : Stephen F. Knott

Stephen F. Knott B.Sc. (Hons), Ph.D., F.G.S.

Director

Report Issue Record		
Revision	**Date of Issue**	**Comments**
0	01/06/2021	First Issue

CONTENTS

1.0 INTRODUCTION

2.0 SITE LOCATION AND DESCRIPTION

3.0 GEOLOGY AND MINING

4.0 FIELDWORKS

5.0 GROUND CONDITIONS

6.0 CONCLUSIONS AND RECOMMENDATIONS

APPENDICES

APPENDIX A - DRAWINGS

APPENDIX B - EXPLORATORY HOLE LOGS

APPENDIX C - COAL AUTHORITY PERMIT

1.0 INTRODUCTION

1.1 LK Consult Ltd has been appointed to support a planning application, on behalf of ISG plc, for the erection of a new plant room area located adjacent to the north of the existing National Cycling Centre velodrome building. The site is located off Stuart Street, Manchester and the nearest postcode to the site is M11 4DQ. The boundary line of the proposed plant room area and internal layout are indicated on Drawing No. TLC1134/03 in Appendix A.

1.2 A coal mining risk assessment[1] issued for the site by LK Consult Ltd in October 2020 indicated that the proposed plant room area was potentially at risk from future coal mining related ground subsidence. LK Consult Ltd subsequently approached TLC to look at the potential for the site to be affected by shallow coal seams/workings and mine entries, and to provide advice related to investigating the site using rotary drill holes.

1.3 TLC was then instructed by LK Consult Ltd to investigate the site for historical mining related legacy issues. Specifically, LK Consult's remit to TLC included:

- Scoping the amount of site investigation work required to investigate the property for shallow coal seams/workings;
- Obtaining permission from The Coal Authority to carry out the site investigation work; and,
- Producing a factual and interpretive report on the findings of the site investigation work. This report would indicate whether the site is actually affected by shallow coal seams/workings, and whether the consolidation of shallow workings/potential workings is necessary prior to development works proceeding.

1.4 Limitations

1.4.1 The assessment and interpretation of the factual data obtained as part of this investigation has been undertaken in accordance with generally accepted consulting practice, and in line with the following document: CIRIA, C758D dated 2019 and entitled 'Abandoned mine workings manual'.

1.4.2 The conclusions and recommendations made in this report are limited to those which can be made based on the findings of this survey and information provided by third parties. TLC assumes all third-party data to be true and correct. No responsibility can be accepted by TLC for inaccuracies in the information supplied by any other party.

1.4.3 Ground conditions can change rapidly, especially in areas of Made Ground; however, it is assumed that that the ground conditions observed are typical and representative of the site as a whole. The ground conditions have been determined from a limited number of exploratory holes, therefore only a small percentage of the total area of the property has been investigated. Conclusions drawn from the ground investigation should be read in this context. TLC cannot accept responsibility for any situations resulting from locally unforeseen ground conditions occurring between exploratory holes.

1.4.4 This report is written in the context of an agreed scope of works and should not be used in a different context. Furthermore, new information, improved practices and changes in legislation may require a re-interpretation of the report in whole or in part after its original submission. TLC reserves the right to alter its conclusions and recommendations in the

[1] LK Consult Ltd report dated October 2020, referenced LKC 20 1527 and entitled 'Manchester Velodrome (Plant Room)', 'Desk Based Coal Mining Risk Assessment'. This report was completed on behalf of ISG plc.

light of further information which may become available. This report is provided for the sole use of the Client and is confidential to them and their professional advisors.

2.0 SITE LOCATION AND DESCRIPTION

2.1 The National Cycling Centre is located within the Bradford district of east Manchester. The site and large sections of this area of east Manchester have been progressively regenerated over the last ≈25 years; the regeneration works have largely involved the replacement of former industrial land with sports stadia and retail facilities. The site is located ≈3.5km east of the city centre.

2.2 Site location plans are presented in Drawing Nos. TLC1134/01a and 01b in Appendix A. AMEC Design and Management Limited velodrome plans were also provided to TLC and these are also presented in Appendix A. A Google Earth image of the site is presented in Drawing No. TLC1134/02.

2.3 The proposed plant room area is located adjacent to the north of the existing velodrome building and can be approximately centred at the following coordinates: 387350E, 398840N. The site is currently surfaced with either concrete flagstones or concrete hardstanding and is used as a service, storage and vehicle parking area.

2.4 As can be seen from Drawing No. TLC1134/03 in Appendix A, 2no. above ground concrete 'thrust blocks' are located in the west and east of proposed plant room area. The AMEC drawings indicate that 1.5m and 2.1m diameter piles are present beneath the blocks - these are assumed to carry a substantial portion of load associated with the velodrome building's roof. The installation depth of the piles is not provided on the AMEC drawings.

2.5 The plant room area as a whole is roughly rectangular in shape (orientated east to west), occupies an area of ≈1,000m^2 and is situated at an altitude of ≈72m AOD. The topography of the site an immediate surrounding area is roughly level.

3.0 PUBLISHED GEOLOGY AND MINING SUMMARY

3.1 The likely site geology and mining situation (coal focussed), as determined by LK Consult Ltd and supplemented where possible by TLC, is summarised in the table below.

MADE GROUND	The site is indicated to be underlain by undivided artificial deposits.
DRIFT	Devensian age Glacial Till (diamicton).
ROCK	Carboniferous rock strata - Pennine Upper Coal Measures (undifferentiated strata) Undifferentiated strata often comprise of cyclical sequences of sandstone, siltstone, mudstone, coal seams and seat earths; marine bands and ironstone horizons are also occasionally present.
ROCK DIP	Rock strata in the general area of the site dips down to the SW at around 15°.
FAULTING	The site and immediate surrounding area are not affected by known faulting. The nearest fault (NNW-SSE trending) is located ≈140m to the E.
COAL SEAMS	1:10,560 scale mapping** indicates that a coal seam (NW-SE strike - possibly the Slack Lane or Two Feet coal seam) sub-crops beneath the drift through the NE corner of the site. The Coal Authority identify this coal seam as being the New coal seam. Given the SW ≈15° rock dip angle, this coal seam is expected to be present beneath the majority of the site at shallow depth. The BGS* indicate that Slack Lane coal seam is 0.30m thick and has not been worked. A further coal seam (unnamed) is indicated to sub-crop ≈60m to the NE of the site. There is also potential for this coal seam to be present beneath the site at shallow depth too. The above coal seams are not displayed on 1:50,000 scale BGS mapping which probably implies that they are thin and/or discontinuous and unworked. The Bradford Four Foot coal seam is indicated to sub-crop ≈125m SW of the site. However, this coal seam will not be present beneath the site due to the south-westerly rock dip angle. The site is not considered to be at risk from any further coal seams.
COAL AUTHORITY (CA) INFORMATION	The CA indicate that: • Coal mining has taken place beneath the site at depths of ≥185m. • The site (away from the far NE corner) is located within an area considered to be at risk from unrecorded probable shallow coal workings. • There are no known mine entries within at least 100m of the site. • The site and surrounding area are not affected by known faults, fissures or breaklines. • The site and immediate surrounding area are not affected by known opencast coal mining. It should be noted that CA records are incomplete prior to 1872.
OTHER INFORMATION	The BGS* suggest that the superficial strata (Made Ground and drift) in the immediate vicinity of the site could be around 20m thick. BGS borehole records indicated that: A historical borehole sunk ≈30m NW of the site penetrated the Made Ground at 3.30m depth and then proved stiff reddish brown gravelly CLAY (Glacial Till) to the borehole termination depth (8.00m); a further borehole sunk ≈130m SW penetrated the Made Ground at 2.90m depth and then proved similar Glacial Till materials to 18.70m bgl; grey MUDSTONE was then proven to 21.00m bgl. The CA do not specifically indicate that the coal seams indicated above are at high risk of succumbing to spontaneous combustion† when entered into, worked or disturbed. However, the CA states that within the Lancashire coalfield, there could be a risk of spontaneous combustion where roof coal has been left following working. The CA also say that the majority of lower risk coal seams could also be at risk from suffering from spontaneous combustion depending upon the method by which they have been entered, worked or disturbed. Historical maps reviewed by LK Consult Ltd did not identify any coal mining related features within at least 400m of the site. 1:10,560 scale mapping indicates that a mining tunnel (NE-SW trending) passes through the site. However, this is indicated to be present at significant depth beneath the site (>500m).

* - BGS publication dated 2012 and entitled 'Geology of the Manchester district: a brief explanation of the geological map Sheet 85 Manchester'.
** - 1:10,560 scale geology map dated 1931 (Lancashire Sheet 104NE).
† - Coal Authority document entitled 'Coal Seams with a History of Spontaneous Combustion'.

3.2 In summary, desk study information suggests the proposed development is at low risk from ground subsidence related to roof collapse and surface crown hole formation over probable unrecorded shallow workings within the Slack Lane and unnamed coal seam. The risk to the proposed development from potential workings within any other coal seams is considered to be negligible.

3.3 The site is not at risk from recorded mine entries. The site is considered to be at very low risk from unrecorded mine entries.

4.0 FIELDWORKS

4.1 Open Hole Rotary Drilling

4.1.1 Open hole rotary drilling, to determine whether the property is actually affected by shallow coal seams/workings, has been undertaken at 4no. locations (RH101a, RH101b, RH102 and RH103) beneath the footprint of the proposed plant room area. All holes were terminated within Made Ground well above the scheduled drilling depth of 40m bgl – all holes refused within probable concrete containing steel reinforcement bar.

4.1.2 RH101b was drilled a short distance away from RH101a which were both sunk in the west of the proposed plant room area. RH101a and RH101b were both terminated at 5.50m bgl. RH102 was sunk beneath the east of the plant room area and was terminated at 6.30m bgl. RH103 was sunk beneath the middle of the plant room area and was terminated at 3.60m bgl.

4.1.3 The drilling works were undertaken by Taylor Drilling Services Ltd (TDS) on the 6th May 2021, using a Commachio 205 rotary drilling rig fitted with a pcd drill bit. The drilling flushing medium comprised of air mist.

4.1.4 The rotary holes were sited away from known service runs (LK Consult Ltd had obtained service plans). Hole locations were cleared with a cable avoidance tool. As a final check for services, hand pits were excavated to 1.20m depth. Rotary drilling commenced from the base of each hand pit.

4.1.5 Drill hole locations are indicated on Drawing No. TLC1134/03 in Appendix A and the logs are presented in Appendix B. Strata descriptions to 1.20m were made by a geo-environmental engineer from LK Consult Ltd. Strata descriptions below 1.20m bgl were made by the TDS drilling foreman and are based off fragments recovered within the drilling flush and rate of progress of the drill string.

4.2 General

4.2.1 Cable tool percussion boring was also carried out at 4no. locations (CP101 to CP104) beneath the proposed plant room by LK Consult Ltd as part of a geo-environmental investigation of this area. These logs are also presented in Appendix B. The cable tool percussion boring works were carried out between the 4th and 5th May 2021 and the borehole locations are displayed on Drawing No. TLC1134/03 in Appendix A. Several foundation pits and 2no. dynamic cone penetrometer holes were also sunk beneath the plant room area by LK Consult Ltd; however, this information was not provided to TLC.

4.2.2 The boreholes were terminated at depths of either 3.45m or 5.30m bgl.

4.2.3 Prior to rotary drilling, permission to intersect shallow coal seams beneath the site was first obtained by TLC from the Coal Authority. The permit certificate is presented in Appendix C.

4.2.4 During rotary drilling operations, gas readings were taken at regular intervals from around the mouth of the drill hole and from around the rig using a calibrated gas analyser.

4.2.5 Upon reaching completion depth, all drill holes were backfilled with a mixture of arisings and bentonite and the appropriate surfacing material was reinstated.

5.0 GROUND CONDITIONS

5.1 Made Ground

5.1.1 Made Ground was encountered within each exploratory hole and could not be penetrated with either the cable tool or rotary drilling rigs. The Made Ground was proven to depths of between 3.45m bgl (CP101-CP103) and 6.30m bgl (RH102) only.

5.1.2 Reinforced concrete (up to 0.20m thick) or concrete paving slabs (up to 0.10m thick) were recorded at the ground surface. The flags or reinforced concrete were underlain by a 0.05-0.25m thick horizon of MOT type material (yellowish brown gravelly SAND).

5.1.3 A 0.20m thick layer of concrete was encountered directly beneath the MOT in CP101.

5.1.4 Granular Made Ground, comprising of a brownish grey sandy clayey GRAVEL with low cobble content, was recorded beneath the shallow CP101 concrete and MOT type material generally. A single horizon of concrete (at least 0.50-1.05m thick) was encountered at the base of the granular Made Ground in the cable tool percussion boreholes; the boreholes all refused in this concrete at either 3.45m or 5.30m depth.

5.1.5 Several horizons of concrete, with granular Made Ground layers in between, were encountered towards the base of RH102 and RH103 Made Ground. These holes refused at 6.30m and 3.60m depth respectively on probable steel bar reinforced concrete. RH101a and RH101b both refused on probable steel bar reinforced concrete at 5.50m bgl. The probable steel bar reinforced concrete was proven to be at least 0.10m to 0.50m thick.

5.1.6 Gravel and cobble constituents recorded within the granular Made Ground encountered below the MOT layer included brick, concrete, limestone, mudstone and clinker; plastic and metal fragments were also observed. The gravels within the MOT type material; comprised of sandstone and limestone.

5.2 Glacial Till and Pennine Upper Coal Measures Strata

5.2.1 These strata were not encountered within the exploratory holes.

5.3 Groundwater

5.3.1 No groundwater was recorded within the exploratory holes.

5.4 Ground Gas

5.4.1 No detectable concentrations of methane, carbon dioxide, carbon monoxide or hydrogen sulphide, or any oxygen depletions were measured during rotary drilling operations.

6.0 CONCLUSIONS AND RECOMMENDATIONS

6.1 Desk study researches indicated that the site would be underlain by Made Ground over Glacial Till over Pennine Upper Coal Measures strata (CMS). The superficial materials are possibly in the order of 20m thick and the Glacial Till is likely to comprise of stiff gravelly CLAY. Rock dips were expected to be at around 15° and down to the SW. The site and immediate surrounding area were not indicated to be affected by known faulting.

6.2 1:10,560 scale geological mapping shows a coal seam (possibly the Slack Lane, a.k.a. Two Feet) to sub-crop beneath the Glacial Till drift through the east of site (NW-SE strike); the Coal Authority refer to this as being the New coal seam. A further unnamed coal seam was indicated to sub-crop ≈60m to the NE. With a 15° SW rock dip angle, these coal seams are potentially present beneath the site at shallow depth below the rock head surface. The BGS indicate that the Slack Lane coal seam is 0.30m thick and has not been worked. The above two coal seams are not indicated on BGS 1:50,000 scale mapping which suggests that they are thin and/or discontinuous and have not been worked.

6.3 The Coal Authority (CA) are not aware of any shallow coal mining having taken place beneath the site (the shallowest known worked coal is at 185m bgl). However, the CA indicate that the site is at risk from ground subsidence related to probable unrecorded shallow coal workings associated with the possible Slack Lane coal seam. The site is not considered to be at risk from known mine entries. It should be noted that the CA's records are incomplete <1872.

6.4 In summary, TLC considered that the proposed development was at low risk from ground subsidence related to collapse of unrecorded workings within the above coal seams. The proposed development was considered to be at very low risk from unrecorded mine entries.

6.5 To help confirm the low shallow mining risk and geology beneath the plant room area the intension was to sink 2no. rotary drill holes to 40m depth. However, in the end, 4no. drill holes were sunk to depths of between 5.50m and 6.30m bgl with all holes refusing in reinforced concrete. No further progress was possible. Clayey granular Made Ground containing cobbles and horizons of concrete were encountered above the refusal depths. No groundwater was observed.

6.6 Although it has not been possible to prove conclusively that the proposed plant room area is not affected by shallow coal seams/shallow coal workings, as the desk-based evidence suggests that the risk of the proposed plant room area being affected by future coal mining related ground subsidence is low, further investigative and or proof drilling/grouting works are not considered necessary prior to development works proceeding.

6.7 General Advice

6.7.1 A watching brief is recommended in all coal mining areas for unrecorded coal mining related features. On this site TLC recommends that the watching brief is carried out by suitably experienced site staff, as the risk of the site being affected by unrecorded mine shafts is considered to be very low. The watching brief should cover the period in which any earthworks, reduce level dig or foundation excavation works are being undertaken. Particular care should be taken to identify any potential features which may indicate the presence of shallow coal mining hazards.

6.7.2 Such hazards may include, but not limited to, features such as unexplained depressions or voids, outcropping coal seams, localised areas of deep made ground (which could represent backfilled areas of coal mining related ground subsidence, crown holes or mine entries), or unexpected man-made items at depth (e.g. brickwork, concrete, timber or steelwork).

6.7.3 Mine entries may manifest during excavation works as circular, square or rectangular areas of deep Made Ground (typically several metres in size) set against the natural lighter coloured natural strata (completely/highly weathered rock on this site). Mine shafts may also be covered with a large, thick concrete cap.

6.7.4 If any of the above features are identified during the course of the development works then work should be stopped to allow the mining engineer / consultant to assess them and, if necessary, design further or additional investigation and / or remediation works.

APPENDICES

APPENDIX A

DRAWINGS



Reproduced from Ordnance Survey Mapping with permission
©Crown Copyright The Land Consultancy Limited License No. 100043992

N

THE LAND CONSULTANCY LIMITED
Fairweather House, 4 Parker Lane, Whitestake, Preston PR4 4JX
Tel: 01772 610609; M: 07771 800859
email: sfknott@thelandconsultancy.co.uk; www.thelandconsultancy.co.uk

Project:
Manchester Velodrome, National Cycling Centre, Stuart Street, Manchester M11 4DQ

Title:
Site Location Plan

Scale:	**Drawn by:**	**Date:**
Km Grid Squares	SFK	25/11/2020

Drawing No.: TLC1134/01a

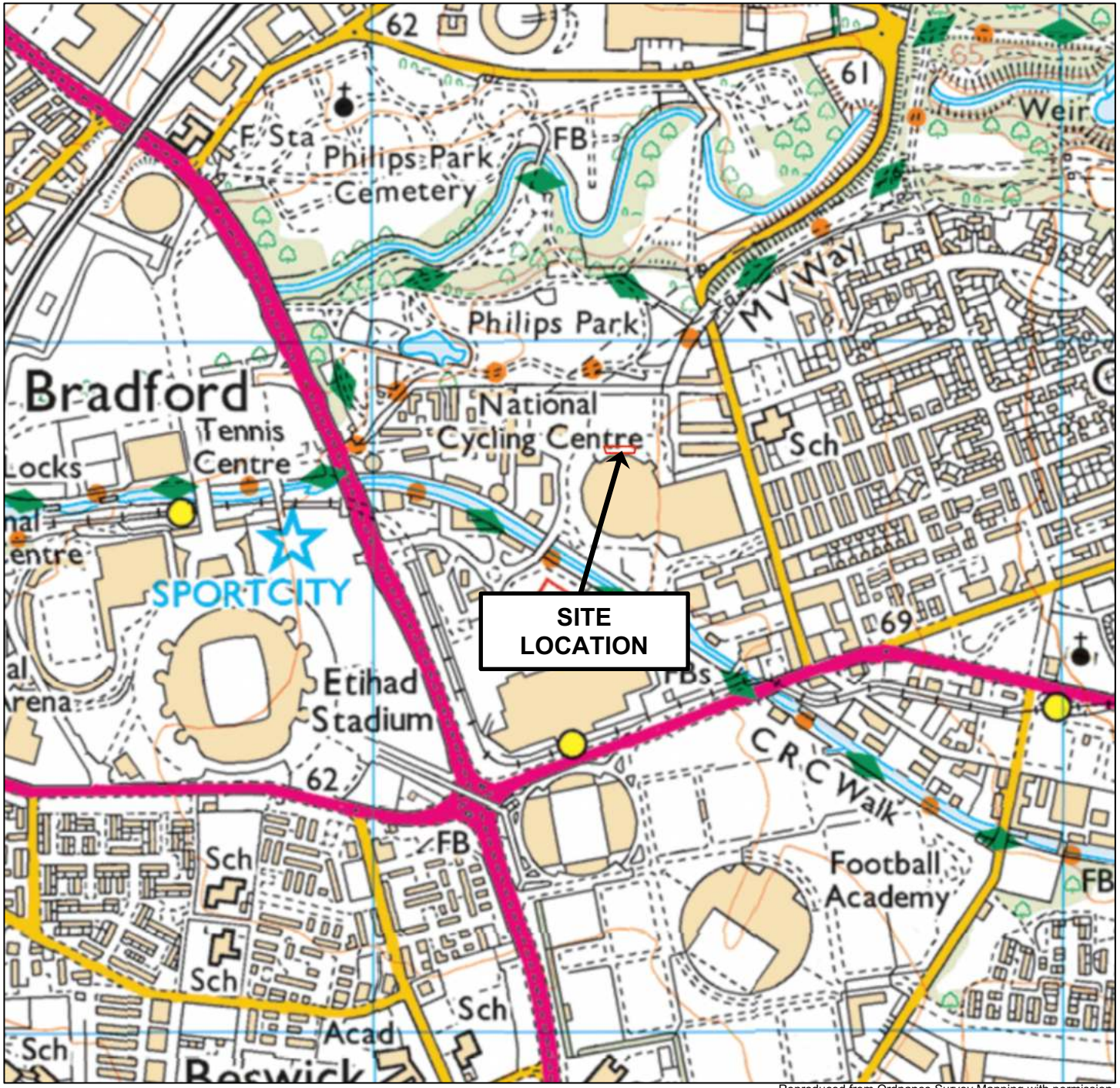

N

Reproduced from Ordnance Survey Mapping with permission
©Crown Copyright The Land Consultancy Limited License No. 100043992

THE LAND CONSULTANCY LIMITED
Fairweather House, 4 Parker Lane, Whitestake, Preston PR4 4JX
Tel: 01772 610609; M: 07771 800859
email: sfknott@thelandconsultancy.co.uk; www.thelandconsultancy.co.uk

Project:
Manchester Velodrome, National Cycling Centre, Stuart Street, Manchester M11 4DQ

Title:
Site Location Plan

Scale:	**Drawn by:**	**Date:**
Km Grid Squares	SFK	25/11/2020

Drawing No.: TLC1134/01b

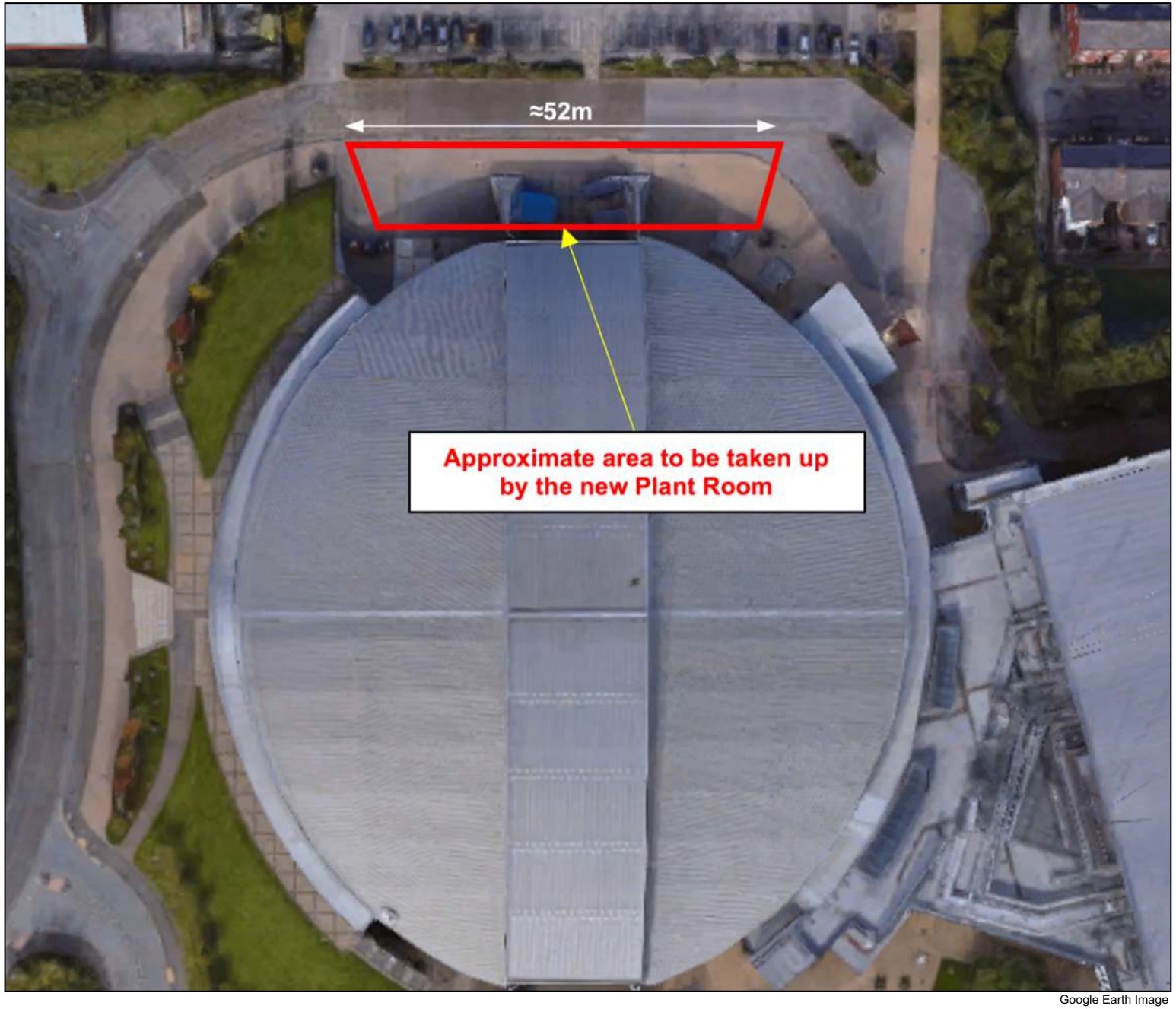

Google Earth Image

N

THE LAND CONSULTANCY LIMITED
Fairweather House, 4 Parker Lane, Whitestake, Preston PR4 4JX
Tel: 01772 610609; M: 07771 800859
email: sfknott@thelandconsultancy.co.uk; www.thelandconsultancy.co.uk

Project:
Manchester Velodrome, National Cycling Centre, Stuart Street, Manchester M11 4DQ

Title:
Google Earth Aerial Image displaying Existing Site Layout

Scale:	**Drawn by:**	**Date:**
As Shown	SFK	01/06/2021

Drawing No.: TLC1134/02

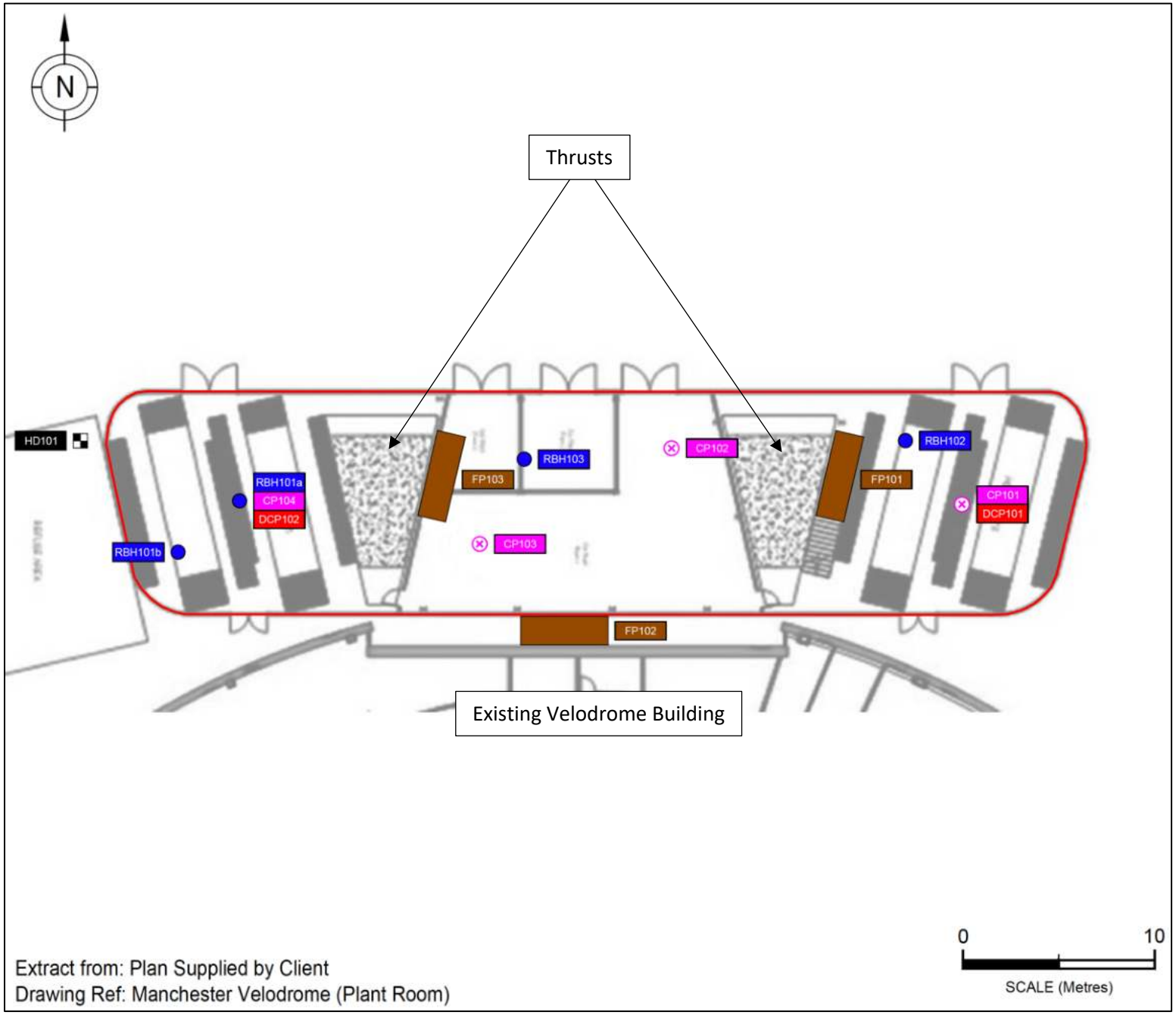

Extract from: Plan Supplied by Client
Drawing Ref: Manchester Velodrome (Plant Room)

KEY

- Site Boundary
- Hand Dug Trial Pit (HD)
- Rotary Borehole (RBH)
- Cable Percussive Borehole (CP)
- Dynamic Cone Penetrometer Hole (DCP)
- Foundation Pit (FP)

THE LAND CONSULTANCY LIMITED
Fairweather House, 4 Parker Lane, Whitestake, Preston PR4 4JX
Tel: 01772 610609; M: 07771 800859
email: sfknott@thelandconsultancy.co.uk; www.thelandconsultancy.co.uk

Project:
Manchester Velodrome, National Cycling Centre, Stuart Street, Manchester M11 4DQ

Title:
Plant Room Proposed Layout Plan displaying Exploratory Hole Locations

Scale:	**Drawn by:**	**Date:**
As Shown	SFK	01/06/2021

Drawing No.: TLC1134/03

NOTES

1. EXISTING FOUNDATIONS TO BE BROKEN OUT AT INTERVALS OF 2 NO PILES ON NORTH END OF BUILDING AND BACKFILLED WITH SUITABLE FILL MATERIAL FROM SITE WORKS.
2. BREAKING OUT TO BE A MIN OF 250 BEYOND PILE PERIMETER (i.e. 2500 wide for 2000 dia piles)
3. ALL EXCAVATIONS TO BE FILLED BACK TO EXISTING GROUND LEVEL AND COMPACTED AS BACKING IN.
4. DENOTES DEPOSITION OF FILL MATERIAL FROM THE SITE MOUND SPREAD OVER THE AREA INDICATED WITH THE TOP LEVEL OF THE FILLING AS INDICATED (i.e. 61.500)
ANY LARGE PIECES OF CONCRETE FILL MATERIAL WHICH ARE UNSUITABLE FOR TREATING BY DYNAMIC COMPACTION ARE TO BE REMOVED PRIOR TO SPREADING THE FILL MATERIAL OVER THE BUILDING AREA.
5. THIS DRAWING TO BE READ IN CONJUNCTION WITH ANY OTHER ARCHITECT'S DRAWINGS.

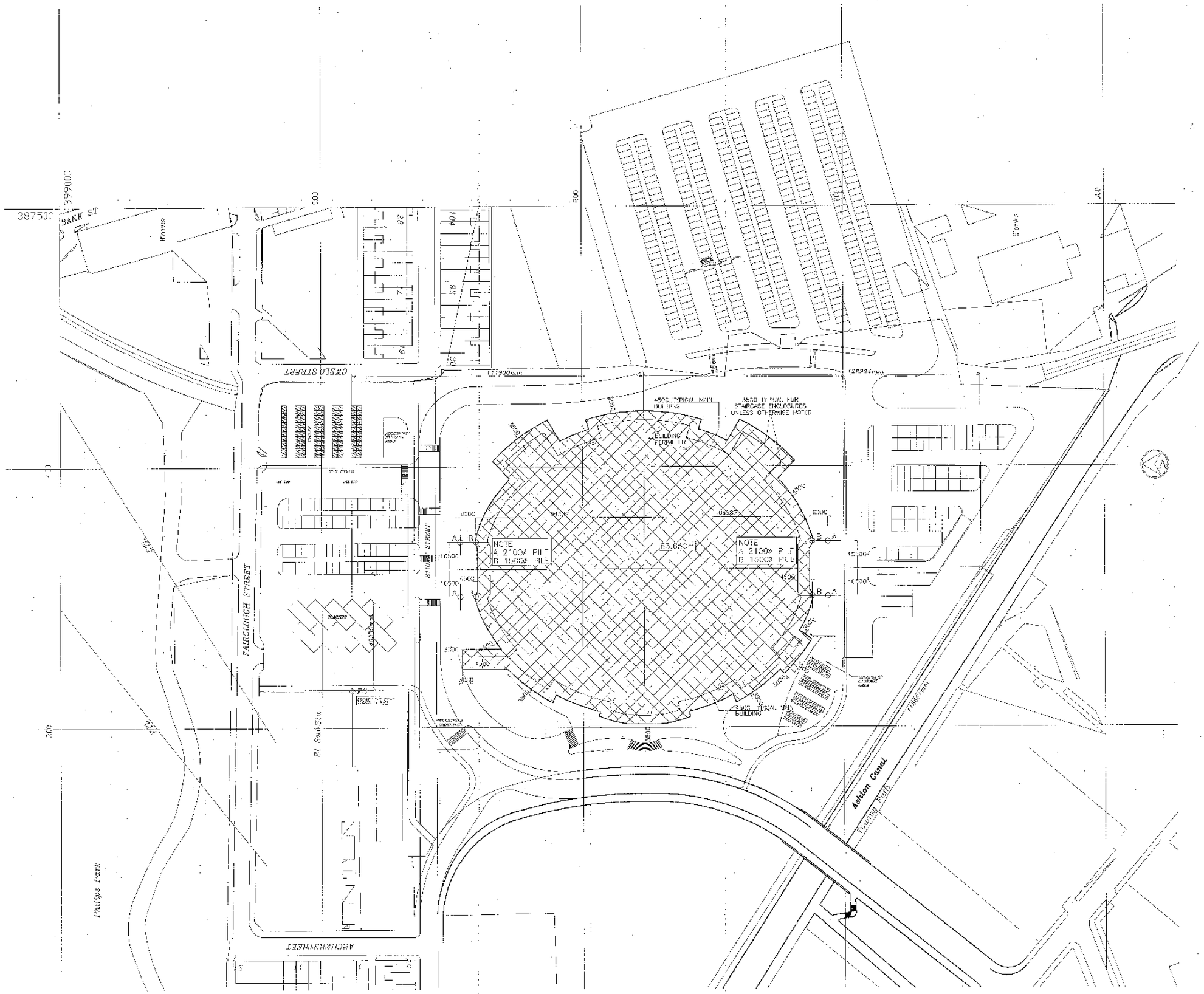
BANK ST
CHELO STREET
FAIRCLOUGH STREET
ARCHIMEDES WAY
Phillips Park
Ashton Canal
Pedestrian Crossing
Works
Works
Works

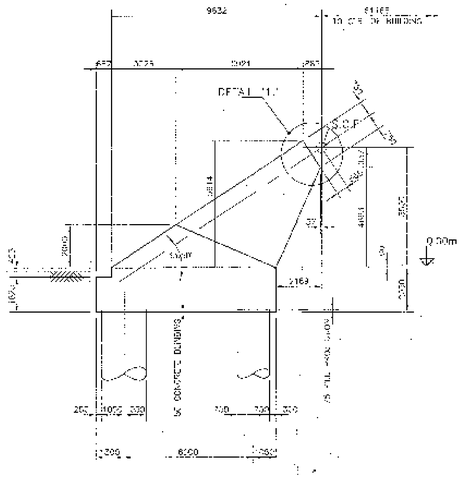

ELEVATION ON "A".

SCALE = 1:100

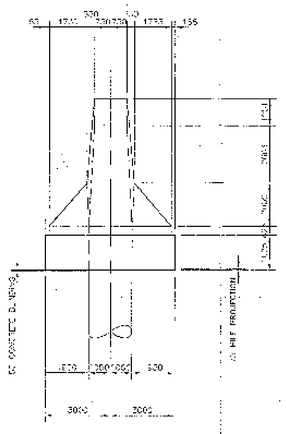

ELEVATION ON "B".

SCALE = 1:100

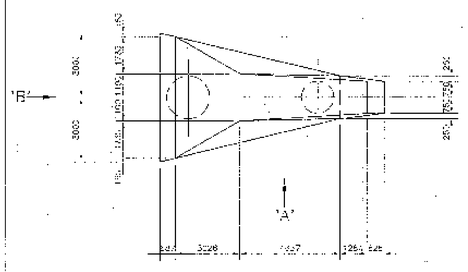

PLAN ON THRUST BLOCK (4 No:THUS)

SCALE = 1:100

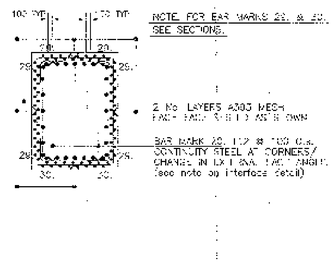

SECTION '3'-'3'.

TYPICAL ARRANGEMENT OF MESH.

SCALE = 1:50

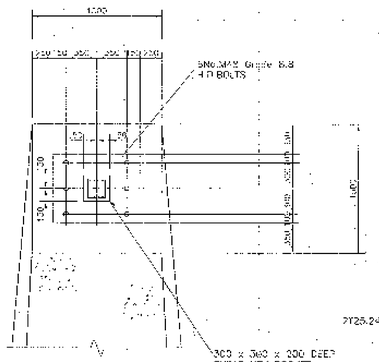

SECTION 'X'-'X'

SCALE = 1:25

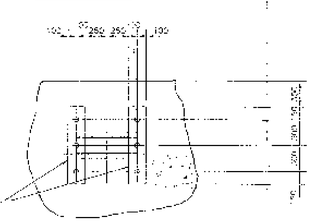

SECTION 'Y'-'Y'

SCALE = 1:25

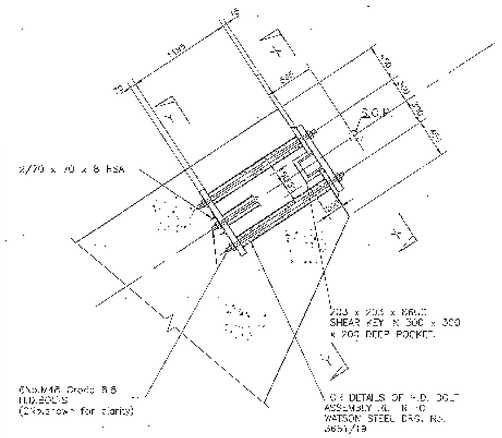

DETAIL '1' – STEELWORK TO THRUST BLOCK CONNECTION

SCALE = 1:25

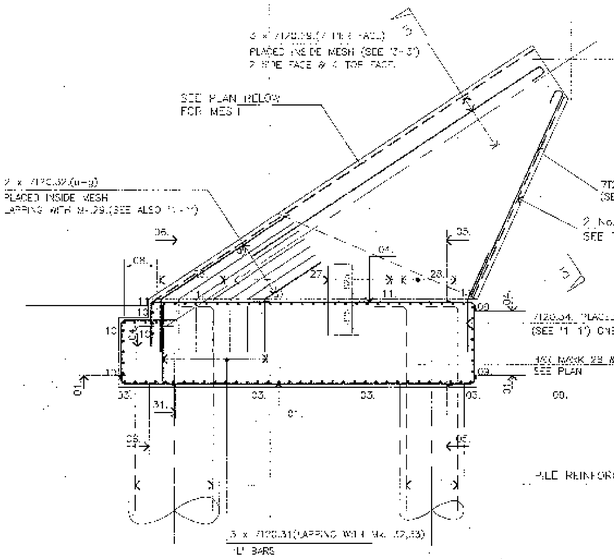

SECTION '2'-'2'.

SCALE = 1:50

NOTE: MESH TO BE SET OUT AS INDICATED ON SECTION '2'-'2' AND TYPICAL BLOCK PLAN. ALL MESH TO BE IN 2 No. LAYERS INCLINED IN PLANE WITH A MIN. 450mm. APART. (SEE 'MESH INTERFACE CONTINUITY DETAIL')

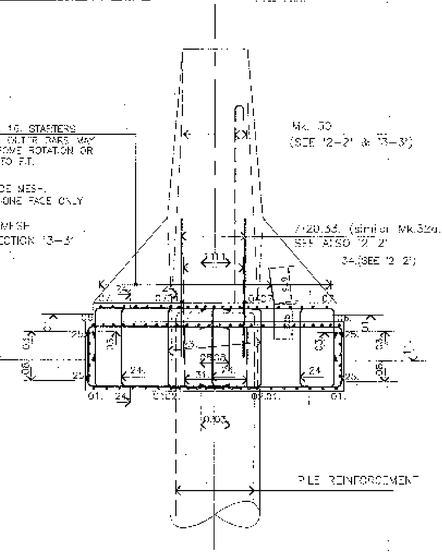

NOTE: BAR MARK 24 (2 No.) in background shown for clarity.

SECTION '1'-'1'

SCALE = 1:50

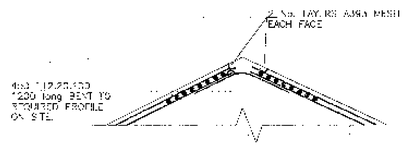

MESH INTERFACE CONTINUITY DETAIL (TYPICAL) DETAIL APPLIES AT EACH CHANGE IN PROFILE.

SCALE = 1:20

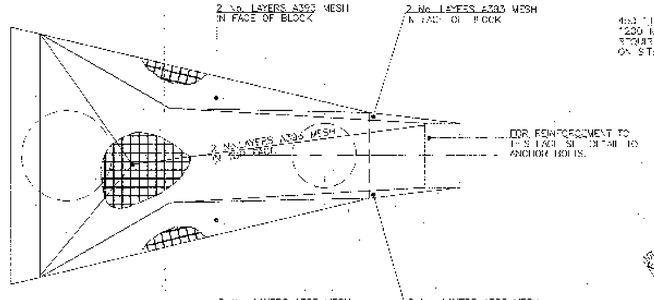

R.C. PLAN ON TOP OF THRUST BLOCK

SCALE = 1:50

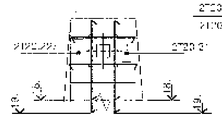

VIEW 'Z1'

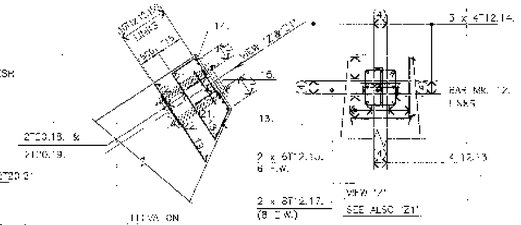

REINFORCEMENT DETAIL TO ANCHOR BOLTS

SCALE = 1:50

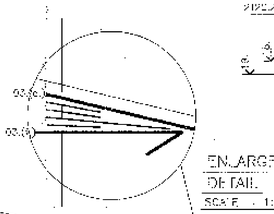

ENLARGED DETAIL

SCALE = 1:25

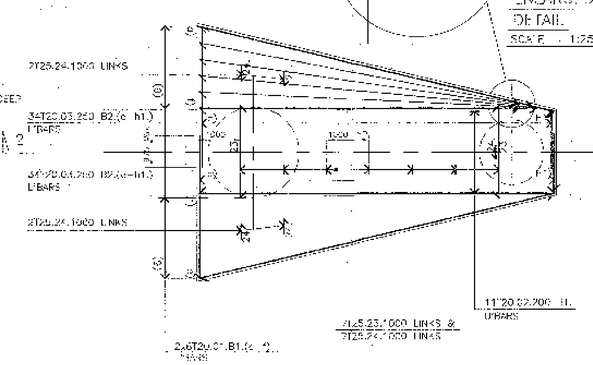

R.C. PLAN ON THRUST BLOCK BASE (BOTTOM)

SCALE = 1:50

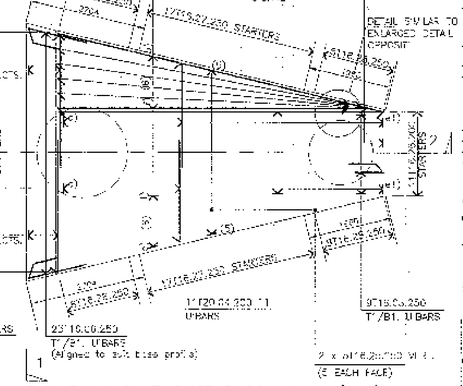

R.C. PLAN ON THRUST BLOCK BASE (TOP)

EXTENT OF STARTER BARS TO BE READ WITH SECTIONS

SCALE = 1:50

NOTES.

1. ANY DISCREPANCY BETWEEN THIS DRAWING AND ANY OTHER INFORMATION MUST BE REPORTED TO THE PROJECT MANAGER.
2. ALL DIMENSIONS TO BE CHECKED ON SITE BEFORE COMMENCEMENT OF WORKS.
3. USE WRITTEN DIMENSIONS ONLY. DO NOT SCALE
4. ALL DIMENSIONS ARE IN MILLIMETRES.
5. ALL AMEC DESIGN AND MANAGEMENT DRAWINGS TO BE READ IN CONJUNCTION WITH ALL RELEVANT FAULKNER BROWN ARCHITECTURAL DRAWINGS.
6. FOR SETTING OUT OF RECTANGULAR GRID AND CIRCULAR DIMENSIONS REFER TO FAULKNER BROWN DRAWINGS A(90)1 AND A(28)'2.
7. FOR LOCATION OF THRUST BLOCKS REFER TO AMEC DESIGN AND MANAGEMENT DRAWING No. 6182/2134.
8. CONCRETE STRENGTH TO ATTAIN A MIN. CUBE CRUSHING STRENGTH OF 35 N/mm2. AT 28 DAYS WITH A MIN (OPC) CEMENT CONTENT OF 350 Kg/m3 & MAX. AGGREGATE SIZE OF 20mm AND A MAX. FREE WATER/ CEMENT RATIO OF 0.5 BY WEIGHT.
9. COVER TO REINFORCEMENT AT BOTTOM OF 25mm PILE & GROSS 0 BE 45mm. COVER TO REINFORCEMENT BETWEEN PILES (ie WATER BUSH HAMMERING DEPTHS) TO BE 65mm.
10. FOR BAR BENDING DETAILS SEE SCHEDULE SHEET Nos. 6182/2103/01 to 03 Inc.
11. FOR DETAILS OF ARCHITECTURAL FINISHES REFER TO FAULKNER BROWN DRG No. A(90)W(28)2.
12.
13. MINIMUM TENSION LAPS TO BE AS FOLLOWS.
T10 = 500mm.
T12 = 600mm
T16 = 770mm.
T20 = 975mm.
T25 = 1200mm.
14. FOR DETAILS OF PILE REINFORCEMENT REFER TO PILING CONTRACTORS DRAWING.
15. CONTRACTOR TO ENSURE THAT COVER TO MESH IS MAINTAINED DURING ERECTION AND POURING OF CONCRETE BY ADEQUATE TYING TO SHUTTERING OR OTHER MEANS.

NOTE -

T1 = TOP LAYER REINFORCEMENT
T2 = SECOND LAYER REINFORCEMENT FROM TOP
B1 = BOTTOM LAYER REINFORCEMENT
B2 = SECOND LAYER REINFORCEMENT FROM BOTTOM
EW. = EACH WAY

AS BUILT DRAWING

No.	DESCRIPTION OF REVISION	Date	By
0	Mesh layers & T1 revised	30/09/08	M.A.P.
A	Concrete Piling wood chocks note removed	03/10/08	M.A.P.
	Reference added near BOM to Grid Marking		
	Revision added near BOM to Grid Marking		
	Bar mark 24 amended from 10 to 12 dia.		
	Section 'Z1' amended from 'A' to 'B'		
	Title & 3D model updated		

Project: 6182
Client: AMEC BUILDING LTD NORTHERN DIVISION
Title: MANCHESTER VELODROME THRUST BLOCK – G.A. AND R.C. DETAILS
Drawn: J.P.MCBRIEN
Design: A.P.
Check: A.J.T.
Date: MARCH
Approved: J.B.M.
Date: MARCH
Scale: 1:100

AMEC Design and Management

AMEC Design and Management Limited

Drawing No: 6182/2103 Rev: C

APPENDIX B

EXPLORATORY HOLE LOGS

LK CONSULT LTD Eton Business Park, Eton Hill Road, Radcliffe, M26 2ZS Tel: 0161 763 7200 web: www.thelkgroup.com		**Site** Velodrome ISG	**Borehole Number** RBH101A
Machine : **Flush** : Mist **Core Dia:** mm **Method** : Rotary Open Hole	**Casing Diameter** **Location** (Observed measurements) 387342 E 398847 N	**Ground Level (mOD)** 66.00 **Dates** 04/05/2021-05/05/2021	**Client** ISG plc **Engineer** LKC	**Job Number** LKC 20 1527 **Sheet** 1/1

Depth (m)	TCR (%)	SCR (%)	RQD (%)	FI	Field Records	Level (mOD)	Depth (m) (Thickness)	Description	Legend	Water
						65.95	0.05 (0.25)	MADE GROUND: Paving slab.		
						65.70	0.30	MADE GROUND: Yellowish brown gravelly SAND. Sand is fine to coarse. Gravel is fine to coarse, angular to subangular comprising limestone and sandstone. Probable MOT.		
							(0.90)			
						64.80	1.20	MADE GROUND: Brownish grey sandy clayey GRAVEL with low brick and sandstone cobble content, occasional brick fragments, clinker, plastic pieces and metal fragments. Sand is fine to coarse. Gravel is fine to coarse, angular comprising limestone and mudstone. Rotary hole advanced from CP104, soil descriptions above 1.20mbgl extracted from CP104 log. Material logged from hand dug pits prior to drilling.		
								1. Rotary flush presented MADE GROUND brick and sandstone chippings. Similar to brick made ground material above.		
							(3.80)			
						61.00	5.00	1. Rotary flush presented CONCRETE chippings. Possible steel reinforcement bar present at depth given density and limited advancement at depth.		
							(0.50)			
						60.50	5.50	Terminated at 5.50m		

Remarks
Borehole terminated at 5.50mbgl in possible concrete with steel reinforcement bar.
Rotary borehole terminated shallow of 40.00mbgl due to concrete/steel obstruction at 5.50mbgl.
Elevation estimated from https://www.freemaptools.com/elevation-finder.htm.
Location estimated from https://gridreferencefinder.com/, and is accurate to 3-5m.
Descriptions from drillers logs below 1.20mbgl.
Rotary hole advanced from CP104, soil descriptions above 1.20mbgl extracted from CP104 log.
1. Drillers logs

Scale (approx)	Logged By
1:50	BR

Figure No.
LKC 20 1527.RBH101A

Produced by the GEOtechnical DAtabase SYstem (GEODASY) © all rights reserved

LK GROUP	LK CONSULT LTD Eton Business Park, Eton Hill Road, Radcliffe, M26 2ZS Tel: 0161 763 7200 web: www.thelkgroup.com	Site Velodrome ISG	Borehole Number RBH101B
Machine : Flush : Mist Core Dia : mm Method : Rotary Open Hole	Casing Diameter Location (Observed measurements) 387344 E 398851 N	Ground Level (mOD) 66.00 Dates 04/05/2021-05/05/2021	Client ISG plc Engineer LKC	Job Number LKC 20 1527 Sheet 1/1

Depth (m)	TCR (%)	SCR (%)	RQD (%)	FI	Field Records	Level (mOD)	Depth (m) (Thickness)	Description	Legend	Water
						65.95	0.05 (0.25)	MADE GROUND: Paving slab.		
						65.70	0.30	MADE GROUND: Yellowish brown gravelly SAND. Sand is fine to coarse. Gravel is fine to coarse, angular to subangular comprising limestone and sandstone. Probable MOT.		
							(0.90)			
						64.80	1.20	MADE GROUND: Brownish grey sandy clayey GRAVEL with low brick and sandstone cobble content, occasional brick fragments, clinker, plastic pieces and metal fragments. Sand is fine to coarse. Gravel is fine to coarse, angular comprising limestone and mudstone. Material logged from hand dug pits prior to drilling.		
								1. Rotary flush presented MADE GROUND brick and sandstone chippings. Similar to made ground brick material above.		
							(3.80)			
						61.00	5.00	1. Rotary flush presented CONCRETE chippings. Possible steel reinforcement bar present at depth given density and limited advancement when drilling. Termination at the same depth as RBH101a.		
							(0.50)			
						60.50	5.50	Terminated at 5.50m		

Remarks
Rotary borehole terminated shallow of 40.00mbgl due to possible concrete with steel reinforcement bar at 5.50mbgl
Elevation estimated from https://www.freemaptools.com/elevation-finder.htm.
Borehole terminated at 5.50mbgl in possible concrete with steel reinforcement bar. The same depth at RBH101a.
Location estimated from https://gridreferencefinder.com/, and is accurate to 3-5m.
1. Drillers logs

Scale (approx)	Logged By
1:50	BR

Figure No.
LKC 20 1527.RBH101A

Produced by the GEOtechnical DAtabase SYstem (GEODASY) © all rights reserved

LK GROUP

LK CONSULT LTD
Eton Business Park, Eton Hill Road, Radcliffe, M26 2ZS
Tel: 0161 763 7200 web: www.thelkgroup.com

Site	Borehole Number
Velodrome ISG	RBH102

Machine :	Casing Diameter	Ground Level (mOD)	Client	Job Number
Flush : Mist		66.00	ISG plc	LKC 20 1527
Core Dia : mm				
Method : Rotary Open Hole	Location (Observed measurements) 387376 E 398850 N	Dates 04/05/2021-05/05/2021	Engineer LKC	Sheet 1/1

Depth (m)	TCR (%)	SCR (%)	RQD (%)	FI	Field Records	Level (mOD)	Depth (m) (Thickness)	Description	Legend	Water
						65.80	(0.20) 0.20	CONCRETE with rebar, approximate diameter 5mm.		
						65.70	0.30	MADE GROUND: Yellowish brown gravelly SAND. Sand is fine to coarse. Gravel is fine to coarse, angular to subangular comprising limestone and sandstone. Probable MOT.		
							(0.90)			
						64.80	1.20	MADE GROUND: Brownish grey sandy clayey GRAVEL with low brick and sandstone cobble content, frequent concrete and brick fragments. Sand is fine to coarse. Gravel is fine to coarse, angular comprising limestone and mudstone. Materials logged from hand dug pits prior to drilling. 1. Rotary flush presented MADE GROUND chippings comprising brick and other constituents. Noted to be similar material to 0.3-1.2mbgl.		
							(1.80)			
						63.00	3.00	1. Rotary flush presented CONCRETE chippings.		
							(2.50)			
						60.50	5.50	1. Rotary flush presented MADE GROUND chippings comprising brick and other constituents. Noted to be similar material to brick made ground above.		
							(0.50)			
						60.00	6.00	1. Rotary flush presented CONCRETE chippings with possible steel reinforcement bar given density and limited advancement when drilling.		
							(0.30)			
						59.70	6.30	Terminated at 6.30m		

Remarks
Rotary borehole terminated shallow of 40.00mbgl due to possible concrete with reinforcement bar at 6.30mbgl.
Elevation estimated from https://www.freemaptools.com/elevation-finder.htm.
Borehole terminated at 6.30mbgl.
Location estimated from https://gridreferencefinder.com/, and is accurate to 3-5m.
1. Drillers Logs

Scale (approx)	Logged By
1:50	BR

Figure No.
LKC 20 1527.RBH102

Produced by the GEOtechnical DAtabase SYstem (GEODASY) © all rights reserved

LK GROUP
LK CONSULT LTD
Eton Business Park, Eton Hill Road, Radcliffe, M26 2ZS
Tel: 0161 763 7200 web: www.thelkgroup.com

Site Velodrome ISG			**Borehole Number** RBH103
Machine : Flush : Mist; Core Dia : mm; Method : Rotary Open Hole	**Casing Diameter**	**Ground Level (mOD)** 66.00	**Client** ISG plc	**Job Number** LKC 20 1527
	Location (Observed measurements) 387358 E 398850 N	**Dates** 04/05/2021-05/05/2021	**Engineer** LKC	**Sheet** 1/1

Depth (m)	TCR (%)	SCR (%)	RQD (%)	FI	Field Records	Level (mOD)	Depth (m) (Thickness)	Description	Legend	Water
						65.90	0.10 (0.20)	MADE GROUND: Paving slab.		
						65.70	0.30 (0.30)	MADE GROUND: Yellowish brown gravelly SAND. Sand is fine to coarse. Gravel is fine to coarse, angular to subangular comprising limestone and sandstone. Probable MOT.		
						65.40	0.60 (0.40)	MADE GROUND: Brownish grey sandy clayey GRAVEL with occasional brick fragments, concrete fragments and plastic pieces. Sand is fine to coarse. Gravel is fine to coarse, angular comprising limestone and mudstone. Material logged from hand dug pits prior to drilling.		
						65.00	1.00 (1.10)	1. Rotary flush presented CONCRETE chippings.		
								1. Rotary flushed presented MADE GROUND chippings, comprising brick fragments, timber, plastic and sandstone.		
						63.90	2.10 (0.30)	1. Rotary flush presented CONCRETE chippings.		
						63.60	2.40 (1.10)	1. Rotary flushed presented MADE GROUND chippings, comprising brick fragments and sandstone.		
						62.50	3.50	1. Rotary flush presented CONCRETE chippings with possible steel reinforcement bar given density and limited advancement when drilling.		
						62.40	3.60	Terminated at 3.60m		

Remarks
Elevation estimated from https://www.freemaptools.com/elevation-finder.htm.
Borehole terminated at 6.30mbgl.
Location estimated from https://gridreferencefinder.com/, and is accurate to 3-5m.
1. Drillers Logs

Scale (approx)	Logged By
1:50	BR

Figure No. LKC 20 1527.RBH103

Produced by the GEOtechnical DAtabase SYstem (GEODASY) © all rights reserved

LK CONSULT LTD Eton Business Park, Eton Hill Road, Radcliffe, M26 2ZS Tel: 0161 763 7200 web: www.thelkgroup.com		**Site** Velodrome ISG	**Borehole Number** CP101
Boring Method Cable Percussion	**Casing Diameter** 150mm cased to 2.00m	**Ground Level (mOD)** 66.00	**Client** ISG plc	**Job Number** LKC 20 1527
	Location (Observed measurements) 387377 E 398847 N	**Dates** 04/05/2021-05/05/2021	**Engineer** LKC	**Sheet** 1/1

Depth (m)	Sample / Tests	Casing Depth (m)	Water Depth (m)	Field Records	Level (mOD)	Depth (m) (Thickness)	Description	Legend	Water
					65.85	(0.15) 0.15	CONCRETE with rebar, approximate diameteer 5mm.		
					65.65	(0.20) 0.35	Yellowish brown gravelly SAND. Sand is fine to coarse. Gravel is fine to coarse, angular to subangular comprising limestone and sandstone. Probable MOT.		
0.60	D2				65.45	(0.20) 0.55	CONCRETE.		
0.60-1.00	ES1 PID=0.2ppm						MADE GROUND: Brownish grey sandy clayey GRAVEL with low brick and sandstone cobble content, frequent concrete and brick fragments. Sand is fine to coarse. Gravel is fine to coarse, angular comprising limestone and mudstone.		
1.20-1.65	SPT N=10			2,3/3,3,2,2		(1.85)			
1.20-1.65	S3								
1.50	D4								
2.30-2.70	SPT 50/250			2,3/13,26,11	63.60	2.40	CONCRETE.		
2.30-2.70	S5					(1.05)			
3.20-3.35	SPT 25*/60 50/90			25/50	62.55	3.45	Terminated at 3.45m		
3.20-3.35	S6								
3.40-3.45	SPT 25*/20 50/30			25/50					
3.40-3.45	S7								

Remarks
Location estimated from https://gridreferencefinder.com/, and is accurate to 3-5m.
Elevation estimated from https://www.freemaptools.com/elevation-finder.htm.
Borehole terminated at 3.45mbgl in concrete, SPT taken between 3.40-3.45mbgl.
Borehole dry and stable.
Chiselling from 2.30m to 3.40m for 1.5 hours.

Scale (approx)	Logged By
1:50	BR

Figure No.
LKC 20 1527.CP101

Produced by the GEOtechnical DAtabase SYstem (GEODASY) © all rights reserved

LK GROUP	**LK CONSULT LTD** Eton Business Park, Eton Hill Road, Radcliffe, M26 2ZS Tel: 0161 763 7200 web: www.thelkgroup.com	**Site** Velodrome ISG	**Borehole Number** **CP102**
Boring Method Cable Percussion	**Casing Diameter** 150mm cased to 3.00m	**Ground Level (mOD)** 66.00	**Client** ISG plc	**Job Number** LKC 20 1527
	Location (Observed measurements) 387364 E 398853 N	**Dates** 04/05/2021-05/05/2021	**Engineer** LKC	**Sheet** 1/1

Depth (m)	Sample / Tests	Casing Depth (m)	Water Depth (m)	Field Records	Level (mOD)	Depth (m) (Thickness)	Description	Legend	Water
					65.95	0.05	MADE GROUND: Paving slab.		
					65.80	(0.15) 0.20			
0.30-0.80	ES1 PID=0.1ppm						MADE GROUND: Yellowish brown gravelly SAND. Sand is fine to coarse. Gravel is fine to coarse, angular to subangular comprising limestone and sandstone.		
							MADE GROUND: Brownish grey sandy clayey GRAVEL with low brick and sandstone cobble content, occasional brick fragments, clinker, plastic pieces and metal fragments. Sand is fine to coarse. Gravel is fine to coarse, angular comprising limestone and mudstone.		
1.20-1.65 1.20-1.65	SPT N=17 S2			1,1/2,3,4,8					
						(3.00)			
2.30-2.75 2.30-2.75	SPT N=17 S3			4,4/5,4,4,4					
				Water strike(1) at 3.10m, rose to 3.00m in 20 mins.	62.80	3.20	CONCRETE.		
3.20-3.25 3.40-3.45 3.20-3.25	S4 S5 SPT 25*/30 50/20			25/50	62.55	(0.25) 3.45			
3.40-3.45	SPT 25*/20 50/30			25/50			Terminated at 3.45m		

Remarks
Location estimated from https://gridreferencefinder.com/, and is accurate to 3-5m.
Elevation estimated from https://www.freemaptools.com/elevation-finder.htm.
Borehole terminated at 3.45mbgl in concrete. SPT taken between 3.40-3.45mbgl.
Perched groundwater noted at 3.10mbgl.
Borehole stable.
Chiselling from 3.20m to 3.40m for 0.5 hours.

Scale (approx)	Logged By
1:50	

Figure No.
LKC 20 1527.CP102

Produced by the GEOtechnical DAtabase SYstem (GEODASY) © all rights reserved

LK GROUP	**LK CONSULT LTD** Eton Business Park, Eton Hill Road, Radcliffe, M26 2ZS Tel: 0161 763 7200 web: www.thelkgroup.com	**Site** Velodrome ISG	**Borehole Number** **CP103**

Boring Method	**Casing Diameter**	**Ground Level (mOD)**	**Client**	**Job Number**
Cable Percussion	150mm cased to 2.50m	66.00	ISG plc	LKC 20 1527
	Location (Observed measurements) 387356 E 398847 N	**Dates** 04/05/2021- 05/05/2021	**Engineer** LKC	**Sheet** 1/1

Depth (m)	Sample / Tests	Casing Depth (m)	Water Depth (m)	Field Records	Level (mOD)	Depth (m) (Thickness)	Description	Legend	Water
					65.95	0.05 (0.25)	MADE GROUND: Paving slab.		
0.30-1.00	ES1 PID=0.2ppm				65.70	0.30	MADE GROUND: Yellowish brown gravelly SAND. Sand is fine to coarse. Gravel is fine to coarse, angular to subangular comprising limestone and sandstone. Probable MOT.		
1.20-1.60 1.20-1.60	SPT 50/250 S2			8,15/15,13,13,9			MADE GROUND: Brownish grey sandy clayey GRAVEL with moderate concrete cobble content, low brick cobble content, occasional brick fragments, clinker, plastic pieces and metal fragments. Sand is fine to coarse. Gravel is fine to coarse, angular comprising limestone and mudstone.		
						(2.90)			
2.20-2.65 2.20-2.65	SPT N=16 S3			6,5/4,4,4,4					
					62.80	3.20 (0.25)	CONCRETE.		▽1
3.20-3.30 3.40-3.45 3.20-3.30 3.40-3.45	S4 S5 SPT 25*/70 50/30 SPT 25*/30 50/20			Water strike(1) at 3.20m. 25/50 25/50	62.55	3.45	Terminated at 3.45m		

Remarks
Location estimated from https://gridreferencefinder.com/, and is accurate to 3-5m.
Elevation estimated from https://www.freemaptools.com/elevation-finder.htm.
Borehole terminated at 3.45mbgl in concrete, SPT taken between 3.40-3.45mbgl.
Perched groundwater noted at 3.20mbgl.
Borehole stable.
Chiselling from 1.20m to 2.20m for 0.25 hours. Chiselling from 3.20m to 3.40m for 0.5 hours.

Scale (approx)	**Logged By**
1:50	BR

Figure No.
LKC 20 1527.CP103

Produced by the GEOtechnical DAtabase SYstem (GEODASY) © all rights reserved

LK GROUP

LK CONSULT LTD
Eton Business Park, Eton Hill Road, Radcliffe, M26 2ZS
Tel: 0161 763 7200 web: www.thelkgroup.com

Site	Borehole Number
Velodrome ISG	CP104

Boring Method	Casing Diameter	Ground Level (mOD)	Client	Job Number
Cable Percussion	150mm cased to 4.00m	66.00	ISG plc	LKC 20 1527

Location (Observed measurements)	Dates	Engineer	Sheet
387342 E 398847 N	04/05/2021-05/05/2021	LKC	1/1

Depth (m)	Sample / Tests	Casing Depth (m)	Water Depth (m)	Field Records	Level (mOD)	Depth (m) (Thickness)	Description	Legend	Water
					65.95	0.05 (0.25)	MADE GROUND: Tarmacadam.		
0.30-1.00	ES1 PID=0.2ppm				65.70	0.30	MADE GROUND: Yellowish brown gravelly SAND. Sand is fine to coarse. Gravel is fine to coarse, angular to subangular comprising limestone and sandstone. Probable MOT.		
1.20-1.65 1.20-1.65	SPT N=50 DB2			25/50			MADE GROUND: Brownish grey sandy clayey GRAVEL with low brick and sandstone cobble content, occasional brick fragments, clinker, plastic pieces and metal fragments. Sand is fine to coarse. Gravel is fine to coarse, angular comprising limestone and mudstone.		
2.00-2.45 2.00-2.45	SPT N=50 DB3			10,15/50					
						(4.50)			
3.00-3.45 3.00-3.45	SPT N=50 DB4			15,10/50					
4.00-4.50	B5			Water strike(1) at 4.20m, rose to 3.90m in 20 mins.					▼1 ▽1
					61.20	4.80	CONCRETE.		
						(0.50)			
					60.70	5.30	Terminated at 5.30m		

Remarks
Location estimated from https://gridreferencefinder.com/, and is accurate to 3-5m.
Elevation estimated from https://www.freemaptools.com/elevation-finder.htm.
Borehole terminated at 5.30mbgl in possible concrete. Limited recovery.
Groundwater encountered at 4.2mbgl.
Borehole stable.
Possible concrete with steel encountered at 4.80mbgl, given site ground conditions. Limited recovery therefore cannot determine material.
Chiselling from 4.80m to 5.30m for 1 hour.

Scale (approx)	Logged By
1:50	BR

Figure No.
LKC 20 1527.CP104

Produced by the GEOtechnical DAtabase SYstem (GEODASY) © all rights reserved

APPENDIX C

COAL AUTHORITY PERMISSIONS CERTIFICATE

The Coal Authority

Permit to Enter or Disturb Coal Authority Interests

Permit 21153

Name and Address of Permit Holder:

ISG Plc
5th Floor
Tomorrow Building
Media City UK
Salford
M50 2AB

Site Location:

Manchester Velodrome
National Cycling Centre
Manchester
M11 4DQ

This certificate hereby grants the above named Permit Holder a Permit to carry out:-

Investigation by two boreholes to 40m bgl to determine presence of shallow mine workings/coal seams

within the Authority's interests at the identified site location above as shown on the Grant Permit Boundary (overleaf) for the period of 12 months from the granted date shown below. *The granting of this Permit does not constitute advice given by the Authority in relation to the proposed operations. It is the Permit Holder's responsibility to obtain appropriate health, safety, environmental, technical and legal advice.*

Conditions:

- *Water flush*
- *Gas Monitoring CO, CH_4, CO_2, O_2, H_2S at borehole and rig*
- *Operators undertaking the work must be in possession of this certificate and the Permit boundary plan at the time of works*
- *Appropriate borehole sealing without delay and to withstand site level changes*

Signed: Simeon Burgess Granted Date: ***21/12/2020***

For and on behalf of The Coal Authority

Nominated Representative: Simeon Burgess, Permitting Manager;
The Coal Authority, Permitting Office, 200 Lichfield Lane, Mansfield, Notts, NG18 4RG
Tel: 01623 637450; E-Mail: permissions@coal.gov.uk

The Coal Authority

Granted Permit Boundary

Permit Ref: 21153

Permit Boundary:

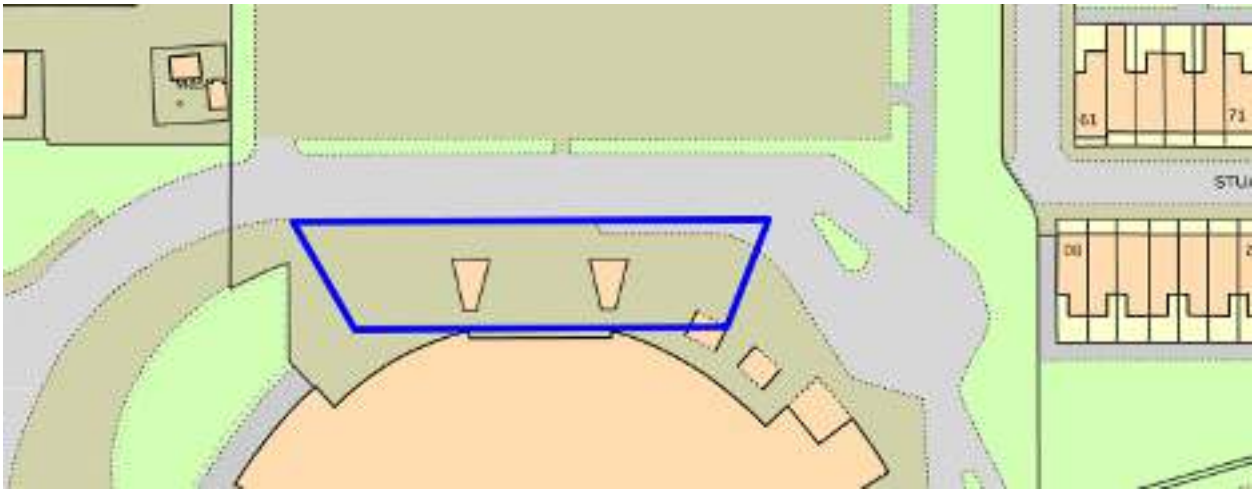

These maps are reproduced from Ordnance Survey material with the permission of Ordnance Survey on behalf of the controller of Her Majesty's Stationary Office. © Crown Copyright. Unauthorised reproduction infringes Crown copyright and may lead to prosecution or civil proceedings. The Coal Authority. Licence No: 100020315. [216]