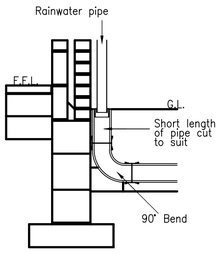

External Rainwater Pipe. Connection Detail

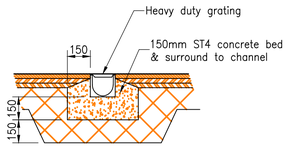

Channel Detail

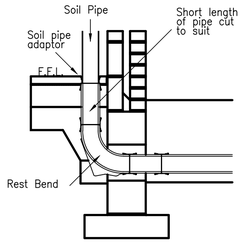

Soil & Vent Pipe Stub Stack or WC Connection

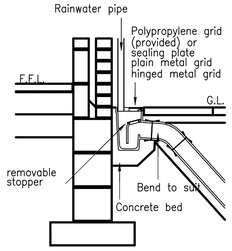

Gully Connection Detail

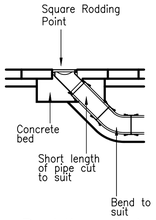

Rodding Point Detail

BUILDING REGULATIONS PART M – THRESHOLD DRAINAGE

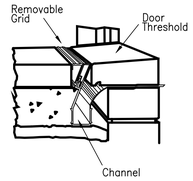

Threshold Drain If required by Architect

MANHOLE SCHEDULE							
MH	CL	IL	DEPTH	TYPE	SIZE	COVER	
SW1	62.575	61.700	0.875m	PPIC	450Ø	D400	
SW2	62.575	61.450	1.125m	PPIC	450Ø	D400	
SW3	62.575	61.700	0.875m	PPIC	450Ø	D400	
SW4	62.150	60.550	1.600m	PPIC	450Ø	D400	CATCHPIT
SW5	62.150	61.250	0.900m	PPIC	450Ø	D400	
SW6	62.150	60.500	1.650m	CONC	1200Ø	D400	HYDROBRAKE
F1	62.575	61.700	0.875m	PPIC	450Ø	D400	
F2	62.575	61.450	1.125m	PPIC	450Ø	D400	
COM1	62.200	60.450	1.750m	PPIC	450Ø	D400	

DO NOT SCALE - IF IN DOUBT ASK

NOTES

1. All private drainage works are to be constructed in accordance with the relevant provisions of BS EN 752 including by reference BS 8301.
2. Manhole invert levels relate to the downstream pipe. Pipes at manholes to be laid with soffits level.
3. Unless otherwise shown, foul pipes to be 100mm dia laid at 1 in 40 minimum gradient unless one w.c. connected where gradient may be 1 in 80 minimum.
4. Unless otherwise shown surface water pipes to be 100mm dia laid at 1 in 100 minimum gradient.
5. Where cover to top of pipe barrel is less than 600mm, pipe to have minimum 150mm ST4 concrete surround.
6. The Contractor is to check invert levels and details of outfall sewers prior to commencing drainage works and the Clients Representative informed of any difference to those shown.
7. Manhole cover levels are indicative and should be adjusted to suit finished levels. Covers are to be fixed to a profile corresponding to the surrounding pavement surface.
8. Manhole covers
   B125 for car park/drives areas not areas subjected to heavy vehicular access. ie Access Road
   A15 for pedestrians and landscape areas.
   All in accordance with BS EN 124 :1994

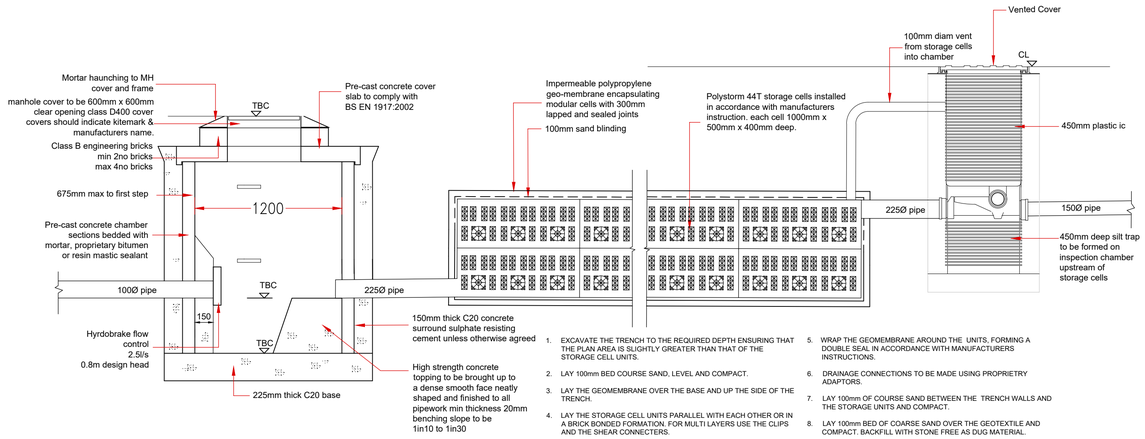

1. EXCAVATE THE TRENCH TO THE REQUIRED DEPTH ENSURING THAT THE PLAN AREA IS SLIGHTLY GREATER THAN THAT OF THE STORAGE CELL UNITS.
2. LAY 100mm BED COURSE SAND, LEVEL AND COMPACT.
3. LAY THE GEOMEMBRANE OVER THE BASE AND UP THE SIDE OF THE TRENCH.
4. LAY THE STORAGE CELL UNITS PARALLEL WITH EACH OTHER OR IN A BRICK BONDED FORMATION. FOR MULTI LAYERS USE THE CLIPS AND THE SHEAR CONNECTERS.
5. WRAP THE GEOMEMBRANE AROUND THE UNITS, FORMING A DOUBLE SEAL IN ACCORDANCE WITH MANUFACTURERS INSTRUCTIONS.
6. DRAINAGE CONNECTIONS TO BE MADE USING PROPRIETRY ADAPTORS.
7. LAY 100mm OF COURSE SAND BETWEEN THE TRENCH WALLS AND THE STORAGE UNITS AND COMPACT.
8. LAY 100mm BED OF COARSE SAND OVER THE GEOTEXTILE AND COMPACT. BACKFILL WITH STONE FREE AS DUG MATERIAL.

SECTION THROUGH ATTENUATION STORM CELLS (1:25)

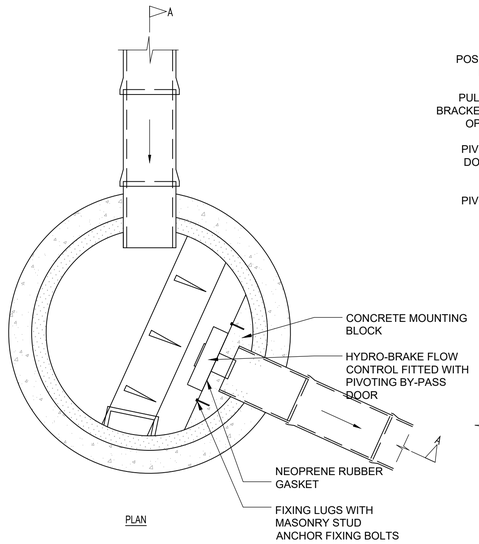

PLAN

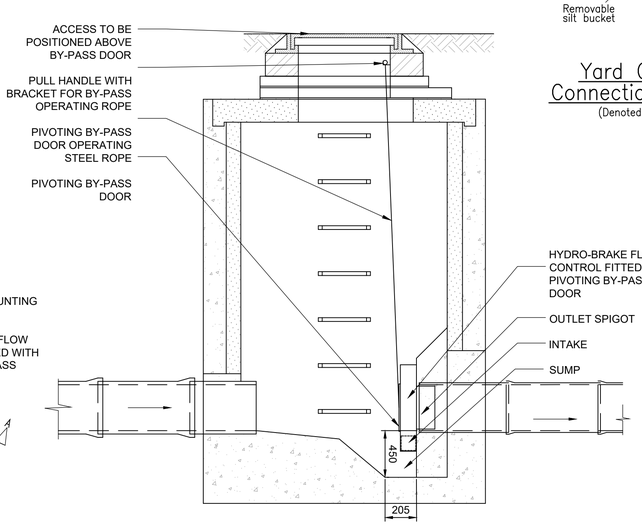

TYPICAL HYDROBRAKE CHAMBER

SCALE 1:20

SECTION

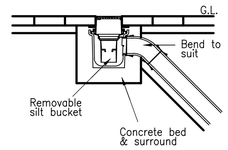

Yard Gully Connection Detail

(Denoted YG)

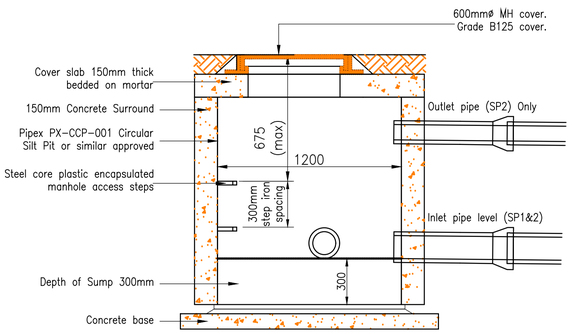

Silt Pit Detail

Scale 1:20

Section (Typ).

(Alternatively use proprietary Polypipe Catchpit or similar approved

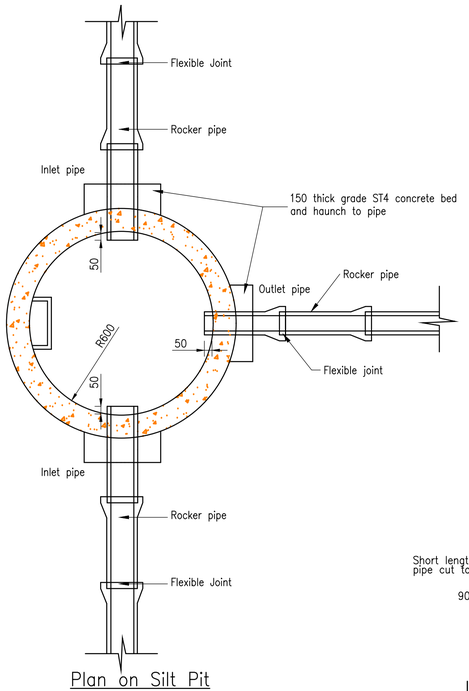

Plan on Silt Pit

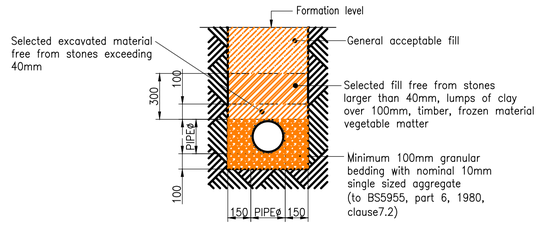

Pipe bedding detail Natural Ground

Scale 1:20

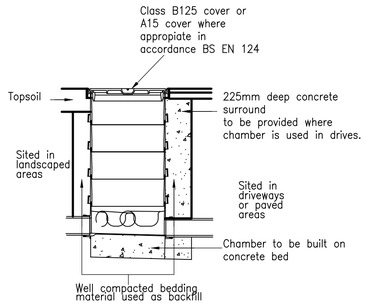

Polypropylene Inspection Chamber

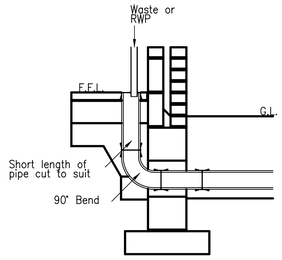

Internal Waste Pipe Connection Detail

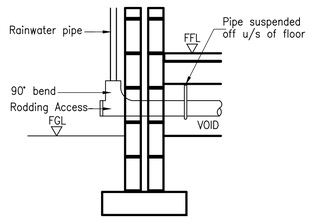

Horizontal Rodding Point

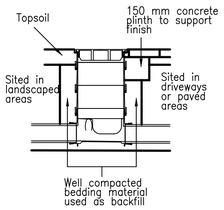

Access Fitting Chamber Detail

SAFETY, HEALTH AND ENVIRONMENTAL (SHE) INFORMATION

In addition to hazard/risk normally associated with the types of work detailed on this drawing, refer to drawing D001

Rev	Date	Description	By	Chk	App
A	11.03.22	CONSTRUCTION ISSUE	MAC	ATH	ATH
P1	04.12.2020	1st issue	MAC	ATH	ATH

Revision

Krypton Structure.
64 Victoria Road, Keighley BD21 1JB
Tel: 01535 509014 / 07342138129
Email: info@kryptonstructure.com
Visit: www.kryptonstructure.com

PROJECT
Ashton Old Road, Manchester M11 2NA
Manchester, M11 2NA

TITLE
Drainage Details

SCALE	DRAWING SIZE	DRAWN
As Shwon @ A1	A1	MAC

DRAWING No. 22140/D02 REV. A