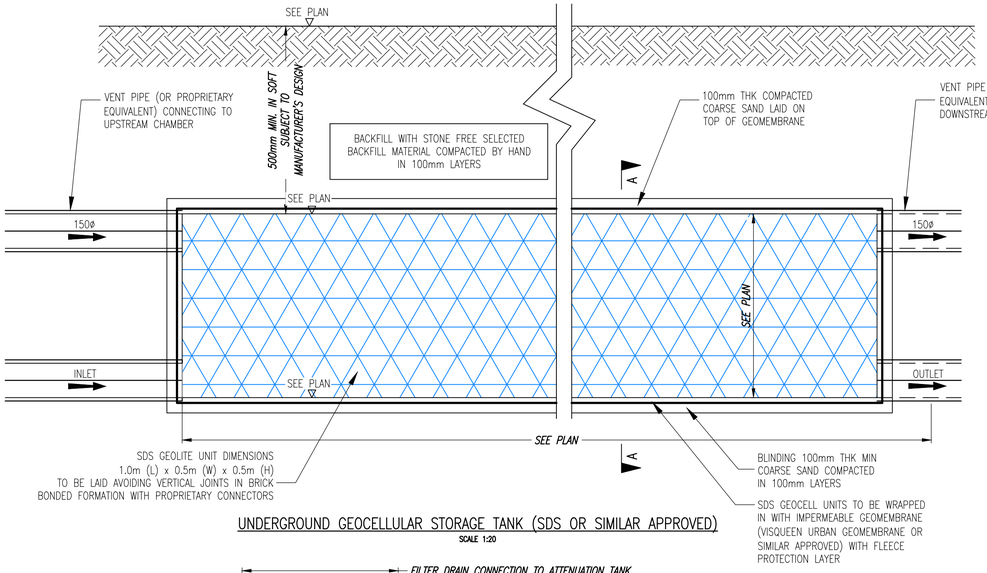

UNDERGROUND GEOCELLULAR STORAGE TANK (SDS OR SIMILAR APPROVED)

SCALE 1:20

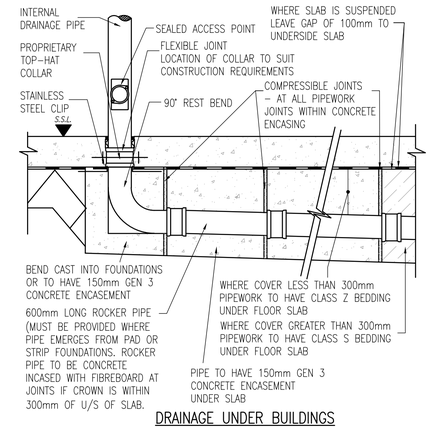

DRAINAGE UNDER BUILDINGS

(SCALE 1:20)

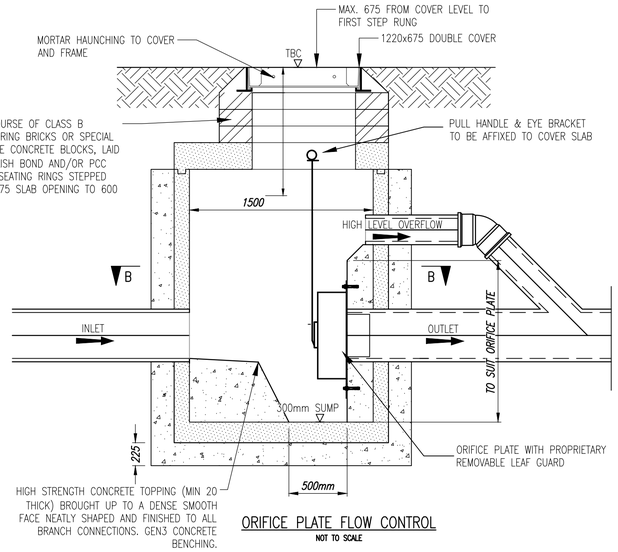

ORIFICE PLATE FLOW CONTROL

NOT TO SCALE

NOTES

1. ALL PROPRIETARY PRODUCTS TO BE INSTALLED IN ACCORDANCE WITH MANUFACTURER'S INSTRUCTIONS.
2. CONTRACTOR TO CONFIRM ALL EXISTING SERVICES HAVE BEEN DIVERTED.
3. CONTRACTOR TO CONFIRM FOUL AND SURFACE WATER LEVEL OUTFALL LOCATION AND INVERT LEVEL PRIOR TO COMMENCEMENT.

ATTENUATION TANK GENERAL NOTES

1. ATTENUATION TANK INSTALLATION AND BACKFILL - REFER TO MANUFACTURERS SPECIFICATION AND GUIDELINES.

2. WHEN BACKFILLING GEOCELLULAR TANK INSTALLATIONS: MACHINES PLACING THE MATERIAL MUST BE LOCATED OFF THE UNITS. BACKFILL - FIRST LAYER SHOULD BE 300mm THICK BEFORE USING ANY COMPACTION PLANT. NO VIBRATORY MECHANISM SHOULD BE USED FOR COMPACTING THIS FIRST LAYER. COMPACTION PLANT MUST NOT EXCEED 2300KG PER METRE WIDTH

3. VEHICLES AND CONSTRUCTION PLANT/VEHICLES MUST NOT TRAVERSE OVER THE TANK.

4. CONSTRUCTION PLANT AND MATERIALS MUST BE PLACED/STORED AT LEAST 1m CLEAR FROM THE EDGE OF THE TANK

5. FOR THE DURATION OF THE CONTRACT THE TANK IS TO BE PROTECTED BY TEMPORARY FENCING.

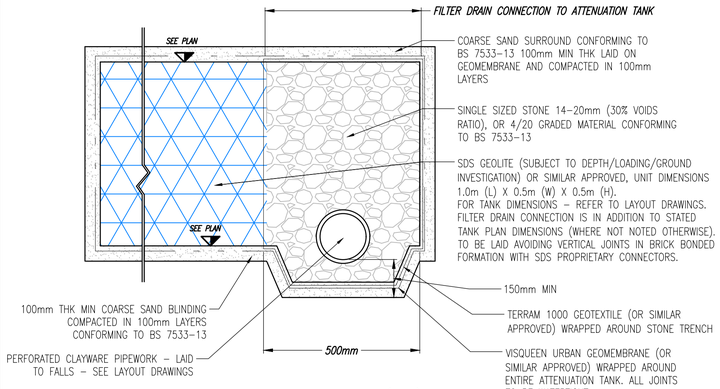

TYPICAL SECTION (A–A) THROUGH ATTENUATION TANK

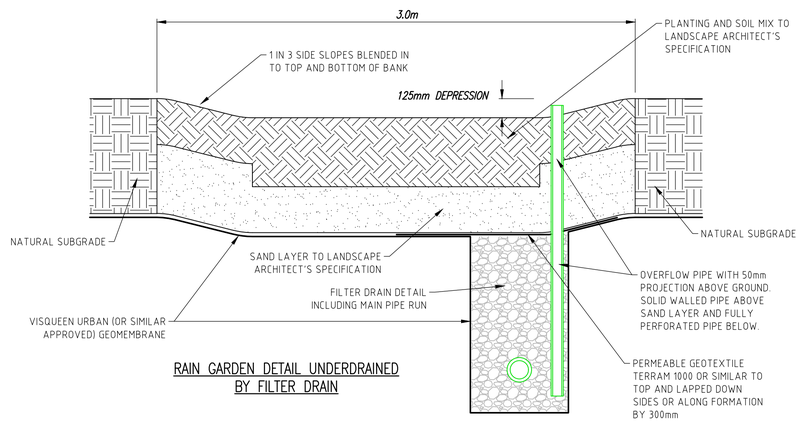

RAIN GARDEN DETAIL UNDERDRAINED BY FILTER DRAIN

FILTER DRAIN PIPE BEDDING DETAIL
PERMEABLE GRANULAR BED AND SURROUND

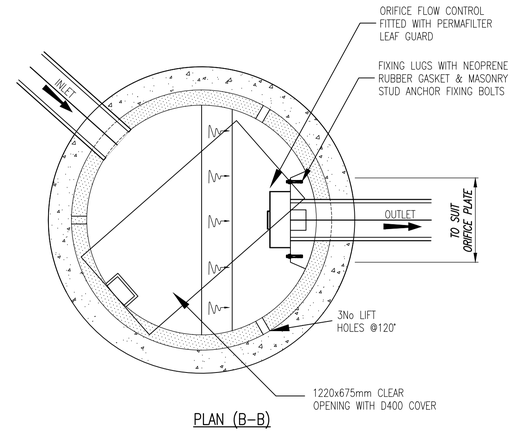

PLAN (B–B)

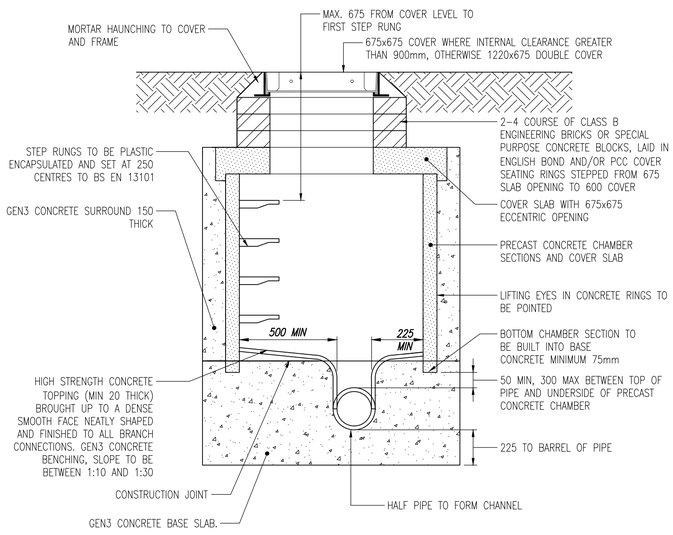

TYPE 2 MANHOLE DETAIL

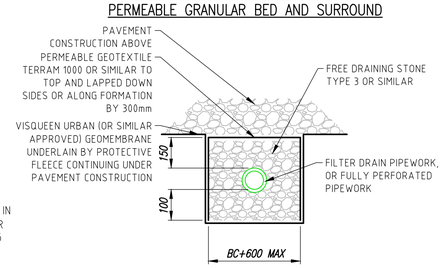

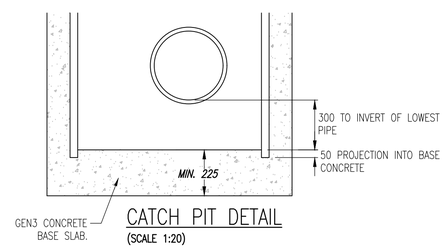

CATCH PIT DETAIL

(SCALE 1:20)

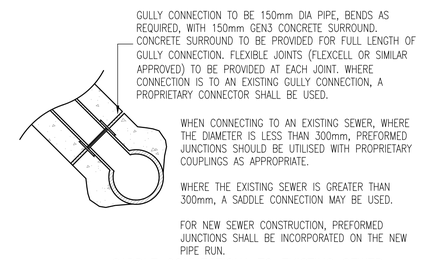

SADDLE CONNECTIONA TO EXISTING SEWER

(SCALE 1:20)

TYPICAL BRICKWORK/PCC MANHOLE DETAIL

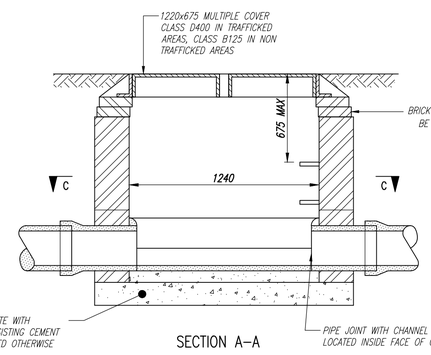

SECTION A–A

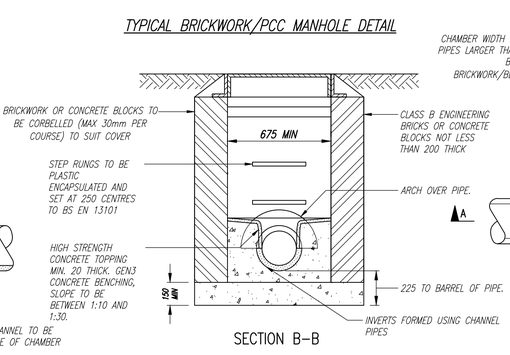

SECTION B–B

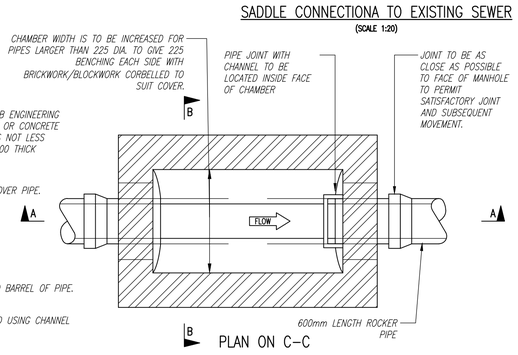

PLAN ON C–C

Rev.	Revision Detail	Drawn	Date
02	Flow control detail revised	MU	07/06/21
01	Rain garden detail added	MU	06/05/21

Based upon Ordnance Survey Mapping with permission of controller of HMSO. Crown copyright license no. 100045347. This drawing must not be copied or reproduced without written consent from Key GeoSolutions Ltd.

CLIENT:

DarwinGroup
Construction Has Evolved

PROJECT:

CONNELL CO-OP COLLEGE

TITLE:

PRELIMINARY DRAINAGE DETAILS SHEET 2 OF 2

Drawn:	Checked:	Date:
MU	MU	Dec ' 20
Scale: AS SHOWN	Original Sheet Size: A1	Status: Planning

Drawing No. 20-315-DR004 Revision: 02

KEY GS
Key GeoSolutions Ltd
Nova House
Audley Avenue
Newport
Shropshire TF10 7DW
Tel: 01952 822960
E-mail: info@keygs.com
Web: www.keygs.com