purified air®
since 1984

Electrostatic Precipitation (ESP) Filter Unit

Technical and Operations Manual

For Models: ESP 1500EI
ESP 3000EI
ESP 4500EI
ESP 6000EI

Using this Manual

This manual is intended to be used as a work of reference for professional, well trained and authorised users to assist them to safely install, use, maintain and repair the Unit mentioned on the cover of this document.

Please note that it is strongly recommended training be given by Purified Air Limited prior to operatives attempting to carry out maintenance or repair work on these Units.

Copyright Statement

All rights reserved

No part of this publication may be copied or published by means of printing, photocopying, microfilm or otherwise without prior written consent of the manufacturer. This restriction also applies to the corresponding drawings and diagrams.

The information given in this manual has been collected for the general convenience of our clients. It has been based on general data pertaining to construction material properties and working methods known to us at the time of issue of the document and is therefore subject at any time to change or amendment and the right to change or amend is hereby expressly reserved. The instructions in this publication only serve as a guideline for installation, use, maintenance and repair of the models mentioned on the cover page of this document.

This manual is to be used for the standard models of the Unit of the types given on the cover page. Thus the manufacturer cannot be held responsible for any damage resulting from the application of this manual to the version actually delivered to you.

This manual has been written with great care. However, the manufacturer cannot be held responsible, either for any errors occurring in this manual or their consequences.

Contents

1. Safety 1
1.1 Introduction 1
1.2 Safety Warnings and Instructions 1
1.3 Pictograms, Warnings and Instructions Displayed on the Unit 2
1.4 Safety Features 3
1.5 Safety Warnings and Cautions 3
1.6 Modifications 5
1.7 Users 5
1.8 Technical Specifications 5

2. Product Overview 7
2.1 Intended Use 7
2.2 Features 8
2.3 Operating Principles 8
2.4 Electrostatic Precipitator Unit - Components 10

3. Storage, Unpacking and Handling 12
3.1 Storage 12
3.2 Shipping List 12
3.3 Unpacking and Handling 12

4. Installation Guidance 13
4.1 Overview 13
4.2 Model Dimensions 13
4.3 Pressure Loss Graphs 15
4.4 Installing Single Units 17
4.5 Installing Multiple Units 18
4.6 Changing Airflow Direction / Re-Handing Unit 19
4.7 Connecting the Unit to a Building Management System 21

5. Operation and Control 22
5.1 Control Panel 22
5.2 Before Use 22
5.3 Switching On 23
5.4 Arcing and Auto-Shutdown 23
5.5 Switching Off 23

6. Fitting Stainless Steel Ioniser Blades 24
6.1 Fitting Stainless Steel Ioniser Blades to a Collector Cell 24

7. Maintenance and Cleaning 26
7.1 Introduction 26
7.2 Maintenance and Cleaning Schedule 26
7.3 Cleaning and Maintenance Tasks 27
7.4 Servicing 29

8. Troubleshooting 30

9. Spare Parts List and Components Illustration 31
9.1 Spare Parts Ordering 32

10. Wiring Diagram 33

11. Equipment Disposal 34
11.1 Packaging Material Disposal 34
11.2 Used Unit Disposal 34

12. Contact Details 35
12.1 Nationwide Coverage 35
12.2 Service and Maintenance Contracts 35
12.3 Dependability 35
12.4 Global Sales 35

13. Warranty Statement 36

14. Certification 37
14.1 EC Declaration of Conformity 37

1. Safety

1.1 Introduction

Everyone working on or with the Unit must be familiar with the contents of this manual and must strictly observe the instructions herein.

The Management should instruct personnel in accordance with this manual and observe all instructions and directions given herein.

Note: Always follow the steps for any instructions in this manual in the order given.

Always keep this manual with the Unit.

The user of the Unit is always fully responsible for observing all applicable local safety instructions and regulations.

Specific working conditions or selected accessories may require additional safety instructions. Contact your supplier immediately if you detect a potential danger when using the Unit.

1.2 Safety Warnings and Instructions

The following symbols and notifications are used in this manual:

WARNING!

Used to warn of a risk of injury or death.

WARNING! - DANGER OF ELECTRIC SHOCK!

Used to warn of a risk of injury or death from electric shock.

CAUTION

Used to caution of a risk of damage to equipment.

INFORMATION

Important information or useful hints about usage.

RECYCLING

Recycling information.

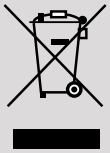

WEEE REGULATIONS

Ensure that waste electrical equipment is disposed of correctly.

1.3 Pictograms, Warnings and Instructions Displayed on the Unit

The pictograms, warning and instructions attached to the Unit are part of the safety features.

They must not be covered or removed and must be present and legible during the entire life of the Unit.

- Immediately replace or repair damaged or illegible pictograms, warnings and instructions.

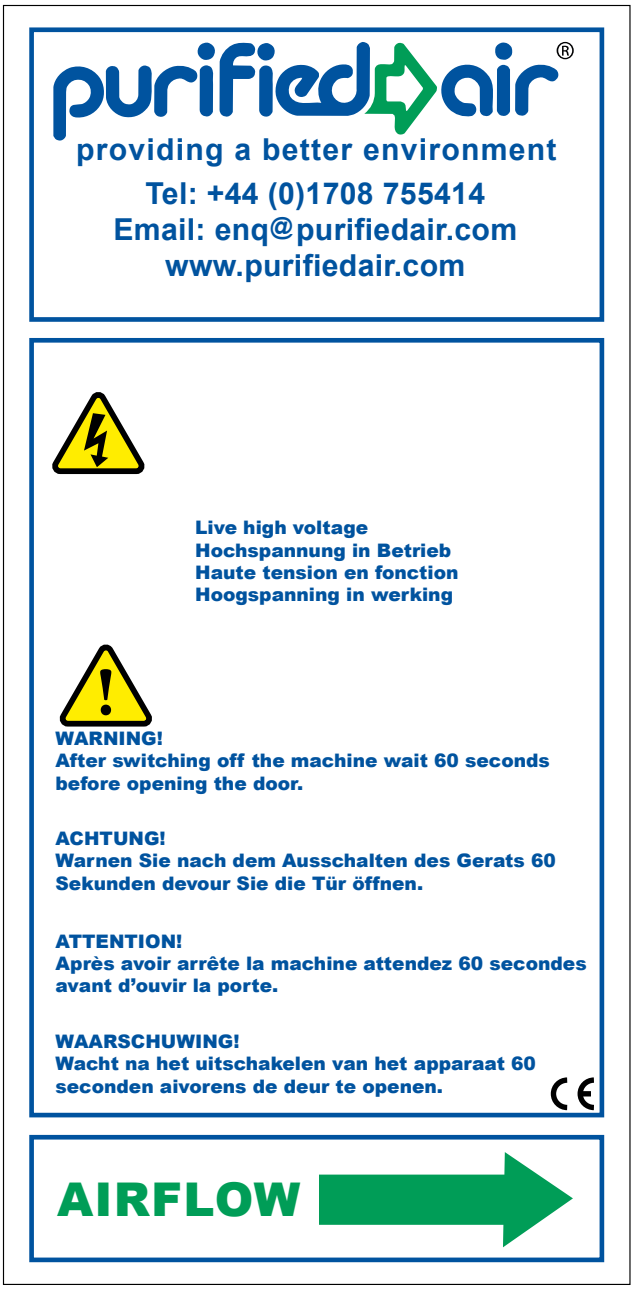

Figure 1 - Unit Label

1.4 Safety Features

An Interlock in the Unit's Door Assembly interrupts the mains power if the main filter compartment is opened before the mains power has been isolated.

CAUTION

All safety features must be correctly installed and can only be removed for maintenance and repair tasks by skilled and authorised service engineers.

The Unit must not be used if the safety features are not fully present or defective.

The safety features should be regularly checked to ensure that they are functioning correctly and, if defective, should be repaired immediately.

1.5 Safety Warnings and Cautions

WARNING! RISK OF EXPLOSION!

The Unit is not explosion-proof rated. It can cause sparks and should therefore not be used in areas with an explosion risk.

WARNING! Fire Hazard!

Never use the Unit for extracting and/or filtering inflammable, glowing or burning particles or solids or liquids.

Never use the Unit for extracting and/or filtering of aggressive fumes (such as hydrochloric acid) or sharp particles.

WARNING!

Ozone (O_3) is produced by the Unit. Ozone can be poisonous at low concentrations.

Inhalation of ozone causes dryness of the mouth, coughing and irritates the nose, throat, and chest.

It may cause difficulty in breathing, headaches and fatigue, and could aggravate existing bronchial conditions including asthma. The characteristic sharp, irritating odour is readily detectable at low concentrations (0.01 to 0.05 ppm).

The Unit must not be operated without the kitchen's extractor fan(s) running.

WARNING! - DANGER OF ELECTRIC SHOCK!

To avoid electric shock:

Do not operate Unit without a proper electrical ground/earth.

Always disconnect power to the Unit and isolate the Unit, before performing any service or maintenance.

Do not operate the Unit if its power cables are damaged or if any other damage to the Unit is visible or suspected.

The supplied utility/mains power must match the power requirements listed on the Unit's rating label.

CAUTION

Regularly inspect the Unit and check it for damage.

Verify the correct functioning of all of the safety features.

Read and save all notices, warnings and safety instructions received with this Unit.

Do not alter the construction or design of this Unit.

Do not remove safety labels or devices.

Do not use this equipment for other than its intended purpose, as described in this manual.

Only use original spare parts.

CAUTION

Make sure the room is always sufficiently ventilated, particularly in smaller, confined areas.

Do not use the Unit at a relative humidity exceeding 75%.

Do not use the Unit at temperatures below -10°C or above 60°C.

Keep the operating controls free from dirt and grease.

Check the working environment. Do not allow unauthorised persons to enter the working environment.

Use common sense. Stay alert and pay attention to your work. Do not use the Unit when you are tired or under the influence of drugs, alcohol or medicine.

1.6 Modifications

Modification of the Unit is not permitted.

1.7 Users

Installation or maintenance of the Unit is exclusively reserved for authorised, trained and qualified users.

Temporary personnel and trainees should only access the Unit under the supervision and responsibility of the authorised, trained and qualified users.

1.8 Technical Specifications

There are currently four models in the range:

- ESP 1500EI, which contains a single ESP Collector Cell.
- ESP 3000EI, which contains two ESP Collector Cells.
- ESP 4500EI, which contains three ESP Collector Cells.
- ESP 6000EI, which contains four ESP Collector Cells.

The specification of each model is detailed below:

	ESP 1500EI	**ESP 3000EI**	**ESP 4500EI**	**ESP 6000EI**
Power consumption	20 Watts	30 Watts	40 Watts	50 Watts
Maximum air handling capacity	Up to 0.7m^3/sec	Up to 1.4m^3/sec	Up to 2.1m^3/sec	Up to 2.8m^3/sec
Dimensions	W 450mm H 630mm D 640mm	W 900mm H 630mm D 640mm	W 1350mm H 630mm D 640mm	W 1800mm H 630mm D 640mm
Weight	55kg	85kg	118kg	153kg
Power supply	220/240V 50Hz 1ph	220/240V 50Hz 1ph	220/240V 50Hz 1ph	220/240V 50Hz 1ph
Filter efficiency	Up to 98%	Up to 98%	Up to 98%	Up to 98%
Housing	Epoxy-coated galvanised steel	Epoxy-coated galvanised steel	Epoxy-coated galvanised steel	Epoxy-coated galvanised steel

1.8.1 Rating Plates

Figure 2 - Rating Plates for Each Model

2. Product Overview

2.1 Intended Use

The Electrostatic Precipitator (ESP) models covered by this manual have been designed primarily for filtering the extract air from commercial kitchens and have various specific features to suit that purpose.

Note: Though they can also be used for air filtration in other commercial and industrial applications where a high degree of filtration is needed, before considering alternative uses, please check with the manufacturer to confirm that your Unit will be suitable for its intended use.

CAUTION

No liability is accepted for damage or injury which results from any alternative use which has not been verified in writing by the manufacturer.

Using the Unit for alternative uses not approved in writing by the manufacturer is considered contrary to its intended use.

The Unit has been built in accordance with state-of-the-art standards and recognised safety regulations.

Individual Units can be mounted together in various combinations to satisfy the requirements of a particular installation.

CAUTION

Only use the Unit:

If it is not damaged in any way.

After following the instructions laid down in this manual.

Figure 3 - ESP Filter Unit (Model ESP 4500EI)

2.2 Features

The following features are applicable to all four models covered by this manual:

- They can be installed outside without an additional weather housing.

  The Unit's casings is fully weatherproofed, with the Main Door components having an IP Rating of 64 and the Door Assemblies themselves being tightly sealed to the main chassis.
- The ionisation voltage runs at a negative potential which enhances both the ionisation of particles and their consequent precipitation and the production of ozone which helps eliminate odours in a kitchen environment.
- A high degree of efficiency, with power consumption between 20 Watts and 50 Watts, depending on the model.
- The Unit can be linked to a Building Management System (BMS) via a suitable relay mounted on the DIN rail (See: *Connecting the Unit to a Building Management System on page 21*).
- All internal components are designed for easy removal.
- The Mesh Filters (Pre and Post) are designed to drain independently and the Collector Cell is designed to be efficient, robust and effective.
- The Collector Cells and Filter Carriers can be easily removed for cleaning.
- The Collector Cells can be fitted with ionisation wires or with stainless steel spiked ioniser blades.
- All internal surfaces are as smooth and as free from screw and rivet heads as practically possible to allow for ease of cleaning.
- Fully welded sumps prevent leakage of collected grease. The inward sloping edges of the sumps encourage the flow of grease away from both the ducting and either side of the Unit.
- The Door Assemblies are designed to allow the Unit to be quickly reconfigured for different airflow directions.

2.3 Operating Principles

Commercial kitchen exhaust pollution is composed of two distinct phases:

- The particulate phase; oil, smoke and grease particles.
- The gaseous or odour phase.

2.3.1 Oil, Smoke and Grease Filtration

The primary function of Purified Air's range of Electrostatic Precipitators (ESPs) is to effectively filter the particulate phase (oil, smoke and grease) of extracted kitchen fumes.

The Unit covered by this manual utilises an ionisation process to filter particulates in the exhaust down to a sub-micron level, with an efficiency of up to 98% when fitted correctly.

The ESP Filters have been exclusively designed for filtering extracted kitchen fumes and have integral sumps built in to collect the oil and grease particles. This not only simplifies servicing but eradicates potentially dangerous spillage from the bottom of the Unit.

The entire range fits in-line with the kitchen's ducting and the modular layout allows additional Units to be easily added to cope with all kitchen fume extraction requirements.

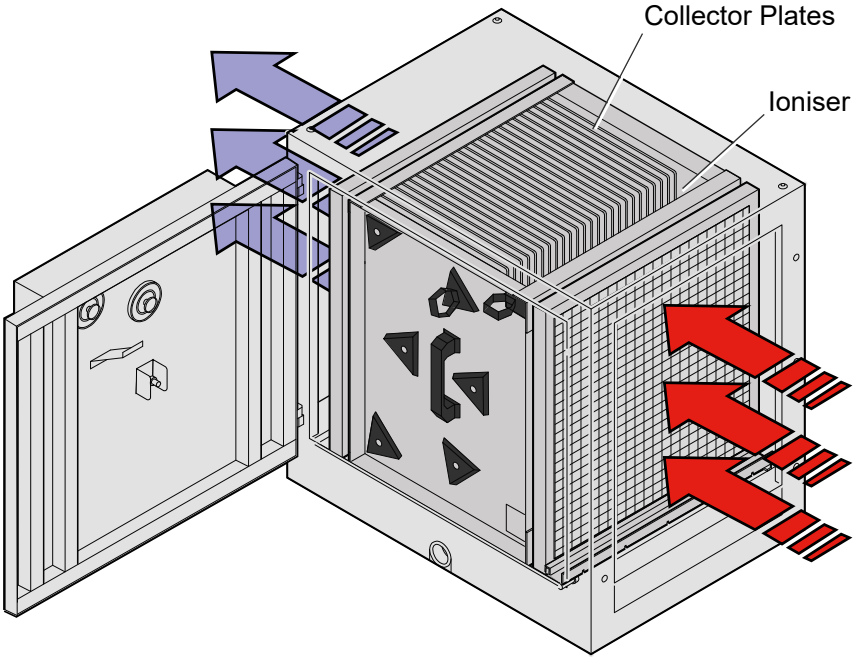

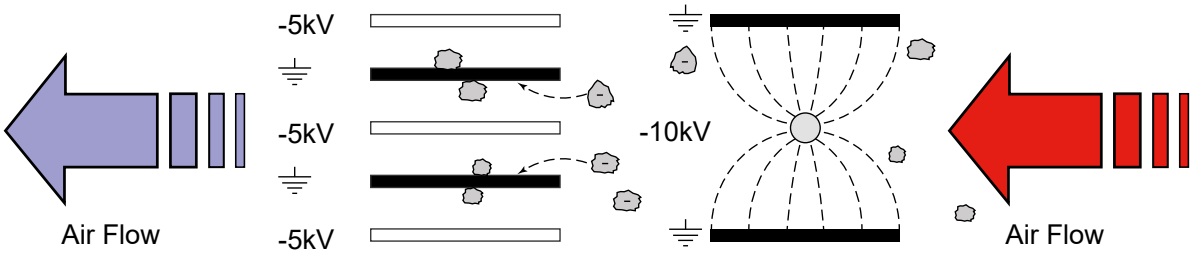

Figure 4 - Electrostatic Precipitator (ESP) - Operating Principles

Figure 4 (above) shows, in simple terms, how an electrostatic precipitator functions and this is summarised below:

1. The air first passes through a pre-filter.
2. The air then passes into the combined Collector Cell/Ioniser section where the particulates in the air stream are charged to a negative potential.
3. The negatively ionised air then passes between the Collector Cell's plates, which are alternatively negatively charged or earthed.
4. The negatively charged particulates passing through the plates are then simultaneously repelled away from the negatively charged plates and attracted to the earthed plates, where they stick, effectively filtering them from the airflow.
5. The particulates remain on the plates or drain down in to the sump (hence the need for regular cleaning).
6. The cleaned air exits through a post filter.

2.3.2 Odour Control

Ozone is produced as a function of the charging of the Collector Cell's plates in Purified Air's range of Electrostatic Precipitators. This helps to combat the gaseous or odour phase of kitchen exhaust pollution.

However, for total control of the gaseous phase, Purified Air also manufactures and distributes a range of Ultra Violet equipment and Ozone Generators as well as our Odour Neutraliser, the ON100.

Note: We also supply a full range of passive filtration equipment, including Activated Carbon, Baffle, Mesh, HEPA, Bag and Panel filters.

2.4 Electrostatic Precipitator Unit - Components

All models of Electrostatic Preciptator Unit comprise a Main Chassis with a number of removable components, a Main Door and an Electrical Housing Door.

2.4.1 Main Chassis

The Main Chassis contains the removable Collector Cell, Filter Carrier, Pre and Post Mesh Filters and non-removable, fully welded, Sump with Drain Plug.

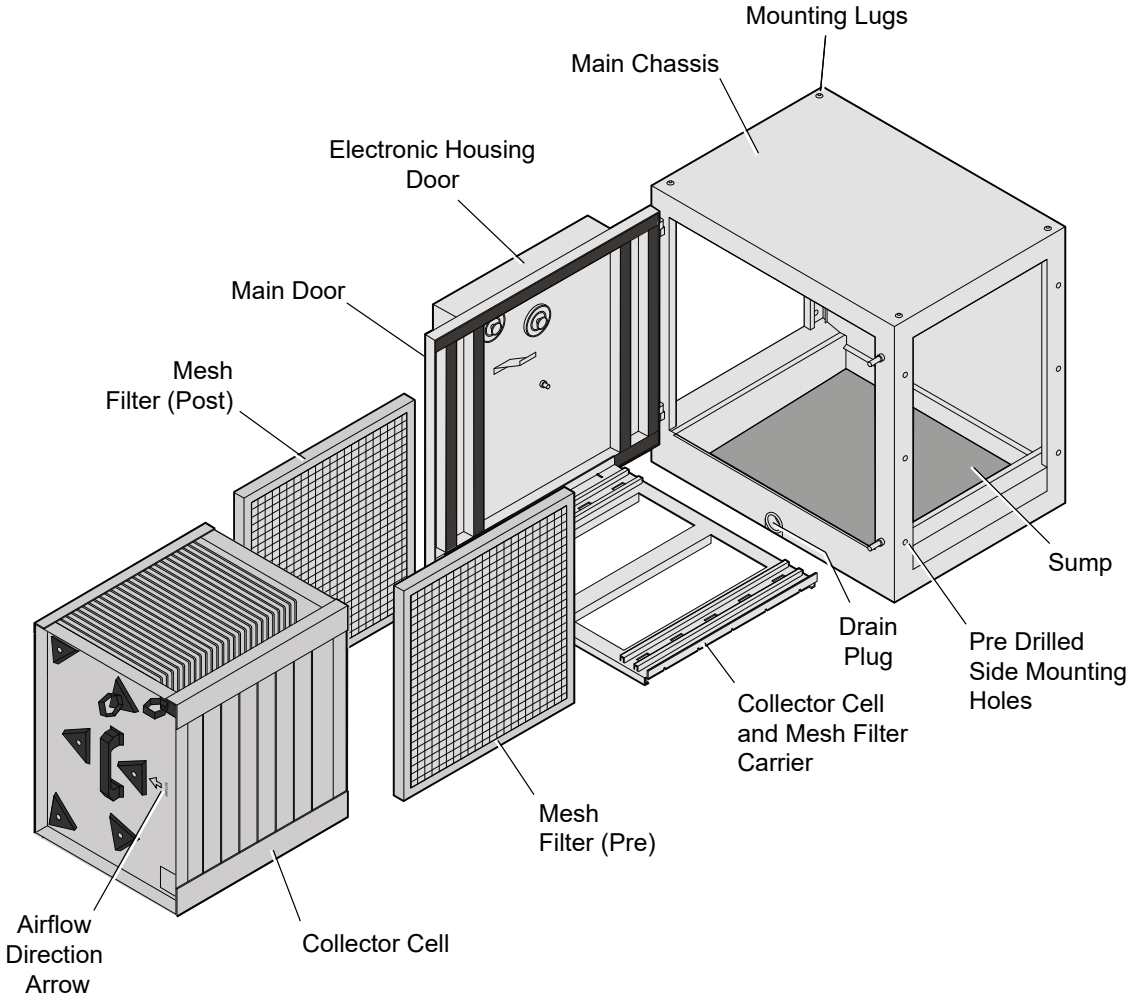

Figure 5 - Electrostatic Precipitator Unit - Main Chassis Components

2.4.2 Main and Electrical Housing Door Assemblies

The Main Door has an Electrical Housing Door which contains the High Voltage Power Supply (HVPS) and control elements. On the front of the Electrical Housing Door are mounted the Rotary Mains Isolator Switch and green Run Light Indicator.

The Main Door can be hung either way up to allow the Unit to be handed for different airflow directions.

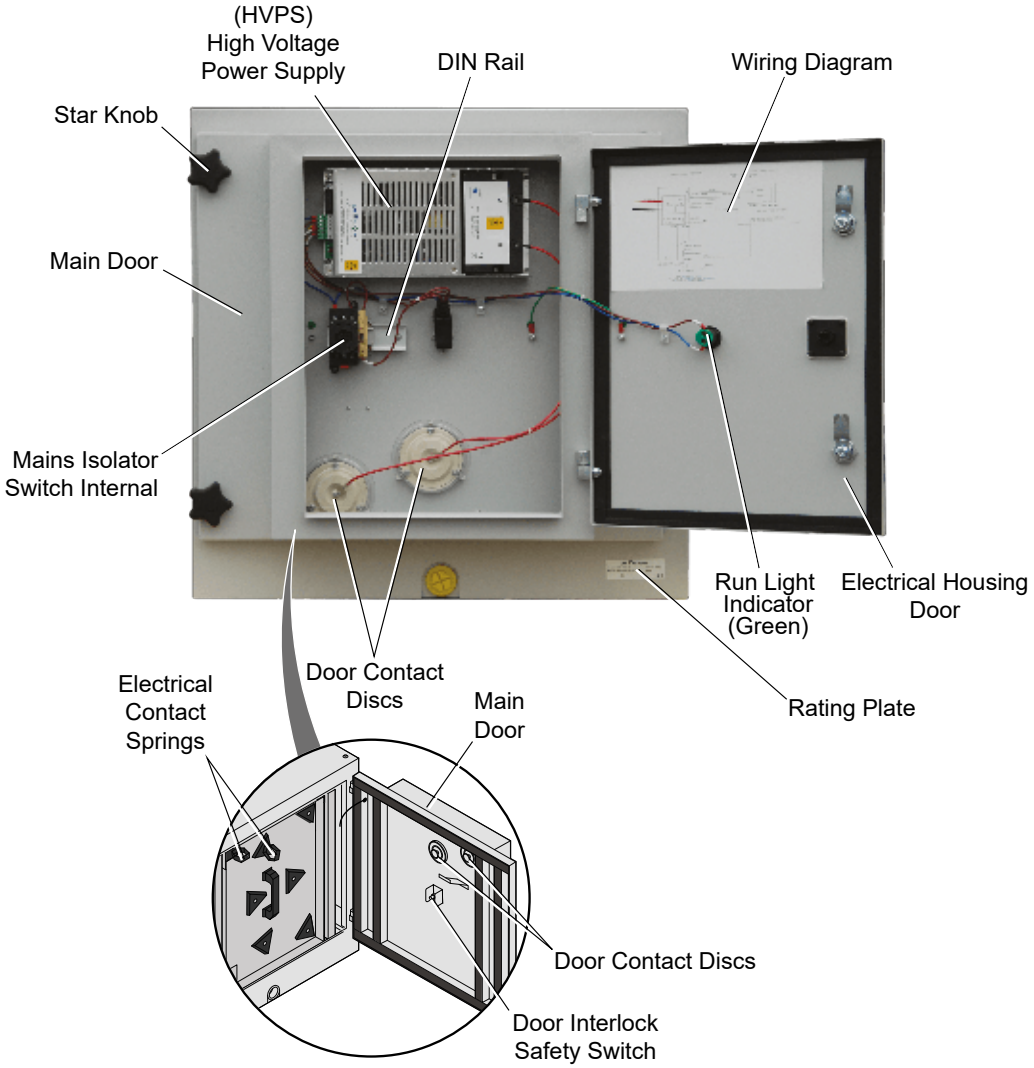

Figure 6 - Door Assemblies

3. Storage, Unpacking and Handling

3.1 Storage

Prior to installation, each ESP Filtration Unit must be stored in its original packaging in dry conditions.

3.2 Shipping List

Each Unit is shipped with the following:

- ESP Filter components - Mesh Filters and Collector Cells.
- This Technical and Operations Manual.

3.3 Unpacking and Handling

Before installing:

1. Strip away all packaging, wrapping and strapping (this must only be done by trained, professional installers).
2. Open the Unit and carefully remove all Mesh Filters and Collector Cells and place in a safe and secure position, away from the installation area.

   This operation will greatly reduce the weight of the Unit and allow much easier installation.
3. Once the Unit have been successfully installed, carefully replace the Mesh filters and Collector Cells, ready for commissioning.

WARNING!

The Unit is heavy and the appropriate lifting and handling practices must be observed, for both unpacking and installation, to avoid personal injury or damage to the equipment.

See the Technical Specifications for Unit weights.

4. Installation Guidance

4.1 Overview

Installation should be carried out by a trained professional installer.

As installations vary widely depending on the specific site requirements, this section only provides general guidance for the installer.

If in any doubt, contact Purified Air Limited.

4.2 Model Dimensions

The dimensions, and the necessary service space required at the front of the Unit, are detailed opposite for each model.

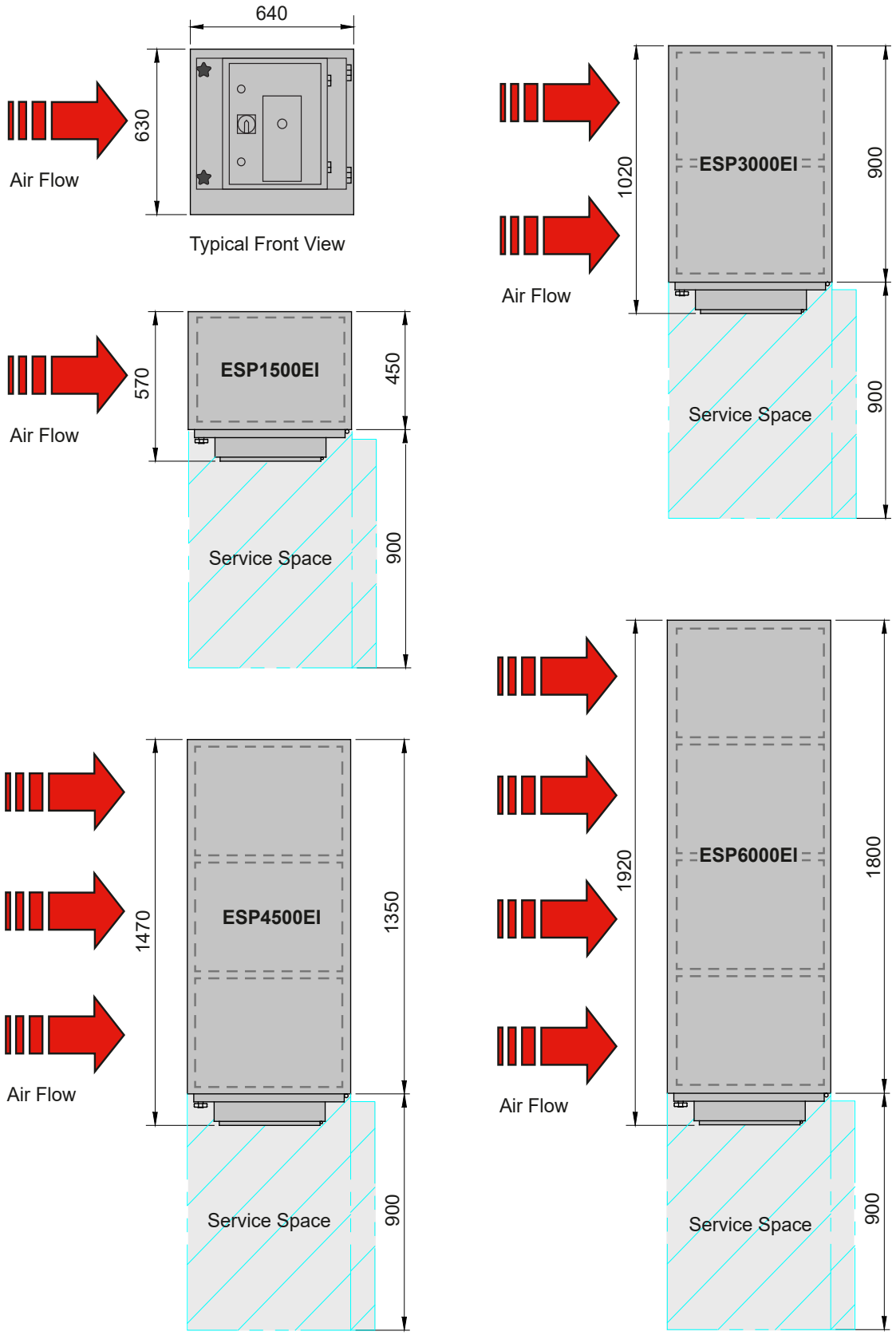

Figure 7 - Model Dimensions - ESP 1500EI, ESP 3000EI, ESP 4500EI and ESP 6000EI

(All Dimensions in Millimetres)

4.3 Pressure Loss Graphs

Any equipment added to a duct system will cause a drop in air pressure in the duct system, downstream of the added equipment.

To ensure that the duct system performs as expected, please note the Pressure Loss Graphs for each of the models:

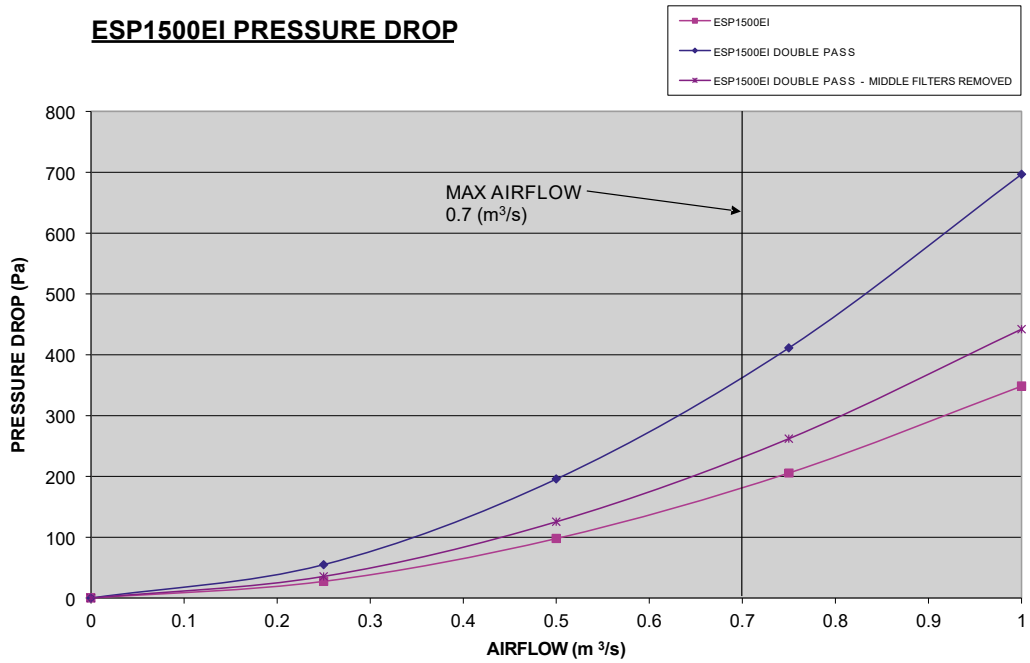

Figure 8 - Graph of ESP 1500EI Pressure Drop

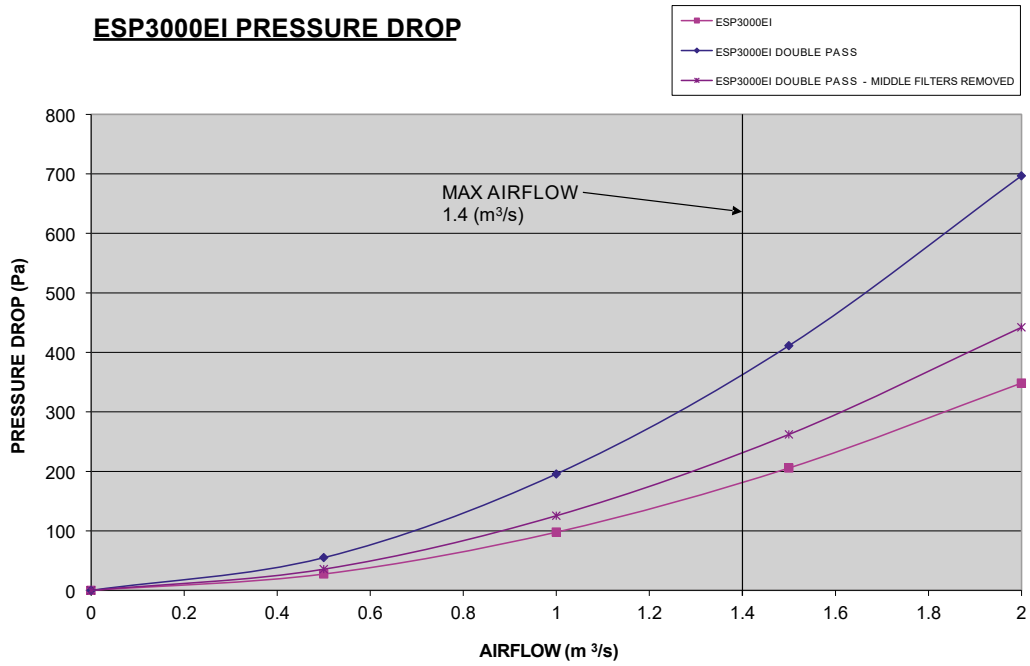

Figure 9 - Graph of ESP 3000EI Pressure Drop

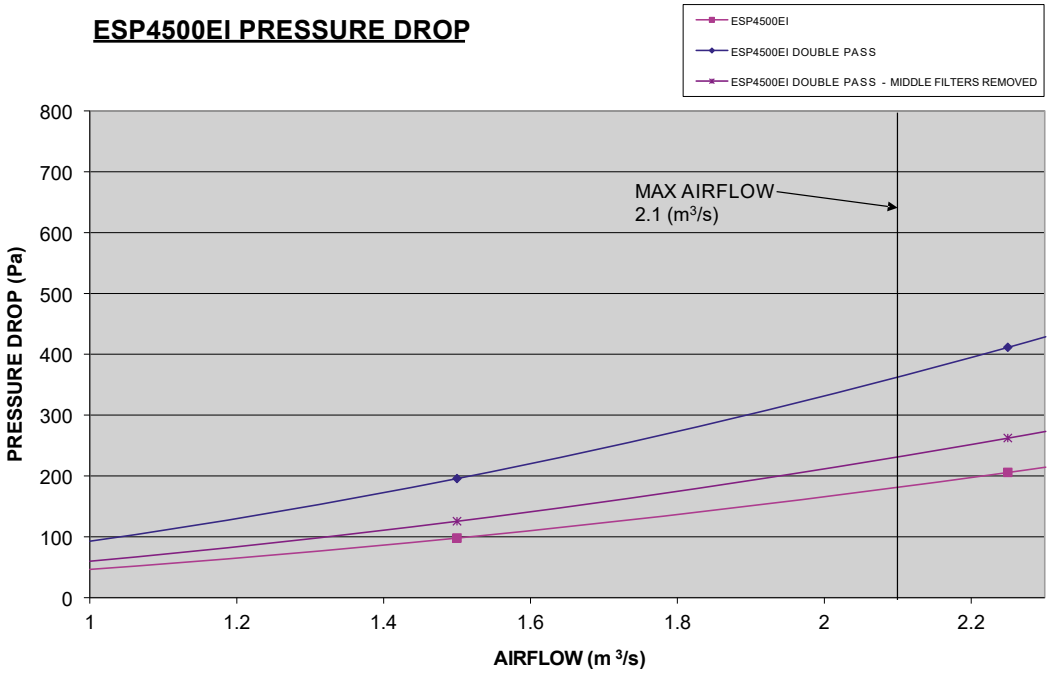

Figure 10 - Graph of ESP 4500EI Pressure Drop

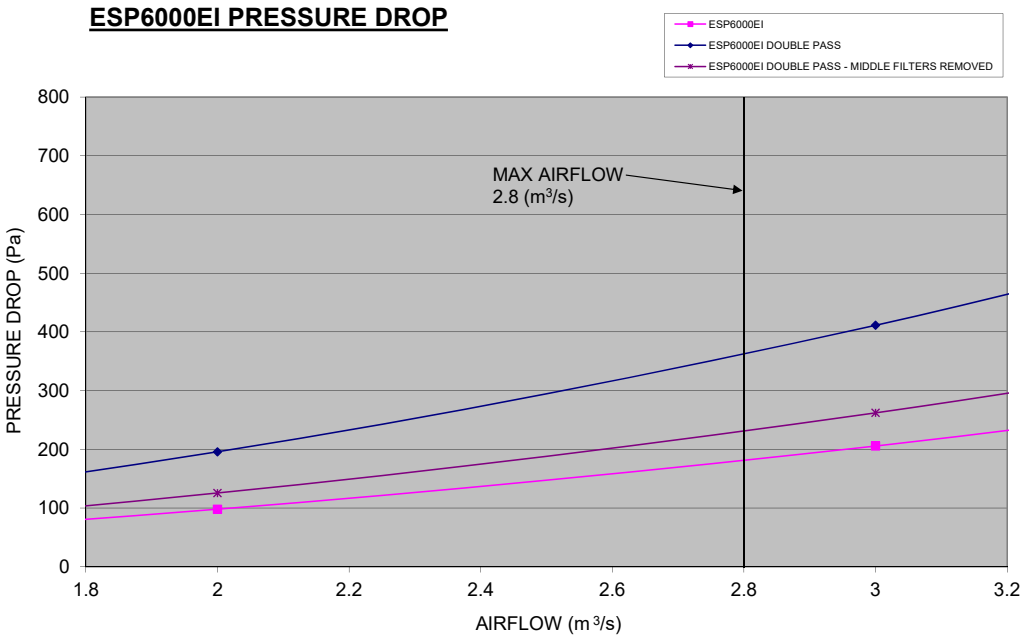

Figure 11 - Graph of ESP 6000EI Pressure Drop

4.4 Installing Single Units

When installing a single Unit, please note the following:

- The Unit should be positioned as close to the cooking source as possible, but please ensure that the fume temperature will never exceed the maximum operational temperature of the Unit, i.e. 60°C.
- Ensure that there is adequate service space around the Unit to enable the removal of the Unit's components.
- Ensure that there is adequate and safe access for servicing and maintaining the Unit.
- Check that the supporting structure is adequate for the weight of the Unit prior to installation. See Technical Specifications for Unit weights.
- The Unit should be mounted in the ducting system.
- The Unit can either be supported by a suspension bracket or suspended by screw rods attached to the top of the Unit. Suspension by screw rods will necessitate drilling holes in the top of the Unit's housing for this purpose.
- The Unit can also be placed on the ground, providing a suitable frame is placed in between the Unit and the floor to allow the system to be drained properly.

  We suggest that this frame has a minimum height of 150mm and that you use suitable rubber or neoprene insulation between the Unit and the frame.
- The ducting should be fabricated to ensure as straight and even an airflow as possible, prior to entry into the Unit.
  Turbulent air or air directed to one side of the Unit will make the Unit less efficient.

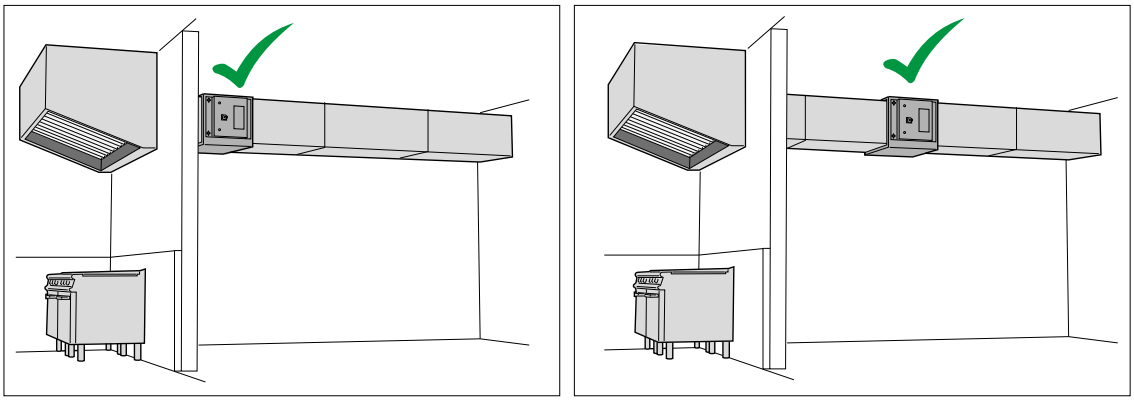

Figure 12 - Preferred Mounting of Filter Unit

Please consult the Wiring Diagram, mounted on the inside of the Door Assembly and shown on page 33 of this manual, when connecting the Unit to the mains. Beware of possible differences in the mains power supply.

INFORMATION

The ESP filter must be interfaced with the extraction fan so that they run in conjunction.

4.5 Installing Multiple Units

Multiple Units can be mounted in series, both vertically or horizontally or in parallel with each other.

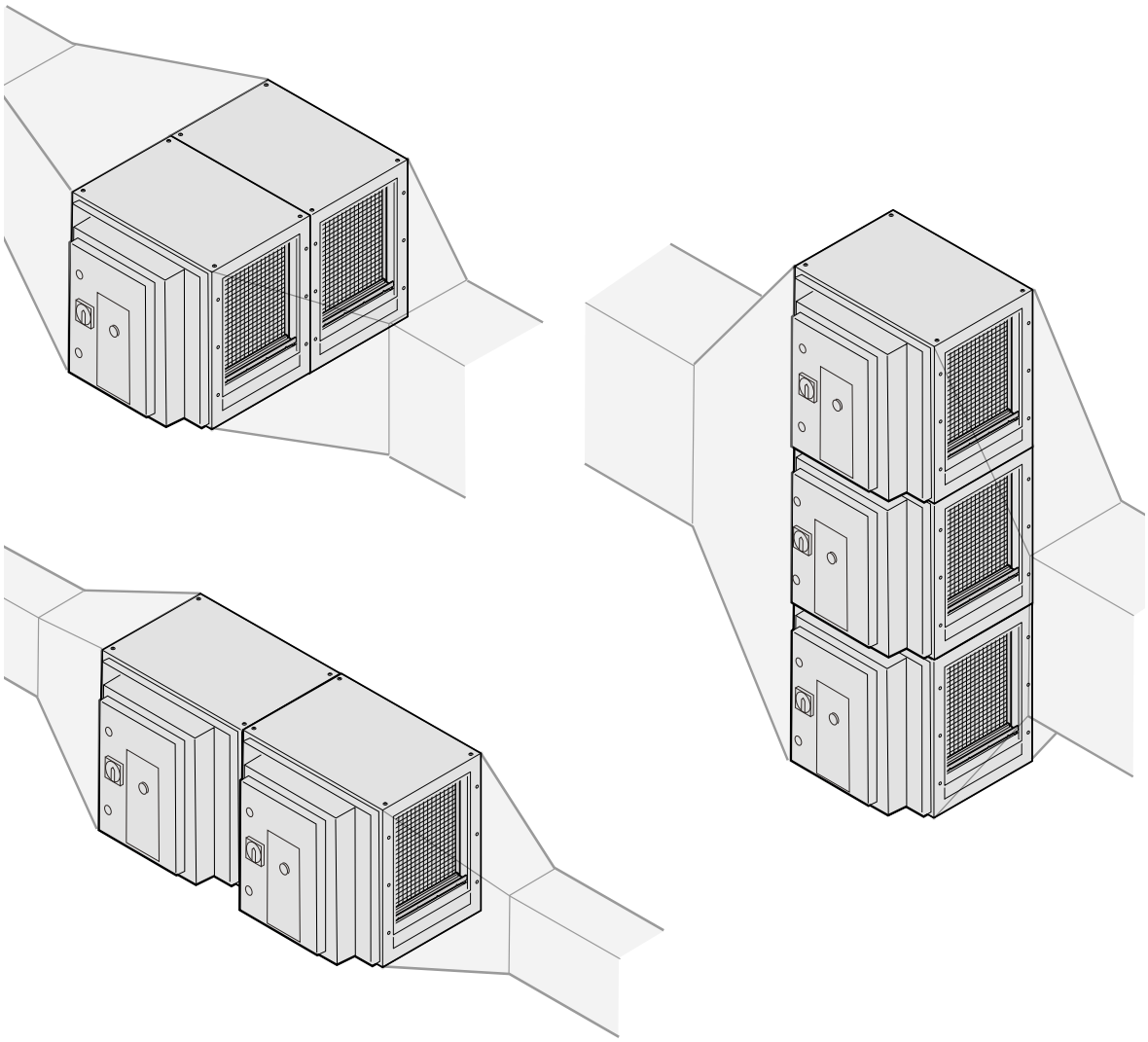

Figure 13 - Multiple Unit Installation Examples

When mounting multiple Units, please note the guidance for installing a single Unit and also note the following:

- The side flanges are pre-drilled to allow combinations of Units to be easy aligned and connected together.
- Locating lugs are also provided on the top of the Units to allow the vertical stacking and connection of combinations of Units. Up to four Units can be stacked on top of each other.

INFORMATION

Never install Units in front of entrances and exits which may be used by the emergency services.

4.6 Changing Airflow Direction / Re-Handing Unit

The ESP can be configured to allow airflow in either direction, i.e. air entering the Unit from the left or right hand side to take account of space constraints or the existing infrastructure.

The following tools will be required to change the airflow's direction:

- 7mm spanner or socket.
- Small adjustable spanner.
- 14 or 13mm socket depending on model.
- Cross head screwdriver.
- Pair of pliers.
- Optionally, a portable electric drill with a socket attachment.

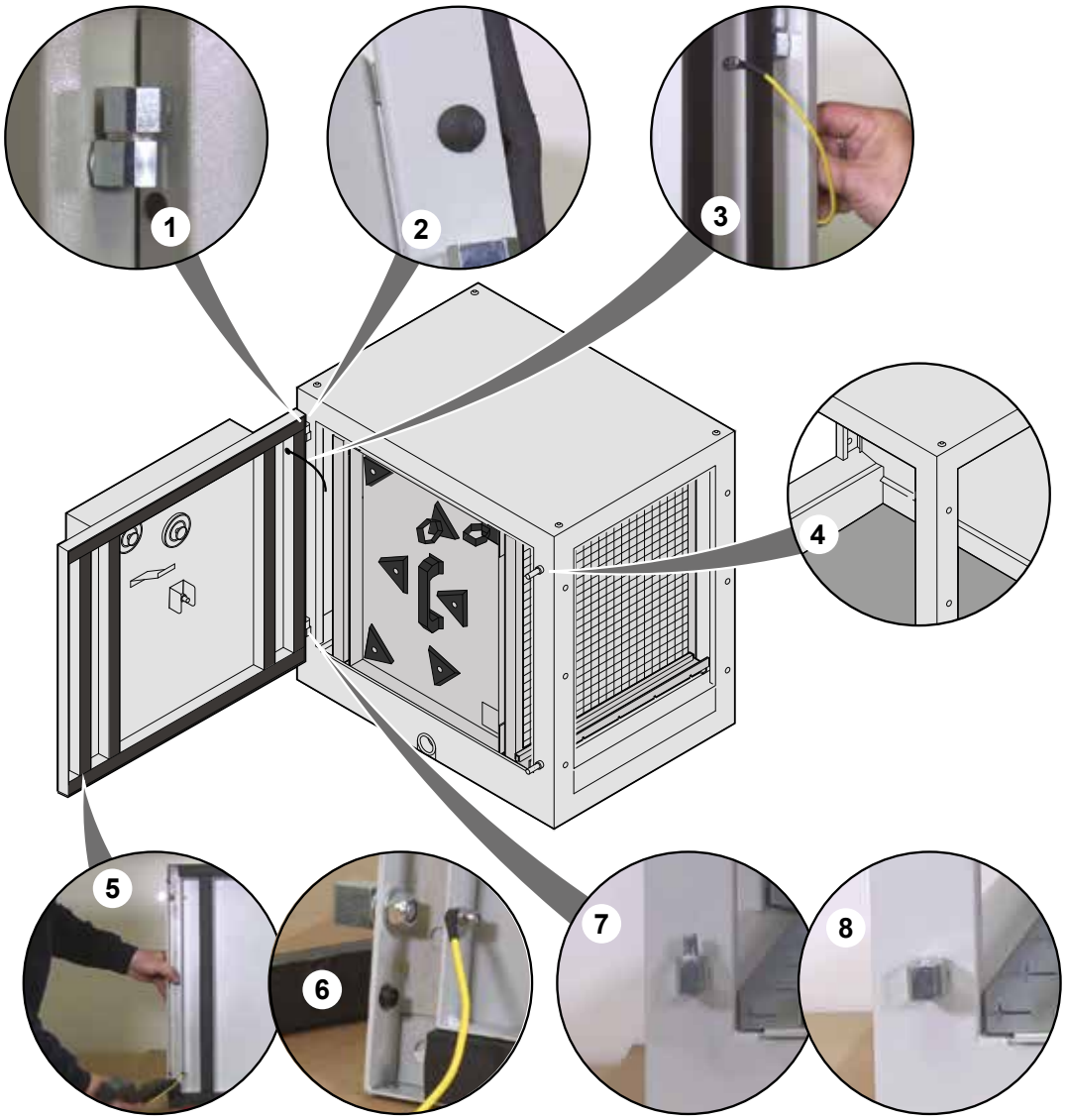

Figure 14 - Re-Handing Process Components

To change the airflow direction:

1. Fully undo the two Star Knobs ❹ (anti-clockwise) and open the Main Door.
2. Remove the Mesh Filters (pre and post), followed by the Collector Cell.
3. Remove the Earth Connection ❸ from the Main Chassis using a 7mm spanner.
4. Lift the Door Assembly off the Two Part Hinge ❶, taking care not to drop the hinge pins ❼ and washers.
5. Remove the hinge pins and washers and put somewhere safe.
6. Put the Door Assembly in a safe place.
7. Undo the Hinge Blocks ❽ using a combination of a 13/14mm socket and adjustable spanner and remove from the Main Chassis.
8. Remove the Threaded Rods ❹ that the Star Knobs were attached to, from the other side of the door aperture, using a deep 13/14mm socket or portable drill with the same attached.

INFORMATION

Note that the two sets of holes on either side of the door aperture are identical.

9. Install the Threaded Rods ❹ and Hinge Blocks ❽ on the opposite sides of the door aperture to their original locations, ensuring that the hinge pin location holes on the hinge blocks face upwards.
10. Turn the Door Assembly through 180° i.e. turn upside down.
11. Remove the Door Assembly Sealing Strip/Rubber Seal ❺.
12. Remove the Grommets ❷ from the holes near the Hinge Blocks ❻.
13. Remove the Hinge Blocks ❻ using a combination of an adjustable spanner and pliers.
14. Replace the Hinge Blocks ❻ into the holes previously occupied by the Grommets ❷, making sure that the hinge pin location holes on both hinge blocks point downwards.
15. Refit the Grommets ❷ into the holes left by the hinge blocks.
16. Relocate the Earth Connections ❸ to the top of the door's frame using either a screwdriver or pliers depending on the model.
17. Replace the Sealing Strip/Rubber Seal ❺.
18. Locate the Hinge Pins ❼ into the hinge pin location holes in the Hinge Blocks ❽ on the main body of the Unit.
19. Rehang the Door Assembly.
20. Re-attach the Earth Connection ❸ to the main body of the Unit.
21. Turn the Collector Cell through 180° (i.e. turn upside down to match the new orientation of the door) and replace in the Unit followed by the Mesh Filters (pre and post).
22. Ensure that the Collector Cell's spring electrical contacts line up with the electrical contact discs on the Door Assembly.

23. Remove the label from the door and replace with a new one in the correct orientation having first cleaned the door's surface.

    It will be easier to adjust the new label's location if the door's surface is first wiped over with a slightly wet cloth before the label is attached. Once the water has dried, the correctly located label can be smoothed down.

24. Re-orientate the Rotary Mains Isolator Switch by removing the centre fixing screw and the red cover. Turn the red cover through 180°, replace it on the square centre shaft and secure with the fixing screw.

25. Follow the instructions listed in Operation and Control on page 22 to test the correct functioning of the Unit.

INFORMATION

For additional information, please see the video showing how to change the airflow's direction on the Purified Air website:

www.purifiedair.com

4.7 Connecting the Unit to a Building Management System

The Unit can be connected to a Building Management System (BMS).

- In order to complete this connection, a BMS Connection Kit must be purchased as a separate item.
- Connect the BMS to the Unit using the relay provided on the DIN rail in the Door Assembly.
- Refer to the Wiring Diagram on page 33 for details on how to connect the Unit to a BMS.

INFORMATION

Note that the BMS connection will only provide a Run or Fault signal.

5. Operation and Control

5.1 Control Panel

The Control Panel is part of the Electrical Housing Door and contains the Unit's Rotary Mains Isolator Switch and Run Light Indicator.

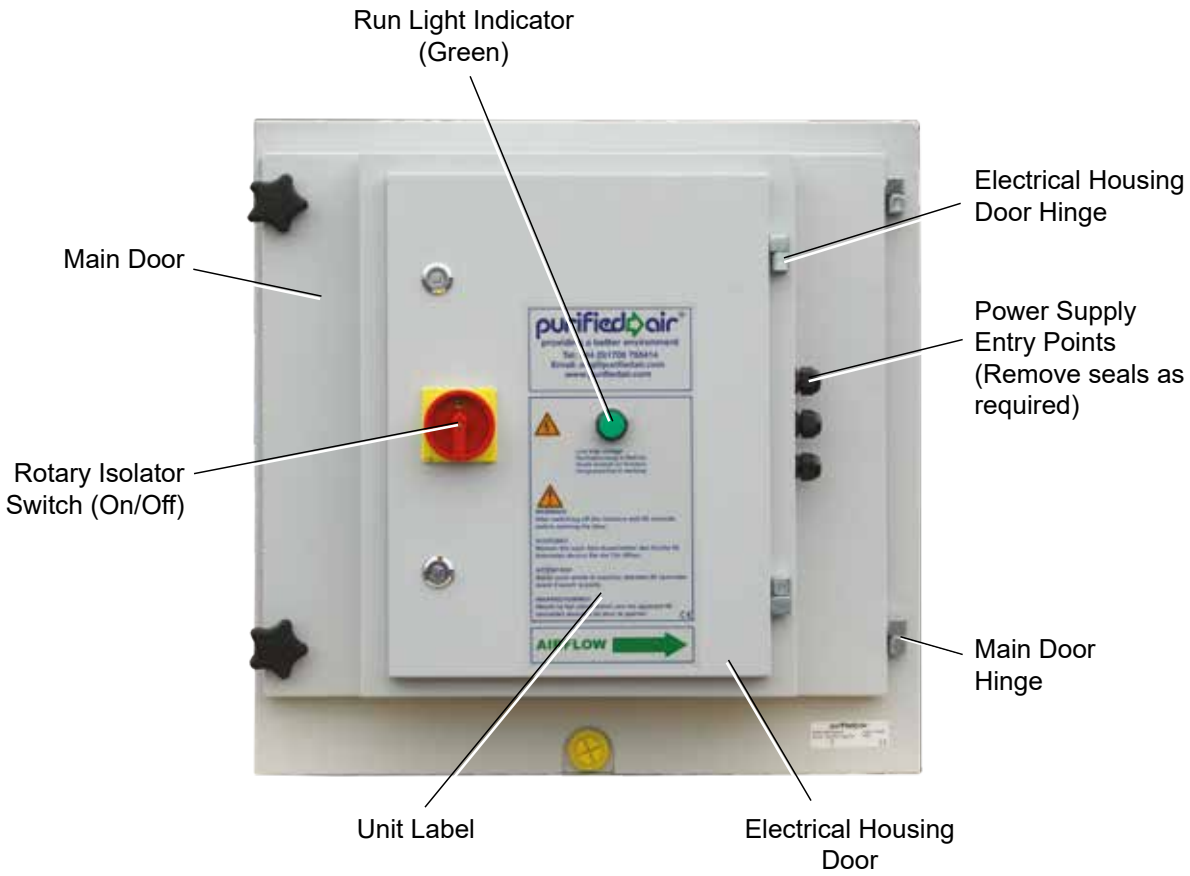

Figure 15 - Control Panel Components

5.2 Before Use

Before use, ensure that all safety precautions have been taken and that environmental conditions are suitable for operation of the Unit (see 1.5 Safety Warnings and Cautions on page 3).

5.3 Switching On

To start the Unit from the Control Panel on the Electrical Housing Door:

1. Turn the Rotary Mains Isolator Switch to the ‘On’ position.

   Note: The green Run Light Indicator will illuminate during normal operation.

   Regularly check that the green Run Indicator Lamp is illuminated when using the Unit as it indicates that the electrostatic filter is properly charged.

   WARNING

   Please contact your service agent if the green Run Light Indicator doesn’t illuminate when the Rotary Main Isolator Switch is in the ‘On’ position.

2. Check that the interfaced extractor fan is also running. Turn off the Unit if this is not the case and investigate further.

5.4 Arcing and Auto-Shutdown

Some arcing within the Unit during operation is normal.

If the problem persists, due to excess debris, the Unit will automatically cycle on and off until the problem clears or until a service visit is carried out.

Note: If excessive arcing occurs, the Unit will automatically shutdown and then restart after a short time.

5.5 Switching Off

To stop the Unit, turn the Rotary Mains Isolator Switch to the ‘Off’ position.

CAUTION!

After switching off the Unit, wait 60 seconds before opening the door to allow the static electricity charge to dissipate.

6. Fitting Stainless Steel Ioniser Blades

6.1 Fitting Stainless Steel Ioniser Blades to a Collector Cell

Some specifications require solid stainless steel spiked ioniser blades to be fitted, replacing the standard Ioniser Wires.

Figure 16 - Stainless Steel Ioniser Blade

The stainless steel spiked blades are made out of 0.7mm sheet stainless steel with a pressed ridge or spine down the centre.

WARNING!

The Ioniser Blade has sharp points so care should be taken when handling.

This modification can be made in the factory or, alternatively, an engineer can perform the replacement on site.

6.1.1 Replacing Ioniser Wires with Stainless Steel Ioniser Blades on Site

To replace the Ionisers Wires with Stainless Steel Ioniser Blades on site, please see the instructions below:

1. Turn the Rotary Mains Isolator Switch to the ‘Off’ position and wait for 60 seconds to allow the accumulated static electricity charge to dissipate.
2. Fully undo the two Star Knobs (anti-clockwise) and open the Main Door.
3. Slide out the Pre and Post Filters and, after making a note of the airflow direction arrow, slide out the Collector Cell.
4. Remove the existing Ioniser Wires by unhooking them from the Upper and Lower Ioniser Bars, pulling the unsprung end of each Ioniser Wire against the spring’s tension.
   Once the Ioniser Wires have been removed from the Collector Cell, there will be eight locating holes in each of the Upper and Lower Ioniser Bars.
5. Take the first Stainless Steel Ioniser Blade and locate its protruding lugs into both the Upper and Lower Ioniser Bars location holes.
6. Once in place, using a pair of long nosed pliers, carefully bend the lug down to secure the top of the Ioniser Blade into position on the Upper Ioniser Bar (see Figure 17 - Fitting Stainless Steel Ioniser Blades on page 25).

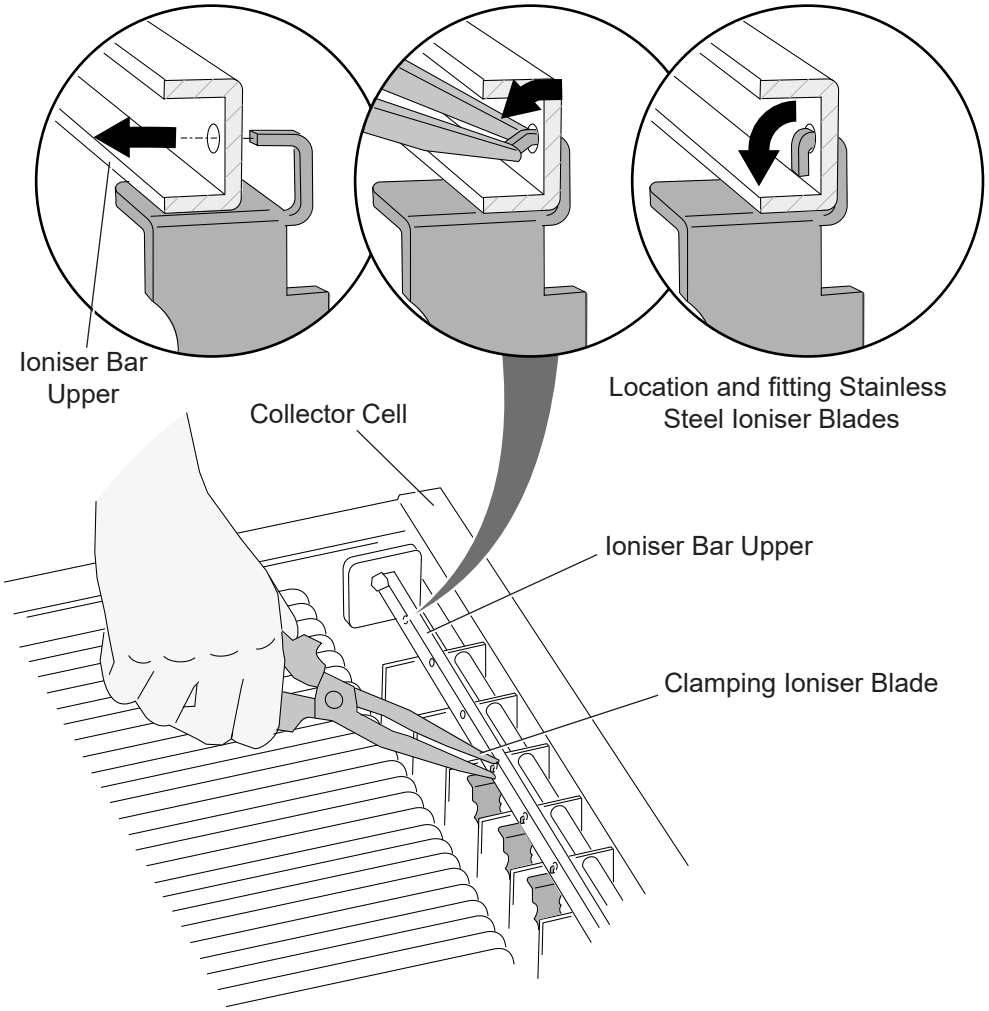

Figure 17 - Fitting Stainless Steel Ioniser Blades

7. Turn the Collector Cell upside down, being careful to keep the Ioniser Blade's lower protruding lug located in the Lower Ioniser Bar's location hole, and carefully bend the lug down to secure the bottom lug of the Ionizer Blade.
   The blade should now be securely attached to the Collector Cell's Upper and Lower Ioniser Bars.
8. Turn the Collector Cell back upright and repeat the steps 5, 6 and 7 above for each Ioniser Blade until all eight have been securely fitted.

The Collector Cell is now ready to be placed back into the Main Chassis:

1. Replace the Pre and Post Mesh Filters and replace the Collector Cell back into the Main Chassis.

   Note: Make sure that the air flow direction arrow, noted in step 3 on page 24, is pointing in the correct direction.
2. Close the Main Door and replace and tighten the two Star Knobs making sure that the Main Door is tightly closed.
3. Turn the Rotary Mains Isolator Switch to the 'On' position.

7. Maintenance and Cleaning

7.1 Introduction

If you carry out the simple cleaning and maintenance described below, at the prescribed intervals, paying attention to the associated Warnings and Cautions, then any problems will mostly be detected and corrected before they result in a total breakdown of the Unit.

The indicated maintenance intervals can vary depending on specific working and local environmental conditions. It is therefore recommended that the Unit is thoroughly inspected annually in addition to the indicated periodic maintenance. Please contact your service agent to arrange this.

WARNING!

Overdue maintenance can lead to fire.

Always switch OFF the Unit and isolate the electric supply before carrying out the activities below.

Do not carry out any service, maintenance or repairs to the Unit before it has been protected against unintended starting by switching off and isolating the electrical supply.

7.2 Maintenance and Cleaning Schedule

Basic maintenance activities can be carried out by the user. Please see the table below for the optimum frequency for such activities.

Note: Other activities are strictly reserved for qualified personnel.

Basic Maintenance Activities	Frequency
Clean the outside of the Unit with mild detergent	Every 6 months
Check the door sealing material (see 7.3.2 on page 27)	Every 12 months
Clean the inside of the Unit and remove dust/ grease from the filter compartment (see 7.3.2 on page 27)	From once a week to once every 3 months depending on the degree of pollution.
Clean the Mesh Pre-filter, ESP Collector Cell and the Mesh Post-filter and check for damage (see 7.3.3 on page 28 and 7.3.4 on page 28)	From once a week to once every 3 months depending on the degree of pollution.

7.3 Cleaning and Maintenance Tasks

Clean or replace the Mesh Filters and Collector Cell and clean the Main Chassis at the prescribed intervals mentioned in Maintenance and Cleaning Schedule on page 26 or:

- If the Mesh Filters and/or Collector Cell are damaged.
- When the Collector Cell starts to make a crackling sound (arcing).
- When the filtering and extraction performance of the Unit starts to decline.

It is a matter of experience to determine when the Unit needs to be cleaned, since the nature and the degree of pollution depends strongly on factors such as the particular location, humidity, and intensity of use etc. Nevertheless, the filters and Main Chassis should be cleaned regularly at intervals ranging from once a week to once every 3 months using the procedures outlined in the sections below:

7.3.1 Removing the Mesh Filters and Collector Cell

Start the cleaning procedure by removing the Mesh Filters and Collector Cell from the Main Chassis:

1. Isolate the Unit from the mains power supply by turning the Rotary Mains Isolator Switch to the ‘Off’ position.
2. Allow at least 60 seconds for any static electrical charge to dissipate.
3. Double check that the mains power supply has been isolated.
4. Unscrew the top and bottom Star Knobs on the main Door Assembly anti-clockwise and open it.
5. Remove the Mesh Pre-Filter, Collector Cell and the Mesh Post-Filter in this order.
6. Remove the Filter Carrier.

7.3.2 Cleaning the Main Chassis

Having removed the Mesh Filters (pre and post) and the Collector Cell:

1. Remove any accumulated grease from the sump; depending on its viscosity, either via the Drain Plug (see Figure 5 - Electrostatic Precipitator Unit - Main Chassis Components on page 10) or by scooping and scraping it out.
2. Spray the sump with a high quality degreaser and wipe over the sump’s surfaces with a suitable cloth or paper towels.
3. Clean the electrical contact points on the inside of the Door Assembly, using a high quality degreaser and a suitable cloth or paper towels, ensuring that they are free of contaminants/grease.
4. Ensure that the rubber door seal is undamaged and free from contaminants/grease, cleaning with warm soapy water if necessary.
5. Clean the Filter Carrier and Backplate, using a high quality degreaser and a cloth, and replace in the Unit.

7.3.3 Cleaning the Mesh Filters (pre and post)

Clean the Mesh Filters as follows:

1. Clean the Mesh Filters (pre and post) in hot water (at approx. 60°C) to which a detergent solution has been added. This treatment can be repeated several times. A pressure washer can also be used to clean the filters.
2. Allow the Mesh Filters to dry completely after cleaning before re-inserting into the Unit.

7.3.4 Cleaning the Collector Cell

Clean the Collector Cell as follows:

1. Clean the Collector Cell in hot water (approx. 60°C) to which a detergent solution has been added.

WARNING

Although the Collector Cell can be cleaned using a pressure washer, extreme care must be exercised to avoid damaging or distorting the plates.

2. Check the Ioniser during washing for broken Ionisation Wires.

   Note: If fitted, broken ionisation wires can simply be replaced by hooking the sprung end of the new wire over the support post, pulling the wire against the spring's tension and attaching the other end of the wire to the opposite post, having first removed the broken wire.

3. Whilst washing the Collector Cell, check to see if any of the Collector Cell's plates have been bent.

   Note: If a bent plate is found, it can normally be straightened by either carefully applying pressure with a screwdriver or by using a pair of long nosed pliers.

   If the Collector Cell is beyond repair, please contact Purified Air to purchase a new one.

4. Allow the Collector Cell to dry completely after cleaning before re-inserting into the Unit.

7.3.5 Replacing the Collector Cell and Pre and Post Mesh Filters

Replace the Collector Cell and pre and post Mesh Filters as follows:

1. Replace the Collector Cell.

   Note: If the Unit has more than one Collector Cell, ensure that the electrical connections between them are making contact.

2. Slide the Mesh Filters (pre and post) into their previous positions in the Collector Cell and Filter Carrier.

INFORMATION

Ensure that the Collector Cell is correctly orientated with the extraction duct's airflow, as indicated by the arrow engraved on the Collector Cell.

Pay due attention to the position of the contact pin and contact spring on the Collector Cell which should connect with the contact discs on the door when it is closed.

3. Close the Main Door and refit the top and bottom Star Knobs.
4. Tighten the Star Knobs clockwise sufficiently to ensure a good seal between the Main Door and the Main Chassis of the Unit.

   Note: It may be necessary to push the Main Door inwards, against the seal, onto the Main Chassis of the Unit whilst tightening the Star Knobs to enable them to be tightened sufficiently to ensure an adequate seal.
5. Switch the Unit On as normal. The green Run Light Indicator should illuminate.

INFORMATION

After the Unit is turned on, you may briefly hear a clicking or arcing as the plates in the Collector Cell build up a charge. This is perfectly normal.

WARNING

Should the clicking or arcing persist or the green Run Light Indicator go out, the Unit has a fault.

In this case, switch off the Unit and consult a qualified service technician.

7.4 Servicing

Purified Air or their designated distributor will be happy to carry out regular servicing of the Unit and offer Preventative Maintenance Contracts for all installations of their equipment.

Please contact their Head Office for full details:

service@purifiedair.com

Freephone: 0800 018 4000

8. Troubleshooting

If the Unit does not function correctly, consult the checklist below to see if you can correct the error yourself.

INFORMATION

A number of problems in the checklist below can also be caused by defects in other equipment connected to the Unit. This manual only deals with problems and solutions directly related to the Unit itself.

Problem	Possible Cause	Solution
Insufficient Extraction Capacity	Mesh Filters clogged or saturated.	Clean the filters.
	A breach/hole in the ducting.	Check and replace sealing material/repair hole.
Dust or smoke from the extraction outlet and/or green Run Light Indicator is not illuminated.	Collector Cell is saturated or mounted incorrectly causing short-circuiting.	Clean the Collector Cell and mount correctly.
	Poor/dirty electrical contacts in the Collector Cell.	Check and clean/repair.
	Short-circuit in the Collector Cell (caused by bent plates).	Check and repair.
Unit makes a cracking sound (= short circuit).	Collector Cell incorrectly mounted.	Mount correctly.
	Collector Cell heavily polluted.	Clean Collector Cell.
	Collector Cell not totally dry.	Allow thorough drying after cleaning.
	Bent Collector Cell plates.	Repair.
	Bent or broken ionisation wires (see 6. Fitting Stainless Steel Ioniser Blades on page 24).	Replace.
	Metal particles in Collector Cell.	Clean Collector Cell.
Unit switches off or will not start when clean collectors are installed during service.	The collector cell could appear dry but could have traces of water behind the insulators or secreted within the collector.	Run the extract system for one hour with the ESP switched off. This should allow any excess water to evaporate. After this period, try to restart the unit. If it still fails to start contact the supplier.

CAUTION

Should it not be possible to correct the error, consult a qualified service engineer.

9. Spare Parts List and Components Illustration

Item Number	Item Description	Part Number
	Collector	
1	Collector Cell Unit	ESP-1601-CC
2	Mesh Filter Element	ESP-1501-MF
	Collector Cell	
3	Ioniser Wire with springs (8 per pack) (Not Shown)	ESP-1602-IW
4	Push Button Brass HV contact	ESP-1603-BB
5	HV Spring contact	ESP-1604-SC
6	Insulator HV Black Thermoset Square	ESP-1605-IS
8	Stainless Steel Spiked Ioniser Blades (8 per pack) (Not Shown) (see 6 - Fitting Stainless Steel Ioniser Blades on page 24)	ESP-1607-SI
	Door	
9	Complete ESP Door & Electronics	ESP-1701-CD
10	High Voltage Power Supply (HVPS) including HV cable (2 parts) + wiring loom for post 2014 models.	ESP-1750-HV
11	Door Hinge (15mm) (main door & electrical door)	ESP-1702-DH
12	Door safety interlock switch	ESP-1703-DS
13	Rotary Mains Isolator Switch	ESP-1704-MS
14	HV Output Terminal Contact Disc on door (ceramic)	ESP-1705-OT
15	Clear PVC dome covers for HV output terminals.	ESP-1706-DC
16	HV Cable (2 pcs per set) (Not Shown)	ESP-1707-HC
17	LED Run Lamp (green 230V)	ESP-1708-LG
18	Door Star Knobs	ESP-1709-SK
19	Drain Plug	ESP-1710-DP
20	Rubber Door Seals (set of 6)	
21	Pictograms, Warning and Instruction Labels	
	Upgrades	
	HVPS (PWM200) replaces components in older models such as HF Driver, HV Transformer & HV short circuit protector.	These older parts are all now superseded
	HVPS Conversion kit for pre-2008 and pre-2014 Models.	ESP-HVPSCONV1
	HVPS Conversion kit for post-2014 Models. (ESP____EI)	ESP-HVPSCONV2
	BMS Kit fitted prior to leaving factory	ESP-1801-BMS
	BMS Kit fitted on site	ESP-1802-BMS

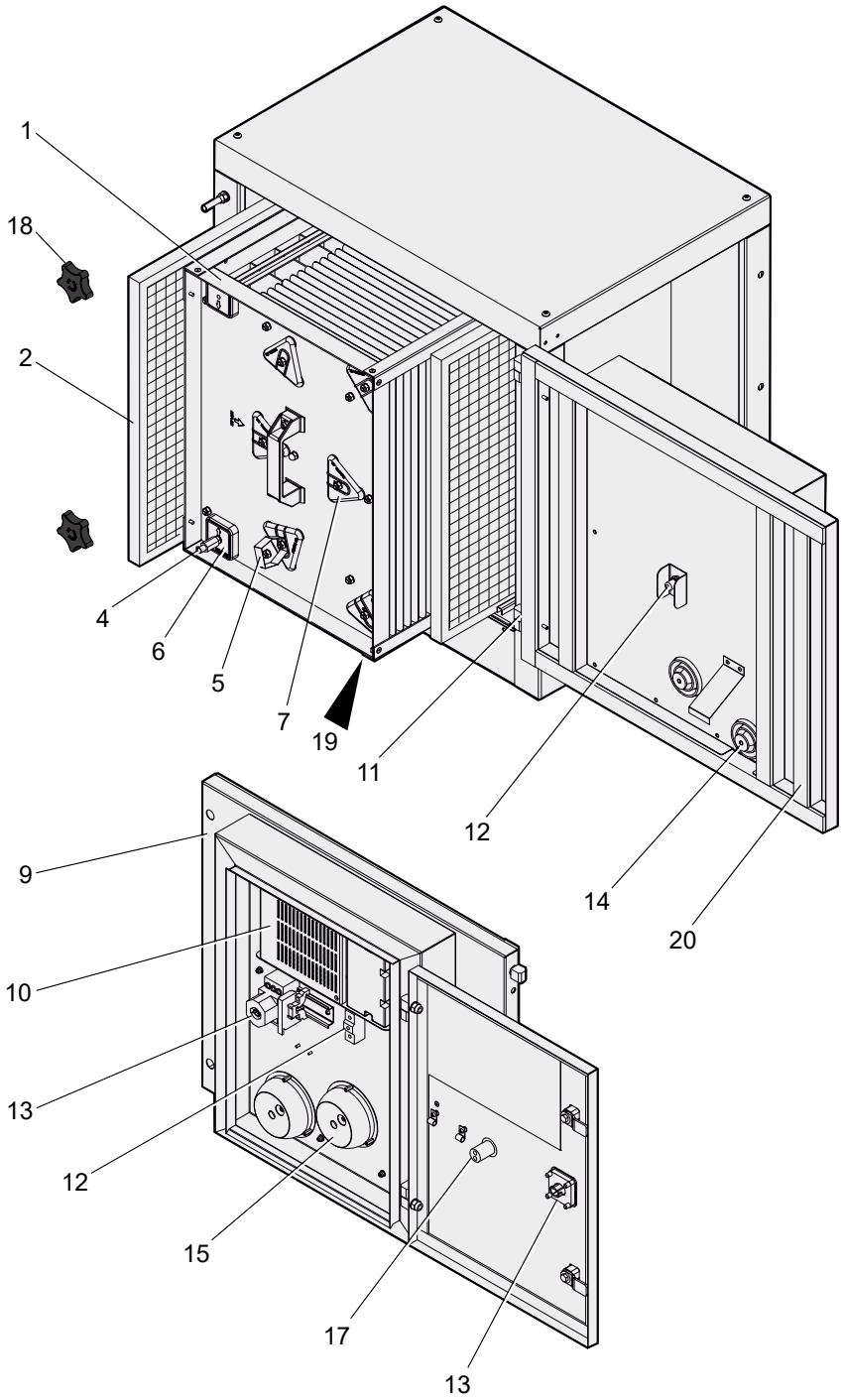

Figure 18 - Parts List Components Illustration

9.1 Spare Parts Ordering

All parts listed in the 9. Spare Parts List and Components Illustration on page 31 are available as spare parts.

Please quote the Part Number when ordering.

10. Wiring Diagram

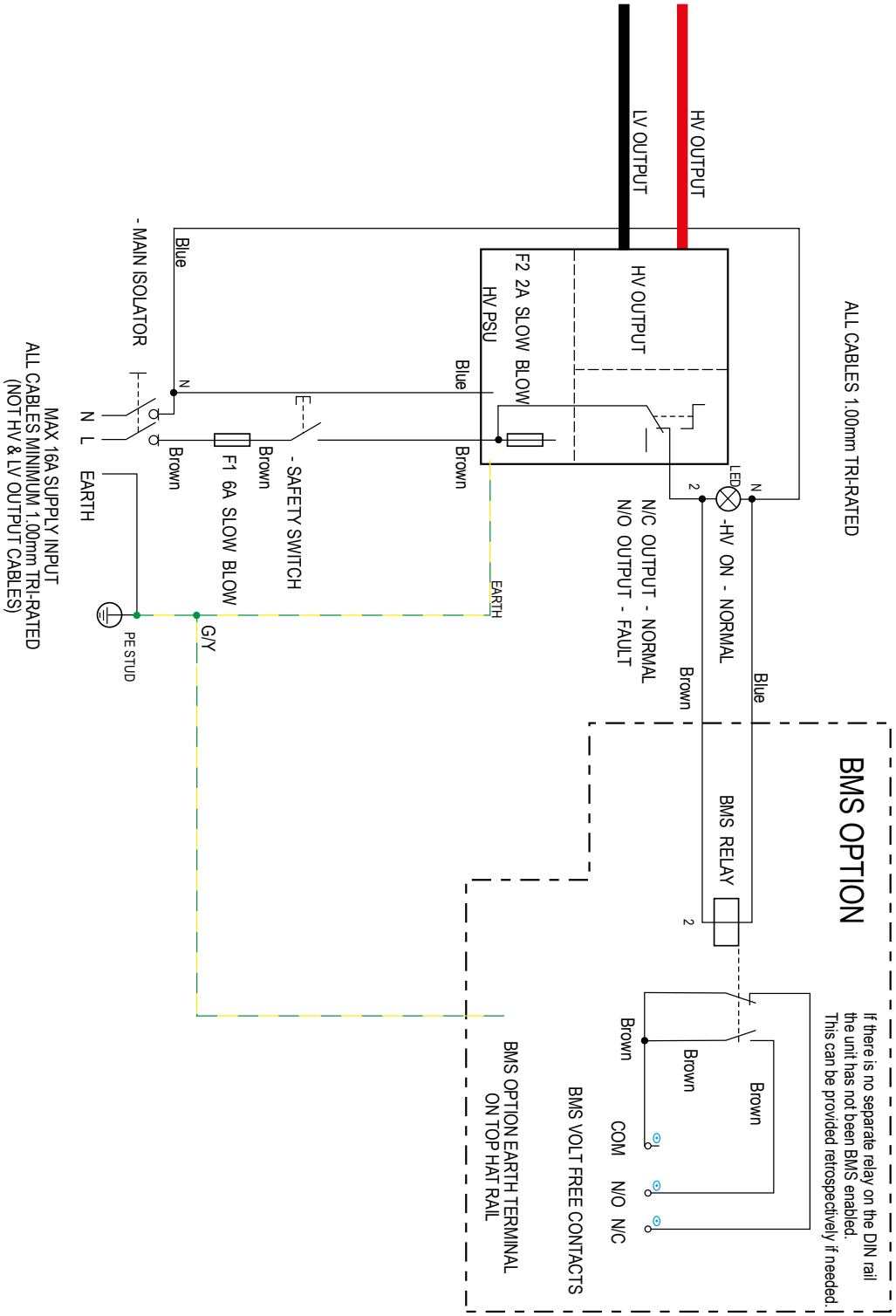

Figure 19 - Unit Wiring Diagram

11. Equipment Disposal

11.1 Packaging Material Disposal

INFORMATION

The Unit's Packaging materials are manufactured from recyclable materials in accordance with applicable local regulations.

The purpose of the packaging is to protect the Unit during transport. It consists of the following substances that can be reused:

- Cardboard (corrugated)
- Wood (untreated)

Do not dispose of the packaging material as general industrial waste.

11.2 Used Unit Disposal

Units which you would like to dispose of may still contain valuable substances and materials. Do not dispose of the Unit as general industrial waste.

12. Contact Details

At Purified Air, we pride ourselves on our excellent levels of customer service and maintenance.

12.1 Nationwide Coverage in the UK

We can offer nationwide coverage with teams of directly employed service engineers working out of our UK hubs.

For all UK Service and Maintenance enquiries, please contact via:

service@purifiedair.com

0800 018 4000

12.2 Service and Maintenance Contracts

With every installation, we offer the opportunity to sign up to one of our service and maintenance contracts. These are structured to suit individual needs, on a post pay basis with the customer only being invoiced after each service, saving them both time and money against ad hoc servicing requests.

12.3 Dependability

Whether you have our commercial kitchen exhaust filtration equipment in your restaurant, cafe or take away, you can rest assured that we will always be there when you need us.

12.4 Global Sales

For all installations of our equipment outside of the UK, please refer back to your designated distributor.

13. Warranty Statement

Please visit the 'Support' section on the Purified Air website to register for your one year warranty:

www.purifiedair.com

Your new Electrostatic Precipitator is guaranteed against the cost of breakdown repairs for one year from the date of the original purchase.

The manufacturer does not accept any liability for damage to the Unit or personal injury caused by non-observance of the safety instructions in this manual or negligence during the installation, use, maintenance and repair of the models mentioned on the cover of this manual and any associated accessories.

What is covered?

- Repairs necessary as a result of faulty materials, defective components or manufacturing defect.
- The cost of functional replacement parts, but excluding consumable items.
- The labour costs of a Purified Air approved repairer to carry out the repair.

What is not covered?

- Transit, delivery or accidental damage or misuse and abuse.
- Any installation which fails to meet the installation, location and operating requirements and parameters outlined in this manual.
- Manufacturing defects only affecting the Unit's cosmetic appearance.
- Consumable items including but not limited to pre and post Mesh Filters, Collector Cell and Ionisation Wires (see 6. Fitting Stainless Steel Ioniser Blades on page 24).
- Repairs required as a result of unauthorised repair or installation by anyone other than a Purified Air approved installer.
- Any damage caused to the Unit by its use by anyone other than authorised, trained and qualified users or personnel under the supervision and responsibility of authorised, trained and qualified users.
- Any damage caused to the Unit by incorrect servicing procedures.
- Use of the Unit in any application which is not specifically mentioned in this manual or approved, in writing, by the manufacturer.
- The guarantee is applicable only to new products and is not transferable if the product is resold.

Purified Air disclaims any liability for incidental or consequential damages.

The guarantee does not in anyway diminish your statutory or legal rights.

Please keep your purchase receipt or other proof of purchase in a safe place. You will need to have it should the product require attention under guarantee.

14. Certification

14.1 EC Declaration of Conformity

Purified Air Limited
Lyon House
Lyon Road
Romford
Essex RM12BG

Tel: +44 1708 755414
Fax: +44 1708 721488
Email: enq@purifiedair.co.uk
www.purifiedair.co.uk

EC Declaration of Conformity

Document Number: Doc ESP 1201

We, Purified Air Limited at above address, declare the products detailed below comply with the requirements of the following EU Directives,

- Low Voltage Directive 2005/95/EC
- Electromagnetic Compatibility Directive 2004/108/EC

Equipment description	*Electrostatic Precipitator*			
Make/Brand	*Purified Air*			
Model reference	ESP 1500EI	ESP 3000EI	ESP 4500EI	ESP 6000EI

Compliance of the equipment has been assessed with respect to the essential requirements and with reference to the following harmonised standards:

- EN 60204-1:2006 +A1:2009
- EN55014-1 :2006+A 1:2009
- EN 55014-2: 1997+ A2:2008
- EN 61000-3-2:2006 +A2: 2009
- EN 61000-3-3:2008

A technical file for this equipment is retained at the above address

Gareth Smith
Technical Director
Purified Air Limited
January 2016

Figure 20 - EC Declaration of Conformity

FreePhone (UK Only) 0800 018 4000
International +44 1708 755414

Purified Air Limited. Lyon House, Lyon Road, Romford, Essex. RM1 2BG

www.purifiedair.com ¦ enq@purifiedair.com