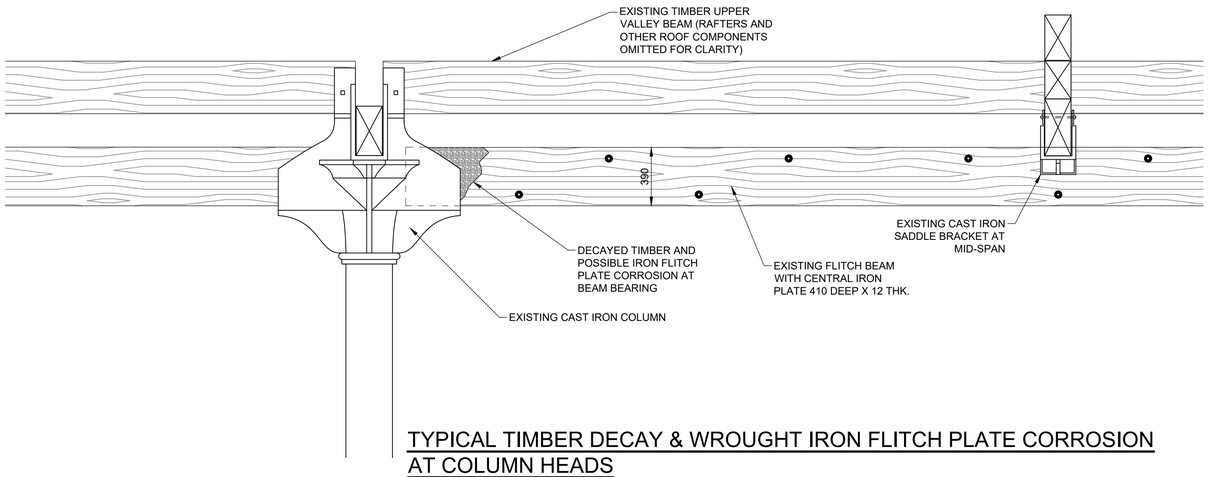


## TYPICAL TIMBER DECAY & WROUGHT IRON FLITCH PLATE CORROSION AT COLUMN HEADS

SCALE 1:20

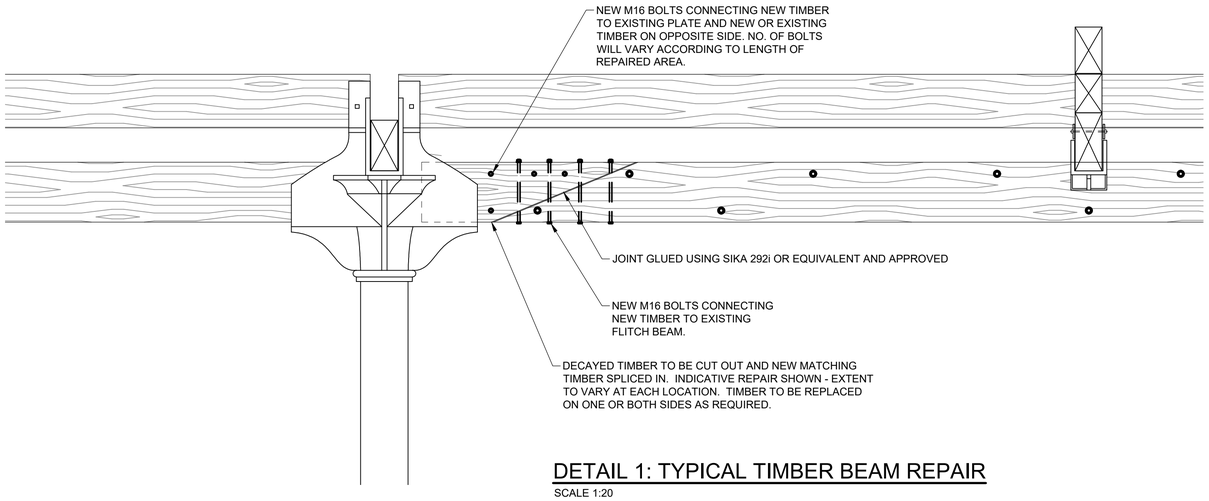


## DETAIL 1: TYPICAL TIMBER BEAM REPAIR

SCALE 1:20

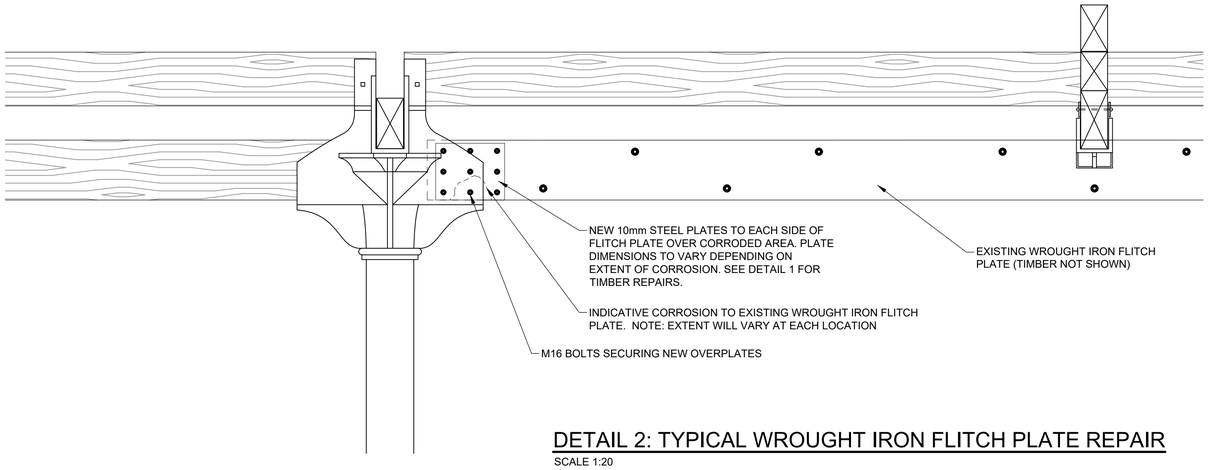


## DETAIL 2: TYPICAL WROUGHT IRON FLITCH PLATE REPAIR

SCALE 1:20

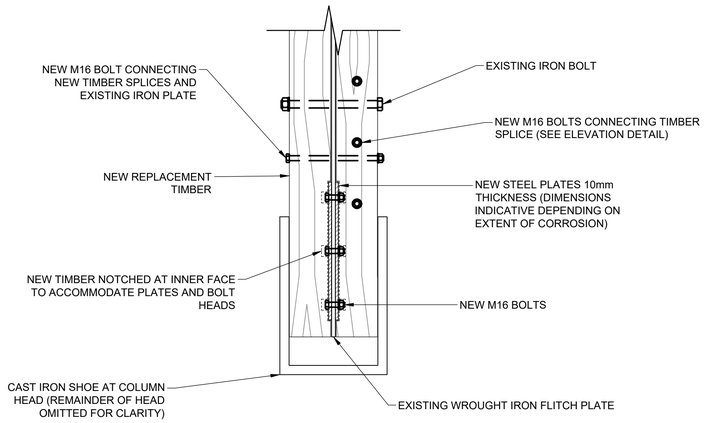


## DETAIL 3: TYPICAL WROUGHT IRON FLITCH PLATE REPAIR (PLAN)

SCALE 1:10

GENERAL NOTES

1. THIS DRAWING IS TO BE READ IN CONJUNCTION WITH ALL RELEVANT ARCHITECTS, ENGINEERS AND SPECIALIST DRAWINGS AND SPECIFICATIONS
2. DO NOT SCALE FROM THIS DRAWING IN EITHER PAPER OR DIGITAL FORM. USE WRITTEN DIMENSIONS ONLY.

**STRUCTURAL REPAIR NOTES**

1. THE CONTRACTOR IS RESPONSIBLE FOR THE DESIGN AND INSTALLATION OF TEMPORARY WORKS. THEIR PROPOSALS MUST BE SUBMITTED TO THE STRUCTURAL ENGINEER SUFFICIENTLY IN ADVANCE OF THE WORKS STARTING TO PERMIT COMMENT. UNDER NO CIRCUMSTANCES SHOULD ANY STRUCTURAL ALTERATIONS BE CARRIED OUT PRIOR TO THE STRUCTURAL ENGINEER COMMENTING ON THE CONTRACTORS TEMPORARY WORKS PROPOSALS.
2. AT EACH REPAIR LOCATION, THE CONTRACTOR MUST CLEAN BACK THE WROUGHT IRON FLITCH PLATE TO ALLOW ASSESSMENT BY THE SE OF REMAINING THICKNESS AND TO CONFIRM THE EXTENT OF OVERPLATING REQUIRED.
3. NEW STEEL FLAT PLATE IS TO BE GRADE S275J.
4. SITE WELDING OR FLAME CUTTING IS NOT PERMITTED.
5. ALL NEW STEEL PLATES TO BE BLASTED CLEANED TO SA2.5 AND PAINTED WITH MACROPOXY M902 PRIMER BEFORE INSTALLATION. ANY DAMAGE INCURRED DURING FITTING TO BE RECOATED ON SITE.
6. WROUGHT IRON FLITCH PLATES EXPOSED IN REPAIR AREAS TO BE BE CLEANED BY SCRAPING AND WIRE BRUSHING TO ST2 STANDARD AND PAINTED WITH MACROPOXY M902 PRIMER.
7. ALL BOLTS & NUTS TO BE GRADE 8.8 AND HOT-DIP GALVANISED.
8. ALL NEW TIMBER FOR TRUSS REPAIR TO BE TREATED. TIMBER GRADE TO BE GRADE C24 to BS 5268 OR GRADE SS TO BS 4978. SPECIES TO BE PINUS SYLVESTRIS OR PSEUDOTSUGA MENZIESII.
9. SEE CONISBEE DRAWINGS S-1025 AND S-1026 FOR REPAIR LOCATIONS.

**NOT FOR CONSTRUCTION**

| Rev | Date | Description | Drawn | Check |
|---|---|---|---|---|
| P3 | 30.07.21 | PRELIMINARY ISSUE | SW | KC |

conisbee | Consulting Structural Engineers Consulting Civil Engineers
London • Cambridge • Norwich
1-5 Offord St London N1 1DH
Telephone 020 7700 6666
www.conisbee.co.uk

Drawing Status
PRELIMINARY

Project
SCIENCE & INDUSTRY MUSEUM, MANCHESTER

Title
POWER HALL REPAIRS
FLITCH BEAM REPAIR

Drawing No
**180426-CON-PH-RF-DR-S-4110**

Date DEC 2019
Scale 1:10,1:20
Drawn SW
Engineer SW
Project No **180426**
Revision **P3**