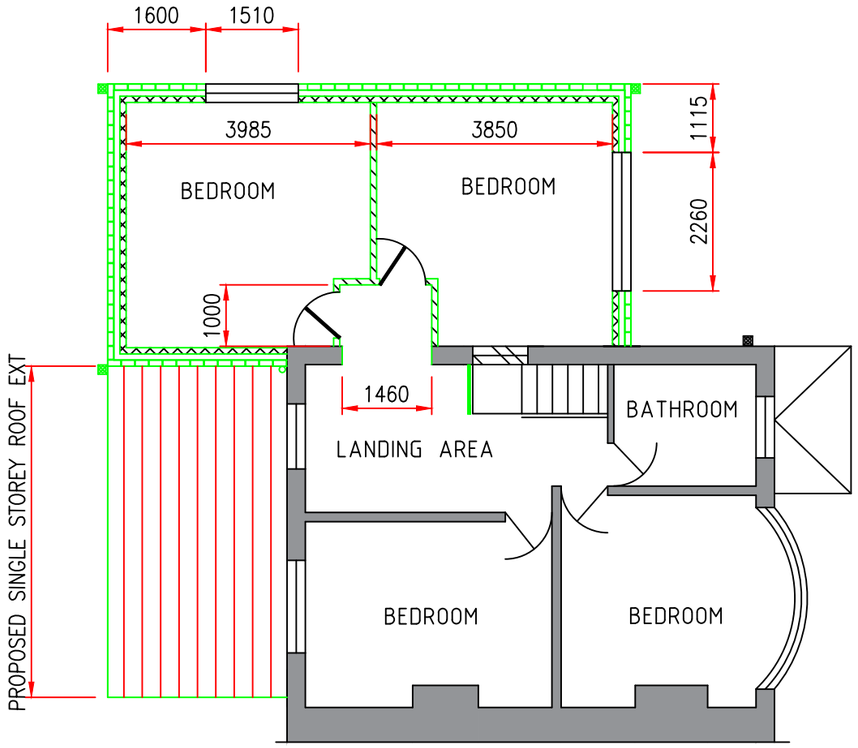

PROPOSED 2ND FLR PLAN

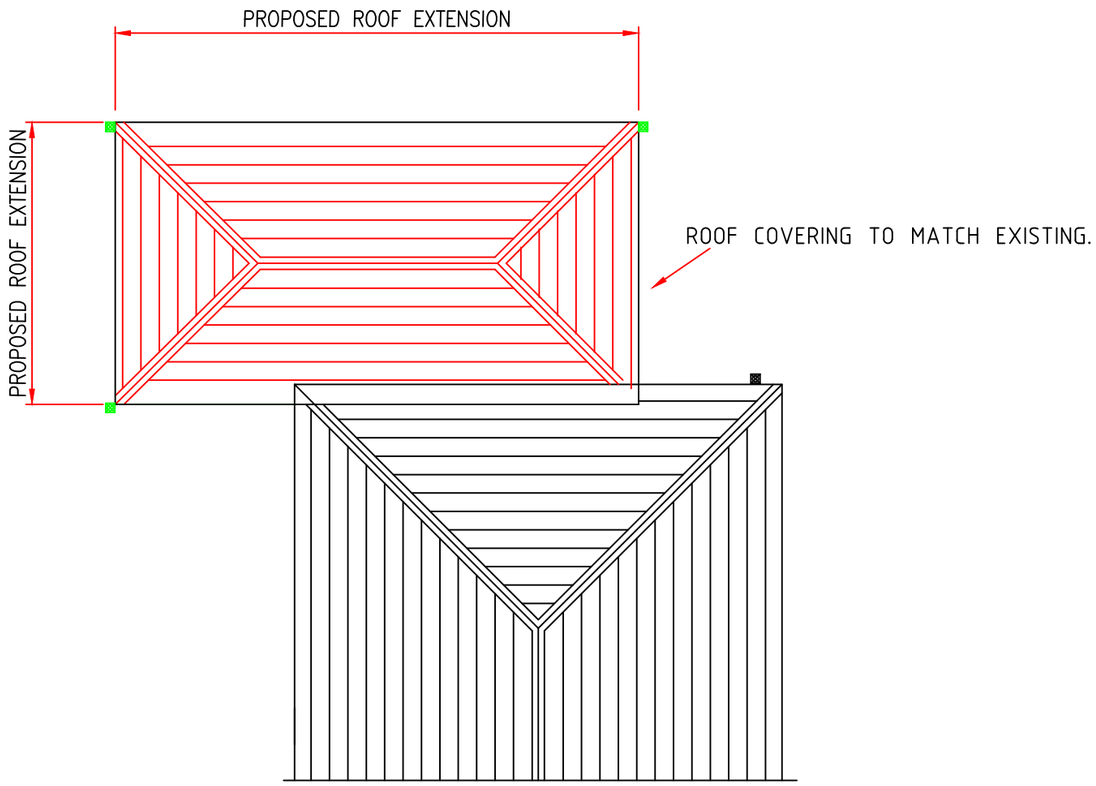

PROPOSED ROOF

REVISION	DESCRIPTION	DATE
A	ISSUED FOR PLANNING	2021

PROJECT

PROPOSED SINGLE/TWO STOREY REAR/SIDE EXTENSION
AT
266 YEW TREE ROAD,
MANCHESTER,
M14 6BT

DRAWING SIZE

A3

TITLE

PROPOSED 2ND FLR PLAN AND ROOF

PLOT SCALE	SCALE	DRN	DATE	DRAWING No.	REV
1=1	1:100	B.B.	2021	266 YEW TREE-07	A