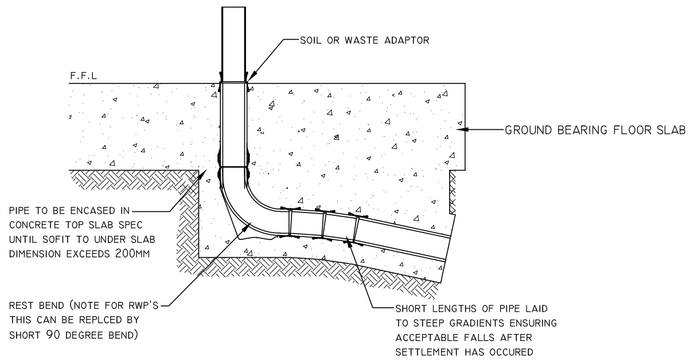

REST BEND CONNECTION CONNECTION DETAIL

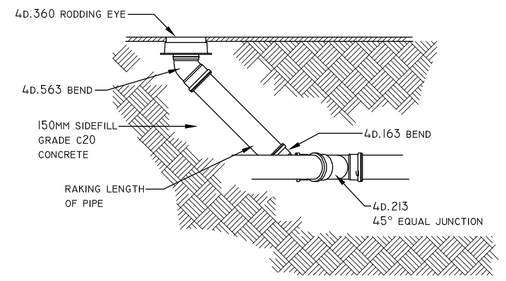

RODDING EYE DETAIL
N.T.S

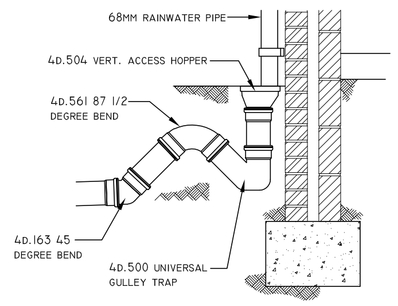

EXTERNAL R.W.P TO DRAIN
N.T.S

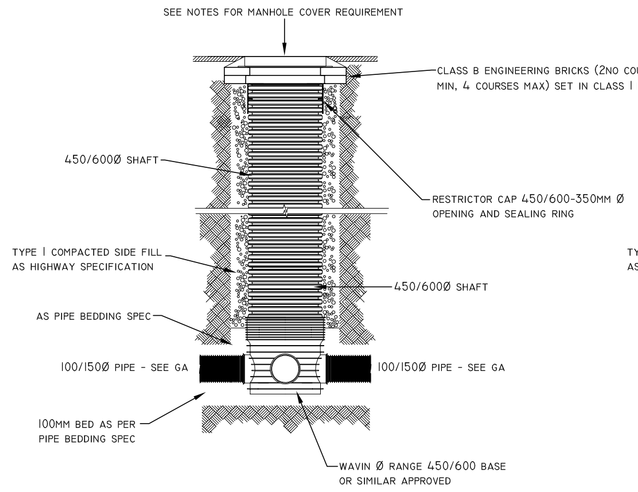

TYPICAL SHALLOW 450/600Ø PPIC DETAIL
IN SOFT LANDSCAPED AREA
N.T.S

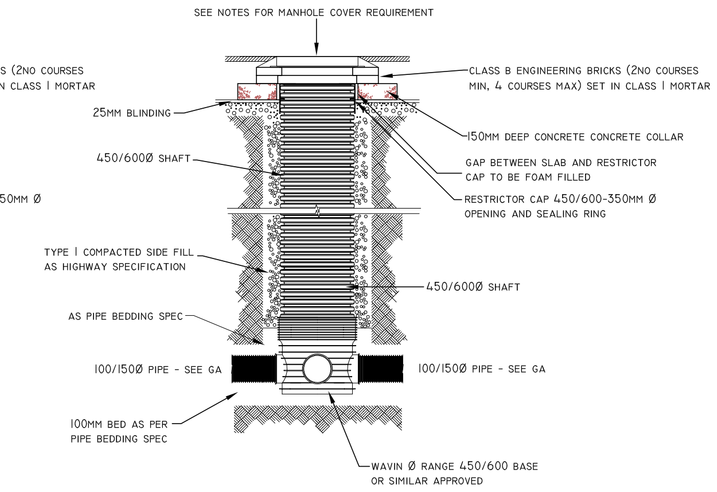

TYPICAL SHALLOW 450/600Ø PPIC DETAIL
IN HARD LANDSCAPED AREA
N.T.S

NOTES:

1. THIS DRAWING IS COPYRIGHT AND THE PROPERTY OF BELL MUNRO CONSULTING LTD. THE DRAWING MUST NOT BE REPRODUCED IN PART OR IN WHOLE WITHOUT PRIOR WRITTEN AUTHORITY.

2. THIS DRAWING MUST NOT BE SCALED BY EITHER CONTRACTORS OR OTHER CONSULTANTS ANY DIMENSIONAL OR SETTING - OUT DISCREPENCIES ARE TO BE REPORTED TO BELL MUNRO CONSULTING PRIOR TO CONSTRUCTION / FABRICATION COMMENCING.

3. THIS DRAWING MUST BE READ IN CONJUNCTION WITH THE RELEVANT BMC SPECIFICATIONS TOGETHER WITH THE APPROPRIATE ARCHITECTS AND SERVICES CONSULTANTS DRAWINGS AND SPECIFICATIONS.

4. FOR DRAINAGE GENERAL ARRANGEMENT SEE DRAWING J7328/EX01

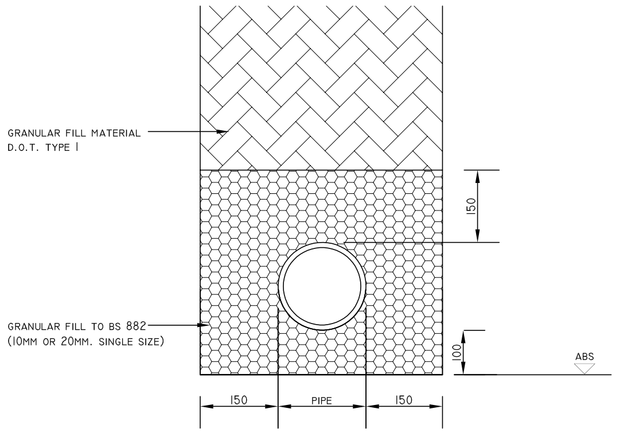

CLASS S BEDDING
N.T.S

ALL AREAS NOT REQUIRING CLASS Z BEDDING

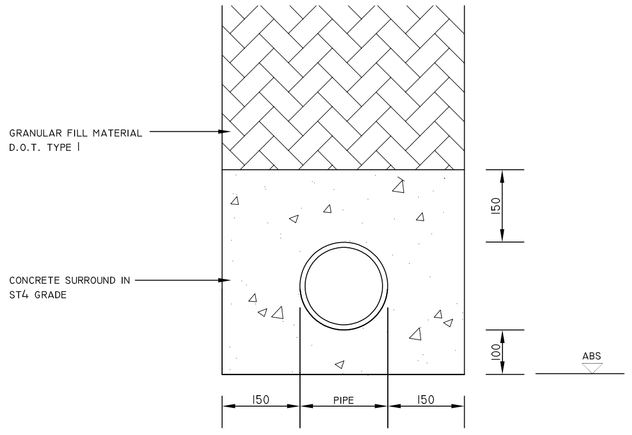

CLASS Z BEDDING
N.T.S

UNDER EXTERNAL AREAS WHERE PIPE CROWN IS LESS THAN 750MM BELOW SURFACE OF AREAS ACCESSIBLE TO TRAFFIC OR LESS THAN 400MM BELOW SURFACE IN ANY OTHER AREA. (N.B. FORM VERTICAL CONSTRUCTION JOINTS AT FACE OF ALL FLEXIBLE PIPE JOINTS IN 18MM COMPRESSIBLE BOARD)

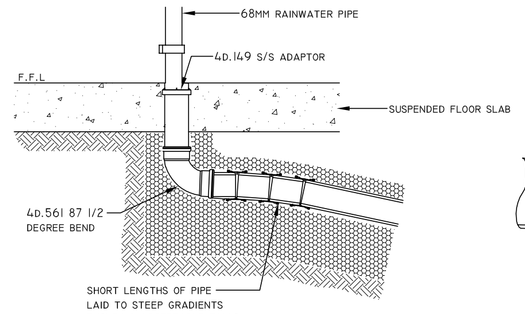

INTERNAL RWP TO DRAIN
N.T.S

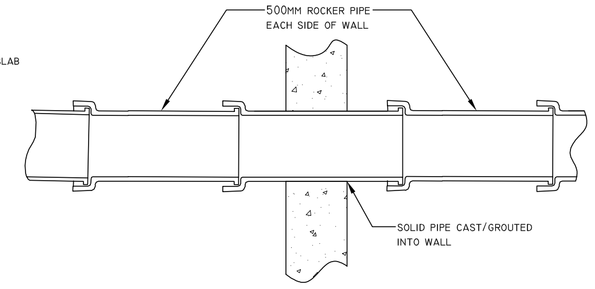

ROCKER PIPE DETAIL
N.T.S

TO BE USED WHERE PIPES CROSS THROUGH WALLS OR OTHER SOLID OBJECTS, OR PASS INTO CONCRETE MANHOLES, OR CHANGE FROM CLASS S TO CLASS Z BEDDING

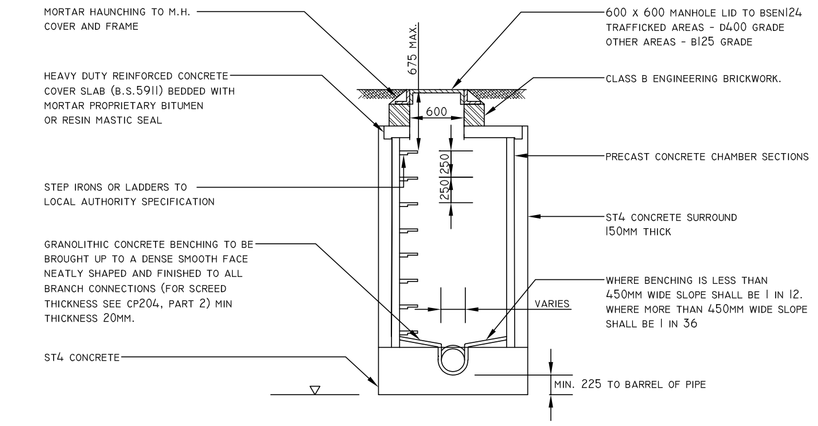

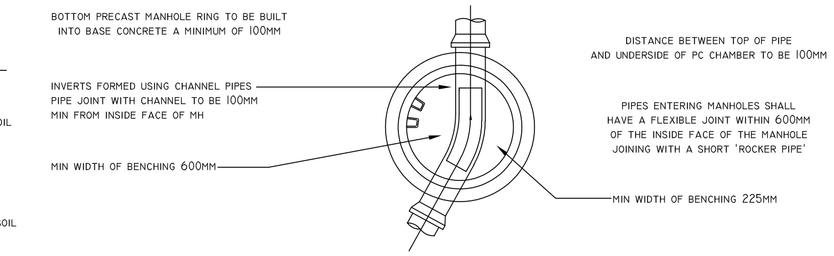

GENERAL CONCRETE MANHOLE DETAIL FOR CL-IL OF < 3.0M
N.T.S

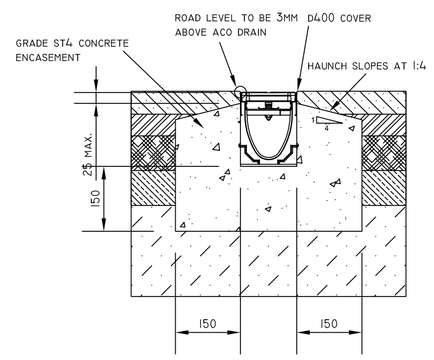

TYPICAL ACO DETAIL
N.T.S

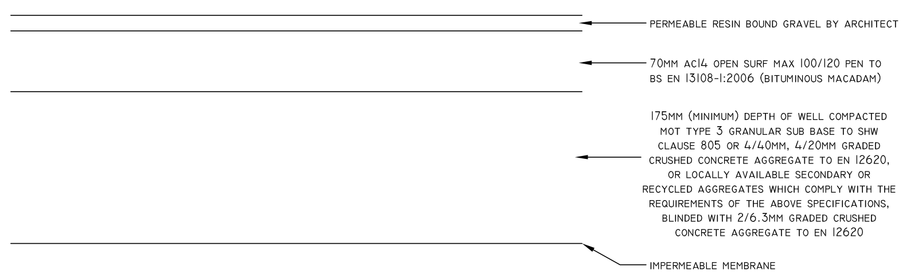

TYPICAL DRIVEWAY DETAIL
N.T.S

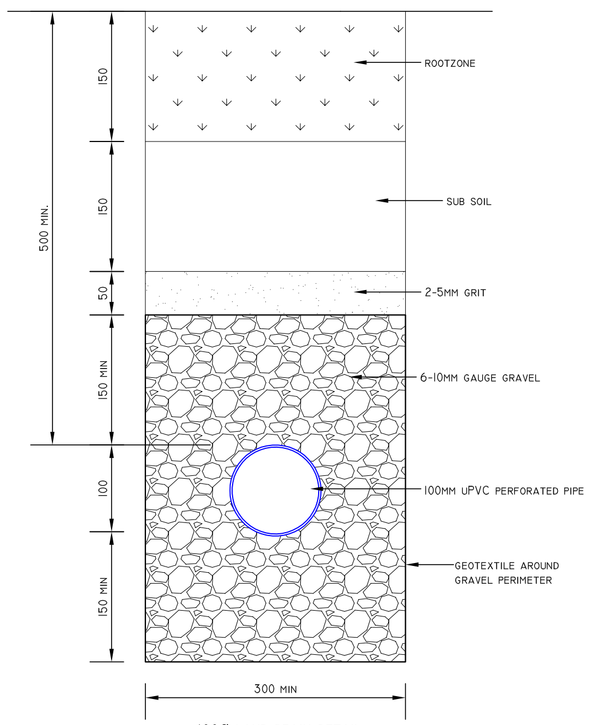

100Ø LAND DRAIN DETAIL
N.T.S

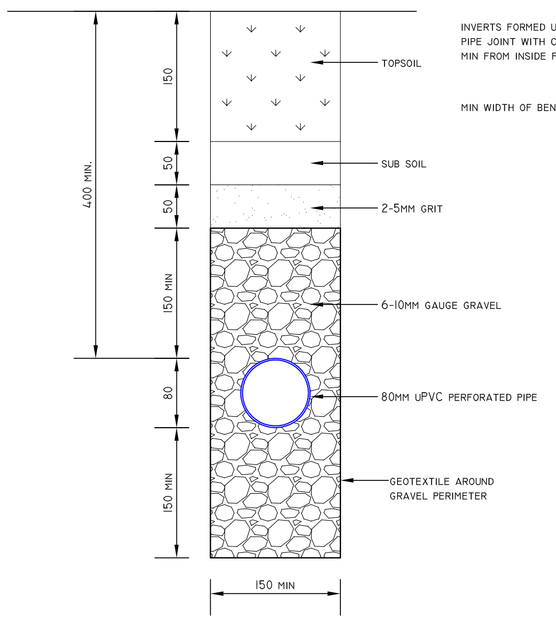

80Ø LAND DRAIN DETAIL
N.T.S

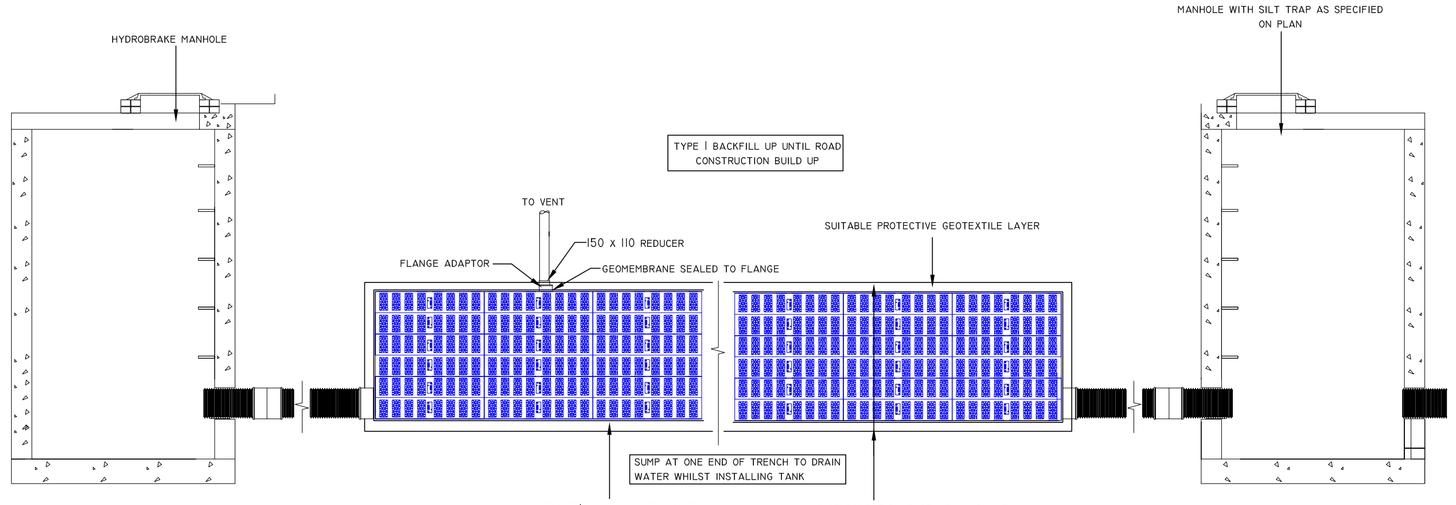

LONGITUDINAL SECTION THROUGH ATTENUATION
N.T.S

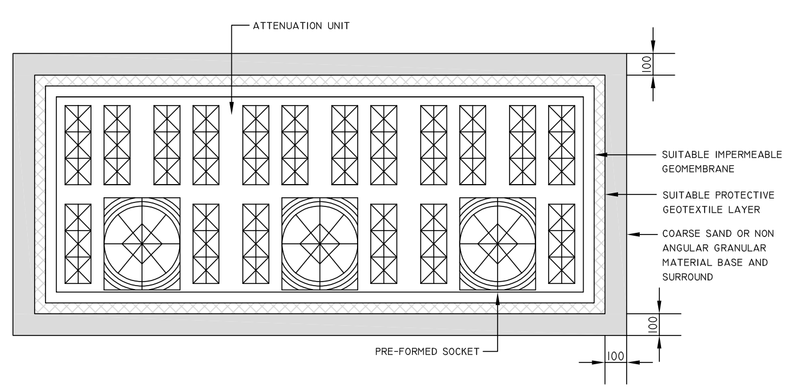

SECTION THROUGH ATTENUATION
N.T.S

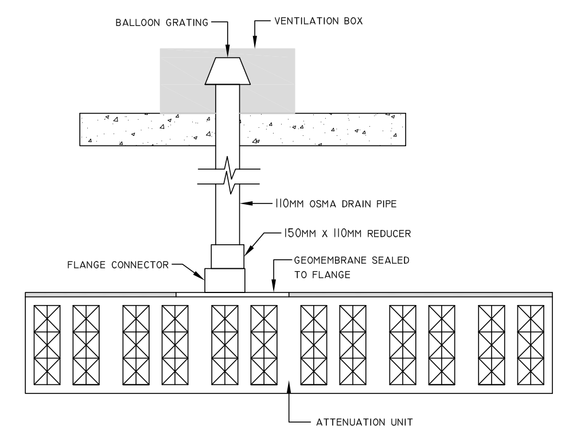

AIR VENT DETAIL
N.T.S

PRELIMINARY

--	INITIAL ISSUE	30.07.21	AM
REV	COMMENTS	DATE	BY

BMC

BELL MUNRO CONSULTING LTD

CONSULTING CIVIL & STRUCTURAL ENGINEERS
TURING HOUSE
5 ARCHWAY
MANCHESTER
M15 5RL
TEL: 0161 2098032
FAX: 0161 2098033
EMAIL: CONSULTING@BELLMUNRO.CO.UK
WWW.BELLMUNRO.CO.UK

CLIENT: HENEGHAN DEVELOPMENTS

PROJECT: LAND BEHIND 10 CRANMER, DIDSBURY

TITLE: PROPOSED DRAINAGE DETAILS

DRAWN BY:	CHECKED BY:	SCALE:	DATE:
AM	CM	SHOWN	07.21

DRAWING NUMBER: J7328/EX02

REVISION: -